SERVICE MANUAL
INSPEKTIONSHANDBUCH
MANUEL D'ENTRETIEN
MANUALE DI MANUTENZIONE
モーターサイクル整備説明書
MANUAL DE MANTENIMIENTO

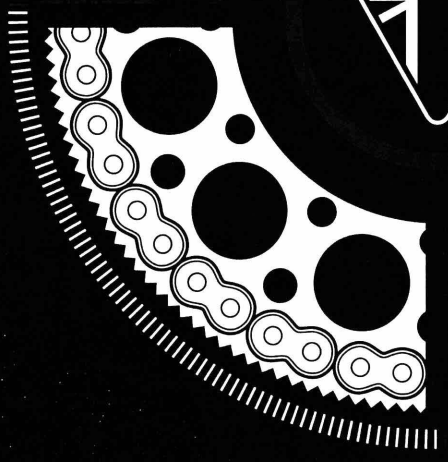

ROCKET III
ROCKET III CLASSIC
ROCKET III TOURING
ROCKET III ROADSTER

Triumph Rocket III, Rocket III Classic, Rocket III Touring and Rocket III Roadster Motorcycle Service Manual

Table of Contents

Introduction	v
General Information	1
Scheduled Maintenance	2
Cylinder Head	3
Clutch	4
Crankshaft	5
Bevel Box and Drive Shaft	6
Balancer	7
Transmission	8
Lubrication	9
Engine Removal and Refit	10
Fuel System/Engine Management	11
Cooling	12
Front Suspension	13
Rear Suspension	14
Brakes	15
Wheels/Tyres	16
Frame and Bodywork	17
Electrical System	18

This page intentionally left blank

Introduction

Table of Contents

How to use this manual vi
Warnings, Cautions and Notes vi
Tampering with Noise Control System Prohibited vii
References vii
Dimensions vii
Repairs and Replacements viii
Force viii
Edges viii
Tightening procedure viii

This manual is designed primarily for use by trained technicians in a properly equipped workshop. However, it contains enough detail and basic information to make it useful to the owner who desires to perform his own basic maintenance and repair work. The work can only be carried out if the owner has the necessary hand and special service tools to complete the job.

A basic knowledge of mechanics, including the proper use of tools and workshop procedures is necessary in order to carry out maintenance and repair work satisfactorily. Whenever the owner has insufficient experience or doubts his ability to do the work, an authorised Triumph dealer must undertake all adjustments, maintenance, and repair work.

In order to perform the work efficiently and to avoid costly mistakes, read the text and thoroughly familiarise yourself with procedures before starting work.

All work should be performed with great care and in a clean working area with adequate lighting.

Always use the correct special service tools or equipment specified. Under no circumstances use makeshift tools or equipment since the use of substitutes may adversely affect safe operation.

Where accurate measurements are required, they can only be made using calibrated, precision instruments.

For the duration of the warranty period, an authorised Triumph dealer must perform all repairs and scheduled maintenance.

To maximise the life of your Motorcycle:

- Accurately follow the maintenance requirements of the periodic maintenance chart in the service manual.
- Do not allow problems to develop. Investigate unusual noises and changes in the riding characteristics of the motorcycle. Rectify all problems as soon as possible (immediately if safety related).
- Use only genuine Triumph parts as listed in the parts catalogue/parts microfiche.
- Follow the procedures in this manual carefully and completely. Do not take short cuts.
- Keep complete records of all maintenance and repairs with dates and any new parts installed.
- Use only approved lubricants, as specified in the owner's handbook, in the maintenance of the motorcycle.

How to use this manual

To assist in the use of this manual, the section title is given at the top.

Each major section starts with a contents page, listing the information contained in the section.

The individual steps comprising repair operations are to be followed in the sequence in which they appear.

Adjustment and repair operations include reference to service tool numbers and the associated illustration depicts the tool.

Where usage is not obvious, the tool is shown in use.

Adjustment and repair operations also include reference to wear limits, relevant data, torque figures, specialist information and useful assembly details.

Warnings, Cautions and Notes

Particularly important information is presented in the following form:

⚠ Warning

This warning symbol identifies special instructions or procedures which, if not correctly followed, could result in personal injury, or loss of life.

⚠ Caution

This caution symbol identifies special instructions or procedures which, if not strictly observed, could result in damage to or destruction of equipment.

Note:

- **This note symbol indicates points of particular interest for more efficient and convenient operation.**

Tampering with Noise Control System Prohibited

Owners are warned that the law may prohibit:

a) The removal or rendering inoperative by any person other than for purposes of maintenance, repair or replacement, of any device or element of design incorporated into any new vehicle for the purpose of noise control prior to its sale or delivery to the ultimate purchaser or while it is in use; and

b) the use of the vehicle after such device or element of design has been removed or rendered inoperative by any person.

References

References to the left hand or right hand side given in this manual are made when viewing the motorcycle from the rear.

Operations covered in this manual do not always include reference to testing the motorcycle after repair. It is essential that work is inspected and tested after completion and if necessary a road test of the motorcycle is carried out particularly where safety related items are concerned.

Dimensions

The dimensions quoted are to design engineering specification with service limits where applicable.

During the period of running-in from new, certain adjustments may vary from the specification figures given in this manual. These will be reset by the dealer at the 500 mile/800 km service, and thereafter should be maintained at the figures specified in this manual.

Repairs and Replacements

Before removal and disassembly, thoroughly clean the motorcycle. Any dirt entering the engine or other parts will work as an abrasive and shorten the life of the motorcycle. Particular attention should be paid when installing a new part, that any dust or metal filings are cleared from the immediate area.

Force

Common sense should dictate how much force is necessary in assembly and disassembly. If a part seems especially difficult to remove or install, stop and examine what may be causing the problem. Never lever a component as this will cause damage both to the component itself and to the surface being levered against.

Whenever tapping to aid removal of an item is necessary, tap lightly using a hide or plastic faced mallet.

Edges

Watch for sharp edges, especially during engine disassembly and assembly. Protect the hands with industrial quality gloves.

When replacement parts are required, it is essential that only genuine Triumph parts are used.

Safety features and corrosion prevention treatments embodied in the motorcycle may be impaired if other than genuine Triumph parts are fitted. In certain territories, legislation prohibits the fitting of parts not to the manufacturer's specification.

Tightening procedure

Generally, when installing a part with several bolts, nuts or screws, they should all be started in their holes and tightened to a snug fit, evenly and in a cross pattern. This is to avoid distortion of the part and/or causing gas or oil leakage. Conversely, bolts, nuts, or screws, should all be loosened (in sequence if specified) by about a quarter of a turn and then removed.

Where there is a tightening sequence specified in this Service Manual, the bolts, nuts, or screws must be tightened in the order and by the method indicated.

Torque wrench setting figures given in this Manual must be observed. The torque tools used must be of accurate calibration.

Locking devices, where specified, must be fitted. If the efficiency of a locking device is impaired during removal it must be renewed. This applies particularly to micro-encapsulated fixings which must always be replaced if disturbed. Where necessary, the text in this manual will indicate where such a fixing is used.

1 General Information

Table of Contents

Ignition System Safety Precautions 1.4
Dangerous Substances 1.4
Third Party Products 1.5
Fluoroelastomers 1.5
Oils 1.6
Health Protection Precautions 1.6
Environmental Protection Precautions 1.7
Brakes 1.7
Safety Instructions 1.8
- Jacking and Lifting 1.8
- Precautions against Damage 1.8
- Coolant 1.8
- Cleaning components 1.9
- Lubrication 1.9
- Joints and joint faces 1.9
- Gaskets, O-rings 1.9
- Liquid Gasket, Non-permanent Locking Agent 1.10
- Screw Threads 1.10
- Locking Devices 1.10
- Fitting a Split Pin 1.10
- Circlips, Retaining Rings 1.10
- Self Locking Nuts 1.10
- Encapsulated Bolts 1.10
- Oil and Grease Seals 1.11
- Press 1.11
- Ball Bearing 1.11
- Chassis Bearing Lubrication 1.11
- Metal bushes 1.12

Fuel Handling Precautions 1.13
- General 1.13
- Petrol - Gasoline 1.13
- Fuel Tank Removal 1.13
- Chassis Repairs 1.13

Electrical Precautions 1.14
Battery Disconnecting 1.14
Disciplines 1.14
Electrical Wires 1.14
Electrical Testing 1.15
Ohm's Law 1.15
Basic Electrical Circuits 1.15
Circuit Diagrams 1.16
Glossary of Circuit Diagram Symbols 1.16
Tracing Circuits 1.18
To Check Continuity: 1.18
To Measure Voltage: 1.19
CAN (Controller Area Networking) 1.20
Alternator/Charging System 1.21
Diagnosis - Charging Circuit 1.21
Starting Circuit 1.22
General Fault Finding - Starter Motor and Relay 1.22
Diagnosis - Starter Circuit 1.23
Specification 1.24
Replacement Parts 1.24
Service Data 1.24
Inspection 1.24
Service tools 1.24
Special service tools: 1.25
Torque Wrench Settings 1.41
Cylinder Head Area 1.41
Clutch 1.41
Crankshaft and Crankcases 1.41
Engine Covers 1.42
Transmission 1.42
Lubrication System 1.43
Cooling System 1.44
Fuel System, Exhaust System and Airbox 1.44
Rear Suspension 1.46
Front Suspension 1.46
Wheels 1.47
Front Brakes 1.47
Rear Brakes 1.48
ABS System 1.48
Footrests and Control Plates 1.49
Bodywork 1.50
Electrical 1.51
Routings 1.53
Clutch Cable Routing - Rocket III, Classic and Roadster 1.53
Clutch Cable Routing - Rocket III Touring 1.54
Handlebar Cable Routing - Rocket III, Classic and Roadster 1.55

Handlebar Cable Routing - Rocket III Touring 1.56
Main Wiring Harness Routing - Rocket III, Classic and Roadster 1.57
Main Wiring Harness Routing - Rocket III Touring 1.58
Rear Mudguard Harness Routing - Rocket III, Classic and Roadster 1.59
Rear Mudguard Harness Routing - Rocket III Touring 1.60
Front Brake Hose Routing - Rocket III and Classic 1.61
Front Brake Hose Routing - Rocket III Touring 1.62
Rear Brake Pipe and Hose Routing - Rocket III and Classic 1.63
Rear Brake Pipe and Hose Routing - Rocket III Touring 1.64
Brake Pipe and Hose Routing - Rocket III Roadster 1.65
Throttle Cable Routing - Rocket III, Classic and Roadster 1.66
Throttle Cable Routing - Rocket III Touring 1.67
Fuel Hose and Fuel Tank Breather Hose Routing (non-evaporative emission control versions) - Rocket III, Classic and Roadster 1.68
Fuel Hose and Fuel Tank Breather Hose Routing (non-evaporative emission control version) - Rocket III Touring 1.69
Fuel Hose and Evaporative/Fuel Tank Breather Hose Routing - Rocket III, Classic and Roadster 1.70
Fuel Hose and Evaporative/Fuel Tank Breather Hose Routing - Rocket III Touring 1.71

Ignition System Safety Precautions

Warning

The ignition system produces extremely high Voltages. Do not touch any part of the ignition system or any cables while the engine is running.

An electric shock caused by contact with the ignition system may lead to illness, injury or death.

Warning

Wearers of surgically implanted heart pacemaker devices should not be in close proximity to ignition circuits and or diagnostic equipment.

The ignition system and any diagnostic equipment may interrupt the normal operation of such devices causing illness or death.

Dangerous Substances

Warning

Many liquids and other substances used in motor vehicles are poisonous and should under no circumstances be consumed and should, as far as possible, be kept from contact with the skin. These substances among others include acid, anti-freeze, asbestos, brake fluid, fuel, lubricants, and various adhesives. Always pay close attention to the instructions printed on labels and obey the instructions contained within. These instructions are included for your safety and well-being.

NEVER DISREGARD THESE INSTRUCTIONS!

Third Party Products

Warning

Many proprietary products, such as chemicals, solvents and cleaning agents, will cause damage to components if used incorrectly or inappropriately. Always follow the manufacturer's instructions printed on the product container's labels and obey the instructions given. These instructions are included for your safety and well-being. Damage to the motorcycle components caused by the incorrect or inappropriate use of chemicals, solvents and cleaning agents may reduce the components efficiency, resulting in loss of motorcycle control and an accident.

Fluoroelastomers

Warning

Fluoroelastomer material is used in the manufacture of various seals in Triumph motorcycles.

In fire conditions involving temperatures greater than 315°C this material will decompose and can then be potentially hazardous. Highly toxic and corrosive decomposition products, including hydrogen fluoride, carbonyl fluoride, fluorinated olefins and carbon monoxide can be generated and will be present in fumes from fires.

In the presence of any water or humidity hydrogen fluoride may dissolve to form extremely corrosive liquid hydrofluoric acid.

If such conditions exist, do not touch the material and avoid all skin contact. Skin contact with liquid or decomposition residues can cause painful and penetrating burns leading to permanent, irreversible skin and tissue damage.

Oils

Warning

The engine and bevel box oils may be hot to the touch. Contact with hot oil may cause the skin to be scalded or burned.

Warning

Prolonged or repeated contact with engine oil can lead to skin dryness, irritation and dermatitis. In addition used engine oil contains potentially harmful contaminants which can cause cancer. Wear suitable clothing and avoid skin contact.

Health Protection Precautions

- Avoid prolonged and repeated contact with oils, particularly used engine oils.
- Wear protective clothing, including impervious gloves where practicable.
- Do not put oily rags in pockets.
- Overalls must be cleaned regularly. Discard heavily soiled clothing and oil impregnated footwear.
- First aid treatment should be obtained immediately for open cuts and wounds. Always be aware of who your nearest first-aider is and where the medical facilities are kept.
- Use barrier creams, applying before each work period to protect the skin from the effects of oil and grease and to aid removal of the same after completing work.
- Wash with soap and water to ensure all oil is removed (skin cleansers and nail brushes will help). Preparations containing lanolin replace the natural skin oils which have been removed.
- Do not use petrol, kerosene, diesel fuel, gas oil, thinners or solvents for cleaning skin.
- If skin disorders develop, obtain medical advice without delay.
- Where practicable, de-grease components prior to handling.

Warning

Any risk of eye injury must be avoided. Always wear eye protection when using a hammer, air line, cleaning agent or where there is ANY risk of flying debris or chemical splashing.

Environmental Protection Precautions

⚠ Caution

Do not pour oil on the ground, down sewers or drains, or into water courses. To prevent pollution of water-courses etc., dispose of used oil sensibly. If in doubt contact your local authority.

Burning of used engine oil in small space heaters or boilers can be recommended only for units of approved design. If in doubt, check with the appropriate local authority and/or manufacturer of the approved appliance.

Dispose of used oil and used filters through authorised waste disposal contractors, to licensed waste disposal sites, or to the waste oil reclamation trade. If in doubt, contact your local authority for advice on disposal facilities.

Brakes

⚠ Warning

Brake fluid is hygroscopic which means it will absorb moisture from the air. Any absorbed moisture will greatly reduce the boiling point of the brake fluid causing a reduction in braking efficiency.

Replace brake fluid in line with the routine maintenance schedule. A dangerous riding condition could result if this important maintenance item is neglected!

Do not spill brake fluid onto any area of the bodywork as this will damage any painted or plastic surface.

Always use new brake fluid from a sealed container and never use fluid from an unsealed container or from one that has been previously opened.

Do not mix different brands of fluid. Check for fluid leakage around brake fittings, seals and joints.

Check regularly for brake hose damage.

FAILURE TO OBSERVE ANY OF THE ABOVE WARNINGS MAY REDUCE BRAKING EFFICIENCY LEADING TO AN ACCIDENT.

⚠ Warning

If there has been an appreciable drop in the level of the fluid in either brake fluid reservoir, consult your authorised Triumph dealer for advice before riding.

If the brake lever or pedal feels soft when it is applied, or if the lever/pedal travel becomes excessive, there may be air in the brake lines or the brake may be defective.

It is dangerous to operate the motorcycle under such conditions and remedial action must be taken by your authorised Triumph dealer before riding the motorcycle.

Failure to take remedial action may reduce braking efficiency leading to an accident.

⚠ Warning

Use only DOT 4 specification brake fluid as listed in the General Information section of this manual. The use of brake fluids other than those DOT 4 fluids listed in the General Information section may reduce the efficiency of the braking system leading to an accident.

Failure to change the brake fluid at the interval specified in the routine maintenance schedule may reduce braking efficiency resulting in an accident.

Warning

Never use mineral based grease in any part of the braking system or in any area where contact with the braking system is possible. Mineral based grease will damage the hydraulic seals in the calipers and master cylinders.

Damage caused by contact with mineral based grease may reduce braking efficiency resulting in an accident.

Warning

Before installation, all internal brake components should be cleaned and lubricated with clean new DOT 4 brake fluid.

Never use solvents, petrol (gasoline), engine oil or any other petroleum distillate on internal brake components as this will cause deterioration of the hydraulic seals in the calipers and master cylinders.

A dangerous riding condition leading to loss of motorcycle control and an accident could result if this warning is ignored.

Safety Instructions

Jacking and Lifting

Warning

Always ensure that any lifting apparatus has adequate load and safety capacity for the weight to be lifted. Ensure the motorcycle is well supported to prevent any possibility of the machine falling prior to lifting or jacking or while repairs and servicing are carried out.

Never rely on a single means of support when working with the motorcycle. Use additional safety supports and straps to prevent toppling.

Do not leave tools, lifting equipment, spilt oil, etc. in a place where they could become a hazard to health. Always work in a clean, tidy area and put all tools away when the work is finished.

Precautions against Damage

Avoid spilling brake fluid or battery acid on any part of the bodywork. Wash spillages off with water immediately.

Disconnect the battery earth lead before starting work, see **ELECTRICAL PRECAUTIONS**.

Always use the recommended service tool where specified.

Protect exposed bearing and sealing surfaces, and screw threads from damage.

Coolant

Warning

Coolant mixture, which is blended with anti-freeze and corrosion inhibitors contains toxic chemicals which are harmful to the human body. Never swallow anti-freeze, corrosion inhibitors or any of the motorcycle coolant.

Warning

Do not remove the radiator cap when the engine is hot. When the engine is hot, the coolant inside the radiator is hot and also under pressure. Contact with the pressurised coolant will cause scalds and skin damage.

⚠ Caution

The coolant anti-freeze contains a corrosion inhibitor which helps prevent damage to the metal surfaces inside the cooling system. Without this inhibitor, the coolant would 'attack' the metals and the resulting corrosion would cause blockages in the cooling system leading to engine overheating and damage. Always use the correct anti-freeze as specified in the Owner's Handbook. Never use a methanol based anti-freeze as this does not contain the required corrosion inhibition properties.

⚠ Caution

Distilled water must be used with the anti-freeze (see specification for anti-freeze) in the cooling system.

If hard water is used in the system, it causes scale accumulation in the water passages, and considerably reduces the efficiency of the cooling system. Reduced cooling system efficiency may lead to the engine overheating and engine damage.

Cleaning components

A high flash-point solvent is recommended to reduce fire hazard.

Always follow container directions regarding the use of any solvent.

Always use the recommended cleaning agent or equivalent.

Do not use degreasing equipment for components containing items which could be damaged by the use of this process. Whenever possible, clean components and the area surrounding them before removal. Always observe scrupulous cleanliness when cleaning dismantled components.

Lubrication

The majority of engine wear occurs while the engine is warming up and before all the rubbing surfaces have an adequate lubrication film. During assembly, oil or grease (whichever is more suitable) should be applied to any rubbing surface, which has lost its lubrication film. Old grease and dirty oil should be cleaned off. This is because used lubricants will have lost some lubrication qualities and may contain abrasive foreign particles.

Use recommended lubricants. Some oils and greases in particular should be used only in certain applications and may be harmful if used in an application for which they are not intended. This manual makes reference to molybdenum disulphide grease in the assembly of certain engine and chassis parts. Always check manufacturer recommendations before using such special lubricants.

Joints and joint faces

Assemble joints dry unless otherwise specified in this Manual.

If gaskets and/or jointing compound is recommended for use; remove all traces of old jointing material prior to re-assembly. Do not use a tool which will damage the joint faces and smooth out any scratches or burrs on the joint faces using an oil stone. Do not allow dirt or jointing material to enter any tapped holes.

Gaskets, O-rings

Do not re-use a gasket or O-ring once it has been in service. The mating surfaces around the gasket should be free of foreign matter and perfectly smooth to avoid oil or compression leaks.

Liquid Gasket, Non-permanent Locking Agent

Follow manufacturer's directions for cleaning and preparing surfaces where these compounds will be used. Apply sparingly as excessive amounts of sealer may block engine oil passages and cause serious damage.

Prior to re-assembly, blow through any pipes, channels or crevices with compressed air.

Warning

To prevent injury, always use eye, face and ear protection when using compressed air. Always wear protective gloves if the compressed air is to be directed in proximity to the skin.

Screw Threads

Metric threads to ISO standard are used.

Damaged nuts, bolts and screws must always be discarded.

Castellated nuts must not be slackened back to accept a split-pin, except in those recommended cases when this forms part of an adjustment.

Do not allow oil or grease to enter blind threaded holes. The hydraulic action on screwing in the bolt or stud could split the housing.

Always tighten a nut or bolt to the recommended torque figure. Damaged or corroded threads can affect the torque reading.

Unless specified, threaded fixings must always be fitted dry (no lubrication).

Warning

Never lubricate a thread unless instructed to do so.

When a thread of a fixing is lubricated, the thread friction is reduced. When the fixing is tightened, reduced friction will cause overtightening and possible fixing failure.

A fixing which fails in service could cause component detachment leading to loss of control and an accident.

Locking Devices

Always release locking tabs and fit new locking washers, do not re-use locking tabs.

Fitting a Split Pin

Always fit new split-pins of the correct size for the hole in the bolt or stud. Do not slacken back castle nuts when fitting a split pin, except in those recommended cases when this forms part of an adjustment.

Always fit new roll pins of an interference fit in the hole.

Circlips, Retaining Rings

Replace any circlips and retaining rings that are removed. Removal weakens and deforms circlips causing looseness in the circlip groove. When installing circlips and retaining rings, take care to compress or expand them only enough to install them.

Always use the correct replacement circlip as recommended in the Triumph parts catalogue.

Self Locking Nuts

Self-locking nuts can be re-used, providing resistance can be felt when the locking portion passes over the thread of the bolt or stud.

DO NOT re-use self-locking nuts in critical locations, e.g. suspension components. Always use the correct replacement self-locking nut.

Encapsulated Bolts

An encapsulated bolt can be identified by a coloured section of thread which is treated with a locking agent.

Unless a specified repair procedure states otherwise, encapsulated bolts cannot be reused and MUST be replaced if disturbed or removed.

Warning

Failure to replace an encapsulated bolt could lead to a dangerous riding condition. Always replace encapsulated bolts.

Oil and Grease Seals

Replace any oil or grease seals that are removed. Removal will cause damage to an oil seal which, if re-used, would cause an oil leak.

Ensure the surface on which the new seal is to run is free of burrs or scratches. Renew the component if the original sealing surface cannot be completely restored.

Protect the seal from any surface which could cause damage over which it has to pass when being fitted. Use a protective sleeve or tape to cover the relevant surface and avoid touching the sealing lip.

Lubricate the sealing lips with a recommended lubricant. This will help to prevent damage in initial use. On dual lipped seals, smear the area between the lips with appropriate grease.

When pressing in a seal which has manufacturer's marks, press in with the marks facing out.

Seals must be pressed into place using a suitable driver. Use of improper tools will damage the seal.

Press

A part installed using a press or driver, such as a wheel bearing, should first be coated with oil or grease on its outer or inner circumference so that it will locate smoothly.

Ball Bearing

When installing a ball bearing, the bearing race which is an interference fit should be pushed by a suitable driver. This prevents severe stress or damage to the load carrying components. Press a ball bearing until it touches the shoulder in the bore or on the shaft.

With the sealing lip facing the lubricant, press or drift a seal to the depth of its housing, if the housing is shouldered, or flush with the face of the housing where no shoulder is provided.

Chassis Bearing Lubrication

Note:

- **This information relates only to bearing lubrication. For the procedures necessary to replace a bearing, always refer to the relevant section of this service manual.**
- **Bearings installed in engine and transmission applications are not covered by this information. Refer to the lubrication chapter or the relevant engine chapter for additional information.**

General

For a bearing to be serviceable for its anticipated life span it must be checked, adjusted and lubricated at regular intervals, as specified in the service schedules given in the owner's handbook and this service manual.

A correctly lubricated bearing will have a film of lubrication that separates the moving parts, disperses heat and protects the bearing surfaces from corrosion.

Note:

- **In all cases, use the lubricant recommended.**
- **Grease the bearing, not the cavity where it is located.**
- **A bearing that is not regularly checked and lubricated will have a reduced life span.**

New Bearings

New bearings are typically protected with an oil preservative to prevent corrosion etc. during storage. This is NOT the lubrication for the bearing but DOES NOT need to be washed off prior to assembly and in-service lubrication.

When lubricating a new bearing with grease the following steps should be taken:

1. Do not clean off the oil preservative.
2. Grease must be forced between the roller elements and the roller cage.
3. Rotate the bearing to ensure that the grease is distributed over the entire circumference of the internal parts.
4. Any excess grease should be smeared on the outside of the rollers.

Lubrication and Checks While Servicing a Bearing

1. Disassemble parts as necessary to access the bearing.
2. Inspect the old grease covering the bearing, looking for signs of bearing damage, i.e. flakes or specks of metal.
3. Remove the old grease.
4. Check the bearing for smooth operation and visually check for corrosion, dents and flaking in the bearing race, rollers or cage. Replace if necessary.

Below/overleaf several common bearing types and the lubrication procedures for each are identified:

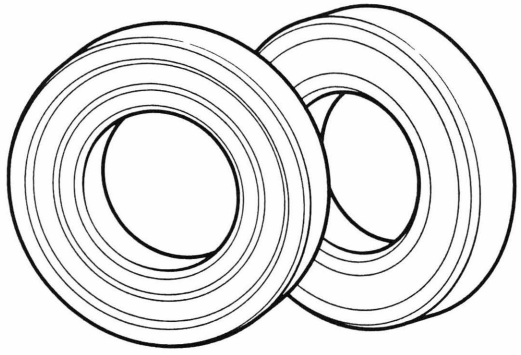

ceon

Sealed Bearings

Note:

- **Sealed bearings can be identified by their integrated seals.**
- **Sealed bearings are lubricated for life by the manufacturer.**
- **Any attempt to change the grease in a sealed bearing will damage the integrated seals. If the seals are damaged dirt and water will ingress and the life of the bearing will be greatly reduced.**

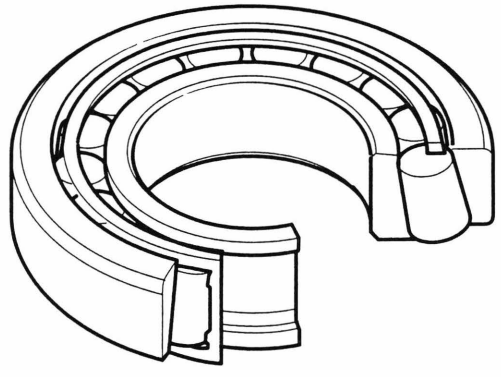

ceon

Taper Bearings

1. Grease must be forced between the inner race and the roller carrier.
2. Rotate the bearing to ensure that the grease is distributed over the entire circumference of the internal parts.
3. Any excess grease should be smeared on the outside of the rollers.

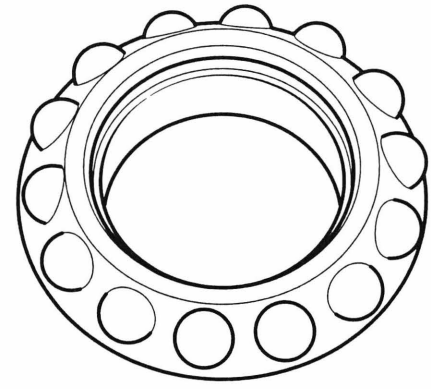

ceon

Angular Contact and Ball Bearing

1. Grease the bearing races and the ball bearing carrier.
2. Rotate the bearing to ensure that the grease is distributed over the entire circumference of the internal parts.

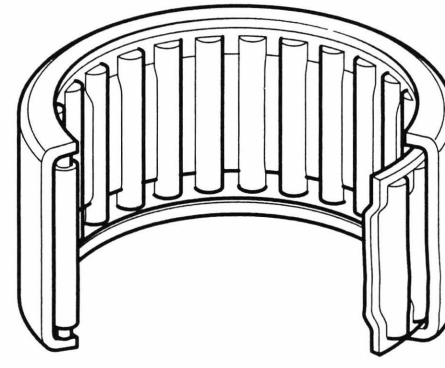

ceop

Needle Roller Bearings

1. Coat the needle rollers with grease.
2. Ensure the needle rollers turn so that the grease is distributed over the entire circumference of the internal parts.
3. Assemble the parts, adjust and check as necessary.

Metal bushes

1. Disassemble the parts as necessary to access the bush.
2. Remove the old grease.

Apply fresh grease to the metal bush.

Fuel Handling Precautions

General

The following information provides basic precautions which must be observed if petrol (gasoline) is to be handled safely. It also outlines other areas of risk which must not be ignored. This information is issued for basic guidance only and, if in doubt, appropriate enquiries should be made of your local Fire Officer.

Petrol - Gasoline

When petrol (gasoline) evaporates it produces 150 times its own volume in vapour which when diluted with air becomes a readily ignitable mixture. The vapour is heavier than air and will always fall to the lowest level. It can readily be distributed throughout any indoor environment by air currents, consequently, even a small spillage of petrol (gasoline) is potentially very dangerous.

⚠ Warning

Petrol (gasoline) is highly flammable and can be explosive under certain conditions. When opening the fuel tank cap always observe all the following items;

Turn the motorcycle ignition switch OFF.

Do not smoke.

Always have a fire extinguisher containing FOAM, CO_2, HALON or POWDER close at hand when handling or draining fuel or fuel systems. Fire extinguishers must also be present in areas where fuel is stored.

Always disconnect the vehicle battery, negative (black) lead first, before carrying out dismantling or draining work on a fuel system.

Whenever petrol (gasoline) is being handled, drained, stored or when fuel systems are being dismantled, make sure the area is well ventilated. All potential forms of ignition must be extinguished or removed (this includes any appliance with a pilot light). Any lead-lamps must be flame-proof and kept clear of any fuel spillage.

Warning notices must be posted at a safe distance from the site of the work to warn others that petrol is being openly handled. The notice must instruct the reader of the precautions which must be taken.

Failure to observe any of the above warnings may lead to a fire hazard which could result in personal injury.

⚠ Warning

No one should be permitted to repair components associated with petrol/gasoline without first having specialist training on the fire hazards which may be created by incorrect installation and repair of items associated with petrol/gasoline.

Repairs carried out by untrained personnel could bring about a safety hazard leading to a risk of personal injury.

⚠ Warning

Draining or extraction of petrol/gasoline from a vehicle fuel tank must be carried out in a well ventilated area.

The receptacle used to contain the petrol/gasoline must be more than adequate for the full amount of fuel to be extracted or drained. The receptacle should be clearly marked with its contents, and placed in a safe storage area which meets the requirements of local authority regulations.

When petrol/gasoline has been extracted or drained from a fuel tank, the precautions governing naked lights and ignition sources should be maintained.

Failure to observe any of the above warnings could bring about a safety hazard leading to a risk of personal injury.

Fuel Tank Removal

Fuel tanks should have a 'PETROL (GASOLINE) VAPOUR' warning label attached to them as soon as they are removed from the vehicle. In all cases, they must be stored in a secured, marked area.

Chassis Repairs

⚠ Warning

If the motorcycle is involved in an accident or collision it must be taken to an authorised Triumph dealer for repair or inspection. Any accident can cause damage to the motorcycle, which if not correctly repaired, may cause a second accident which may result in injury or death.

The frame must not be modified as any modification to the frame such as welding or drilling may weaken the frame resulting in an accident.

Electrical Precautions

The following guidelines are intended to ensure the safety of the operator whilst preventing damage to the electrical and electronic components fitted to the motorcycle. Where necessary, specific precautions are detailed in the relevant sections of this manual which should be referred to prior to commencing repair operations.

Equipment - Prior to commencing any test procedure on the motorcycle ensure that the relevant test equipment is working correctly and any harness or connectors are in good condition, in particular mains leads and plugs.

⚠ Warning

The ignition system produces extremely high voltages. Do not touch any part of the ignition system or any cables while the engine is running.

An electric shock caused by contact with the ignition system may lead to illness, injury or death.

⚠ Warning

Wearers of surgically implanted heart pacemaker devices should not be in close proximity to ignition circuits and/or diagnostic equipment.

The ignition system and any diagnostic equipment may interrupt the normal operation of such devices causing illness or death.

⚠ Warning

The battery contains harmful materials. Always keep children away from the battery whether or not it is fitted in the motorcycle.

Do not jump start the battery, touch the battery cables together or reverse the polarity of the cables as any of these actions may cause a spark which would ignite battery gasses causing a risk of personal injury.

High Voltage Circuits - Whenever disconnecting live H.T. circuits always use insulated pliers. Exercise caution when measuring the voltage on the coil terminals while the engine is running, high voltage spikes can occur on these terminals.

Connectors and Harness - The engine of a motorcycle is a particularly hostile environment for electrical components and connectors. Always ensure these items are dry and oil free before disconnecting and connecting test equipment. Never force connectors apart either by using tools or by pulling on the wiring itself. Always ensure locking mechanisms are disengaged before removal and note the orientation to enable correct reconnection. Ensure that any protective covers and substances are replaced if disturbed.

Having confirmed a component to be faulty, switch off the ignition and disconnect the battery negative (black) lead first. Remove the component and support the disconnected harness. When replacing the component keep oily hands away from electrical connection areas and push connectors home until any locking mechanism becomes fully engaged.

Battery Disconnecting

Before disconnecting the battery, switch off all electrical equipment.

⚠ Warning

To prevent the risk of a battery exploding and to prevent damage to electrical components ALWAYS disconnect the battery negative (black) lead first. When reconnecting the battery, always connect the positive (red) lead first, then the negative (black) lead. Always disconnect the battery when working on any part of the electrical system.

Failure to observe the above warnings may lead to electrical damage and a fire hazard which could cause personal injury.

Always ensure that battery leads are routed correctly and are not close to any potential chafing points.

Disciplines

Switch off the ignition prior to making any connection or disconnection in the system. An electrical surge can be caused by disconnecting 'live' connections which can damage electronic components.

Ensure hands and work surfaces are clean and free of grease, swarf, etc. as grease collects dirt which can cause tracking or high-resistance contacts.

Prior to commencing any test, and periodically during any test, touch a good earth to discharge body static. This is because some electronic components are vulnerable to static electricity.

Electrical Wires

All the electrical wires are either single-colour or two-colour and, with only a few exceptions, must be connected to wires of the same colour. On any of the two-colour wires there is a greater amount of one colour and a lesser amount of a second colour. A two-colour wire is identified by first the primary colour and then the secondary colour. For example, a yellow wire with thin red stripes is referred to as a 'yellow/red' wire; it would be a 'red/yellow' wire if the colours were reversed to make red the main colour.

Electrical Testing

For any electrical system to work, electricity must be able to flow in a complete circuit from the power source (the battery) via the components and back to the battery. No circuit means no electrical flow. Once the power has left the positive side of the battery and run through the component it must then return to the battery on its negative side (this is called earth or ground). To save on wiring, connections and space, the negative side of the battery is connected directly to the frame or engine. Around the frame and engine will be various other ground points to which the wiring coming from components will be connected. In the case of the starter motor it bolts directly to the engine, which is bolted to the frame. Therefore the frame and engine also form part of the earth return path.

Ohm's Law

The relationship between voltage, current and resistance is defined by Ohm's Law.

- The potential of a battery is measured in Volts (V).
- The flow of current in a circuit (I) is measured in Amperes.
- The power rating of a consumer is measured in Watts (W).
- The resistance (R) of a circuit is measured in Ohms (Ω).

Ohms law, for practical work can be described as -

$$\frac{\text{Voltage}}{\text{Current}} = \text{Resistance}$$

Power is calculated by multiplying Volts x Amps -

$$\text{Watts} = \text{Volts} \times \text{Amps}$$

By transposing either of these formulae, the value of any unit can be calculated if the other two values are known.

For example, if a battery of 12 V is connected to a bulb of 60 W:

- the current flowing in the circuit can be calculated by using -

$$\frac{W}{V} = I \qquad \frac{60}{12} = 5$$

- the bulb resistance can be calculated by using -

$$\frac{V}{I} = R \qquad \frac{12}{5} = 2.4$$

To use either of the following triangles, put your finger over the value you want to find. Multiply the remaining values if side-by-side, or divide if one is over the other.

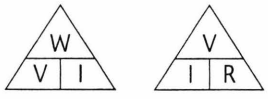

Basic Electrical Circuits

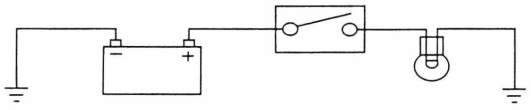

Basic Circuit Diagram

In the above circuit an electrical reservoir (the battery) is connected via a cable to a terminal on the controlling device (the switch) whose contacts are either open or closed. The other terminal on the switch is connected via a cable to the consumer (the bulb), and the other side of the bulb filament is connected to ground (earth) by another cable. The ground point is usually a part of the frame or engine, to which the battery negative terminal is also connected.

When the switch contacts are open (as shown in the diagram), the circuit is broken and no current flows. When the switch contacts are closed the circuit is made and current flows from the battery positive terminal through the switch contacts and bulb filament to ground. The frame completes the circuit to the battery negative terminal and the bulb illuminates.

Although some circuits on the circuit diagram may at first seem more complicated, it will generally be found that they can be broken down into sections which do not differ greatly from the basic circuit above.

Circuit Diagrams

Circuit diagrams are created to provide a 'picture' of the electrical system and to identify the route taken by each individual wire through the system, in order to identify which components it feeds and which connectors the wire runs through. Circuit diagrams are an essential tool for fault finding, as it is possible to locate start and finish points for a circuit without having to manually trace the wire through the motorcycle itself. Circuits diagrams may look confusing at first but when they are studied closely they soon become logical.

Due to the complex circuits and the number of individual wires, Triumph uses two types of circuit diagram in its service manuals.

- Within the manual conventional circuit diagrams are used to show the layout of the main circuits of the motorcycle. These are: Engine management/ignition, Lighting, Starting and Charging and Auxiliary and Accessory. In these diagrams no attempt is made to show the components of the system in any particular order or position in relation to the motorcycle.
- At the back of the service manual a full colour layout circuit diagram is used to show the main electrical components in a position similar to the actual position on the motorcycle.

Both of these circuit diagrams use similar symbols to illustrate the various system components and will be accompanied by a key to circuit diagram components and wiring colour codes.

Circuit diagrams also depict the inner workings of a switch cube (i.e. which wire connects to which when a switch is turned from one position to another) so that a test of that switch can be made using the wire terminals in the connector instead of disassembling the switch itself.

Glossary of Circuit Diagram Symbols

The following is a description of the symbols found in the circuit diagrams used in all Triumph Service Manuals.

Connector



This illustration is used to show all multi-plug type electrical connectors on Triumph circuit diagrams. The numbers in the box relate to the terminal numbers of the connector pins. On ECMs with two connectors, the number would be prefixed with the letters 'A' or 'B' to identify each connector. An additional number outside the box will identify the component.

Diode



An electrical one-way valve. Diodes allow current to flow in one direction but will not allow it to return. The arrow, which forms part of the diode symbol, indicates the direction of current flow.

Electromagnetic Winding (solenoid)

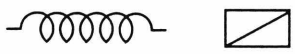

An electromagnetic winding (or solenoid) is used to convert an electrical current into a lateral movement. This can then be used to operate switches (as used in relays) or other components such as fuel injectors or secondary air injection solenoids.

Fuse

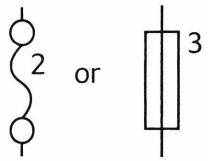

A fuse is a device which protects a circuit in the event of a fault. The fuse will 'blow' should a short circuit occur, protecting that circuit from further damage. The number next to the fuse on the circuit diagram indicates the position of the fuse in the fusebox.

Ground or Earth Point

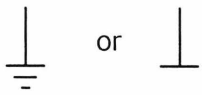

This symbol is used to show ground points. This is the negative connection to either the frame or engine, and is a common cause of intermittent faults due to loose or corroded connections.

Lamp or Bulb

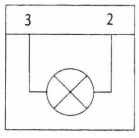

This symbol is used to show all types of light bulbs. The numbers in the box relate to the terminal numbers of the connector pins. An additional number outside the box will identify the component.

LED (Light Emitting Diode)



Triumph use LEDs for the alarm warning light, instrument illumination and warning lights, gear change lights and rear light/brake lights on various models.

Motor

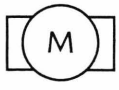

An electric motor. This could be the starter motor or a motor within an actuator, for example within the ABS modulator.

Relay

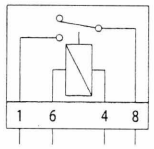

A relay is effectively an electromagnetic switch. To close the relay contacts and complete the circuit, an electromagnet in the relay is energised which causes the relay contacts to close, making the circuit complete.

Relays are used when the electrical current is too great for a mechanical switch, usually when the switching must be done quickly to prevent arcing across the switch contacts. If a mechanical switch were used, the mechanical switch contacts would quickly burn away.

Resistor



A device placed in a cable to reduce a voltage or restrict the maximum current a device can draw.

Splice



A hard cable joint where two or more cables are joined in the wiring harness. A potential source of both open and short circuits.

Switches

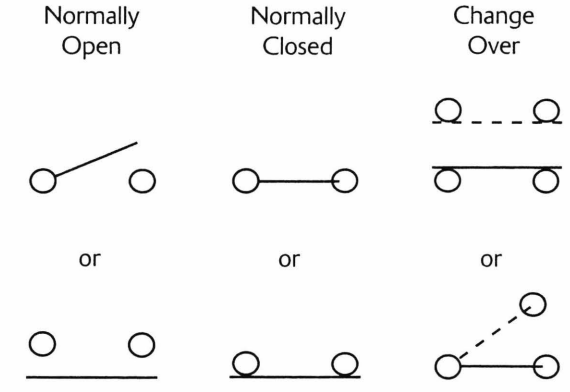

A mechanical device for completing or breaking a circuit. There are three common types of switch: normally open, normally closed and change-over.

Tracing Circuits

The following is a description of two types of common electrical failures, and some of the methods which may be used to find them.

Open circuit

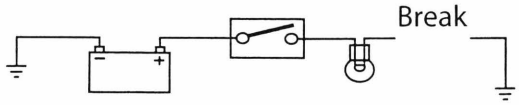

A break in an electrical circuit - current cannot flow. Usually caused by a break in a wire or cable or by a loose connection. Open circuits can often be intermittent, making diagnosis difficult.

Short circuit

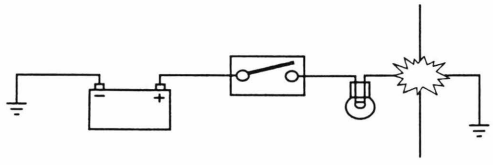

A 'short cut' in an electrical circuit - current by-passes the intended circuit, either to earth or to another, different circuit. Often caused by failure of the cable insulation due to chafing or trapping of the wire. There are two different types of short circuit - short to ground and short to Vbatt.

A short to ground means that the current is going to earth before it reaches the component it is supposed to feed. These are often caused by chafing of the harness to the frame or wires trapped between a bolted component, and will often blow the fuse on that circuit.

A short to Vbatt is a short to battery voltage (12 Volts) and is caused by a live power supply wire contacting an adjacent cable. Note that it is also possible for a 5 Volt sensor reference voltage to short to an adjacent circuit, which can also cause electrical failures and DTCs (Diagnostic Trouble Code) to be stored.

When tracing a wire that is suspect, carefully check the circuit diagram before starting. Remember

- a wire may diverge at a splice and go off to feed other circuits. If these circuits are working, check for wiring faults from the splice onwards.
- the circuit diagram is not an accurate guide to the actual location of the parts when fitted on the bike. It is a schematic diagram of the circuits.
- particularly where engine management items are concerned, the circuit is only completed by the ECM. If the ECM is not connected, the circuit may register as open.

To Check Continuity:

⚠ Caution

Ensure the circuit being tested is switched off before measuring continuity. Damage to the digital multi-meter (DMM) may result from testing a 'live' circuit with the meter set to resistance (Ω).

In the example below, the ground circuit continuity is being tested from the battery to the frame.

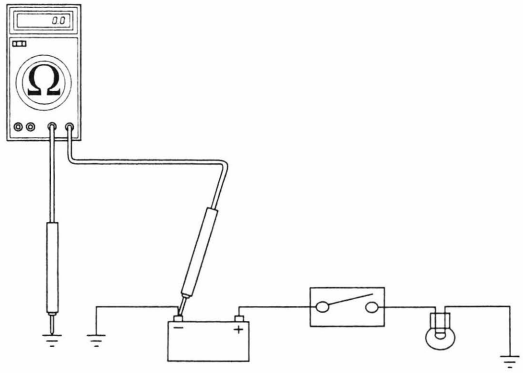

Continuity (Resistance) Check

- Locate each end of the wire.
- Set the Digital Multi Meter (DMM) to resistance check (Ω).
- Probe each end of the wire.
- If there is continuity, the meter will usually bleep or register the resistance of the cable.
- A high resistance figure could indicate a dirty or corroded connection.
- If there is a break in the wire, the meter will not bleep or register a resistance.
- By probing the wire in various places, the position of a high resistance or break in the wire (open circuit) can be narrowed down until it is found.

To Measure Voltage:

In the example below, the circuit voltage is being measured at the bulb positive (+) terminal.

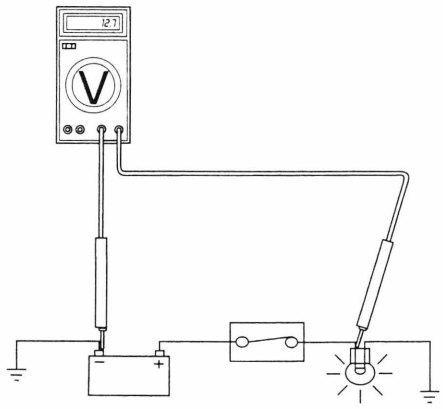

Voltage Check

- Turn the circuit to be tested 'ON'.
- Set the Digital Multi Meter (DMM) to Voltage check (V). Ensure the multi-meter is set to dc volts for direct current circuits (most circuits) or ac volts for alternating current circuits (typically alternator output voltage tests).
- Set the range of the DMM to the range best suited to the voltage of the circuit being tested (typically 20 volts for most DMMs). Refer to the DMM manufacturers instructions.
- Connect the black (ground) lead of the DMM to a reliable ground connection (usually the battery or frame ground).
- Locate the positive terminal of the wire or component to be tested.
- connect the red (positive) lead of the DMM to the positive terminal.
- Read the voltage from meter.

Splices

Splices are probably the most common cause of wiring faults after connectors. Splices are made where two or more wires come together and diverge in different directions, usually to feed a different circuit.

To locate a splice, it is necessary to peel back the insulation and examine the splice for its integrity. The most common fault is where one of the wires at the joint has come adrift usually causing the circuit it feeds or earths to become 'dead'.

Switches

To check a switch, set the multimeter to resistance/continuity and probe the two pins that form a closed circuit when the switch is pushed. If the switch is working correctly, the resistance should register or the meter will bleep.

Relays

All relay cases have a circuit path engraved on them showing the circuit path across the electromagnet and the switch. Before making any checks, first note the pin designations, current paths, and whether or not there is a diode in either circuit path.

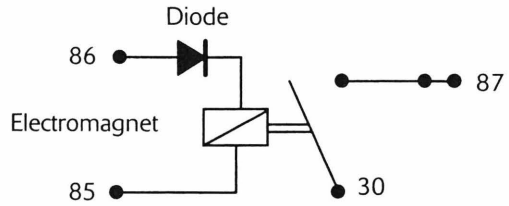

Make continuity checks across the electromagnet first, usually from pin 86 (positive) to pin 85 (negative). If a diode appears in the circuit use the diode check on the multimeter (volts scale) in the direction of current flow. If there is no diode, use the resistance check facility. An open circuit or unusually high resistance value indicates a faulty relay.

To check the switch side, apply a 12 volt supply between pins 86 and 85. With the supply connected the relay should be heard to click and there should be continuity between pins 30 and 87. An open circuit indicates a faulty relay.

CAN (Controller Area Networking)

CAN (sometimes called CANbus) is a protocol for data communication between Electronic Control Modules (ECMs). Each ECM on the network is connected by a single pair of twisted wires (or bus) which are used for the transmission of vehicle sensor data. By using CAN, the overall number of system sensors, and the amount of cabling required to allow ECMs to communicate with each other is greatly reduced.

This saves cost, weight and space, and makes the system more reliable, as the physical number of wires and connections is reduced.

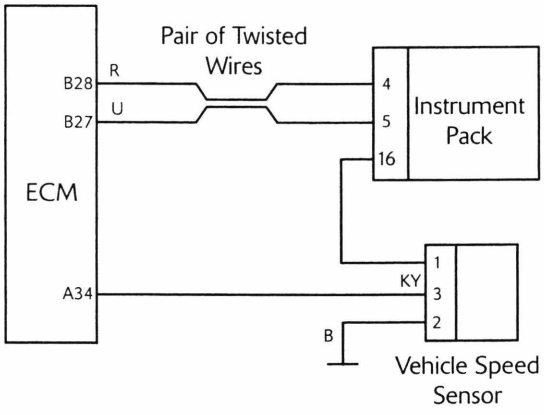

Extract from the Circuit Diagram Showing CAN Connection Between ECMs

CAN works by each ECM sending out 'packets' of information (such as engine speed or fuel consumption information) on to the network bus (note that the network must be free of data before any ECM is allowed to transmit). This data is given a priority according to its importance (for example 'engine speed' may have a higher priority than 'low fuel level'), so that even if two ECMs send data at the same time, high priority information is always sent first. Lower priority data is then resent after the high priority data has been received by all ECMs on the network.

The receiving ECM confirms the data has been received correctly and that the data is valid, and this information is then used by the ECM as necessary. Specific data not required by an ECM will still be received and acknowledged as correct but then disregarded (for example if an ECM does not require 'clutch switch position' information, this data packet would be ignored).

This allows for a very high speed system of communication, which is also very reliable. Should one ECM fail or transmit corrupted or otherwise incorrect messages, none of the other ECMs on the network will be affected, and after a certain time that ECM will be prevented from transmitting further messages until the fault is rectified. This stops the ECM from clogging the network with incorrect data and preventing other messages from getting through. The fault would then be reported by a DTC (Diagnostic Trouble Code).

Triumph currently use CAN for communication between the engine ECM and the instruments.

Alternator/Charging System

The charging system consists of an alternator, a rectifier/regulator assembly and the battery. The alternator is made up of two parts, the stator, which is mounted to the crankcase or the engine cover, and the rotor, mounted to the end of the crankshaft. The stator is an assembly of 18 coils, arranged into 3 phases. The rotor is a series of magnets mounted in the engine flywheel, which are arranged so as to be positioned around the outside of the stator coils. As the engine rotates the alternator produces an AC (alternating current) voltage in each of the three phases of the alternator, typically of around 35 to 40 volts AC at 4000 - 5000 rpm, although this figure varies between models. As the battery requires DC (direct current) voltage for correct charging, this AC voltage must be first rectified to DC current, and then regulated to the correct voltage for the battery of 14.5 ± 0.5 volts. This is done by the rectifier/regulator, which uses diodes to convert the alternator output to DC volts and limit the resulting output to the correct figure required for optimal battery charging.

If the charging circuit does not operate correctly, the following basic checks must be carried out before further diagnosis is performed:

- Check the battery terminals are clean and tight.
- Check the frame and engine earth connections are clean, tight and free from corrosion.
- Ensure the battery is fully charged and in good condition.
- Check that any fuse in the circuit is not blown and is of the correct rating (see page *18-22* for Rocket III and Classic, see page *18-25* for Rocket III Touring and Roadster).

Rectify any defects as necessary.

Diagnosis - Charging Circuit

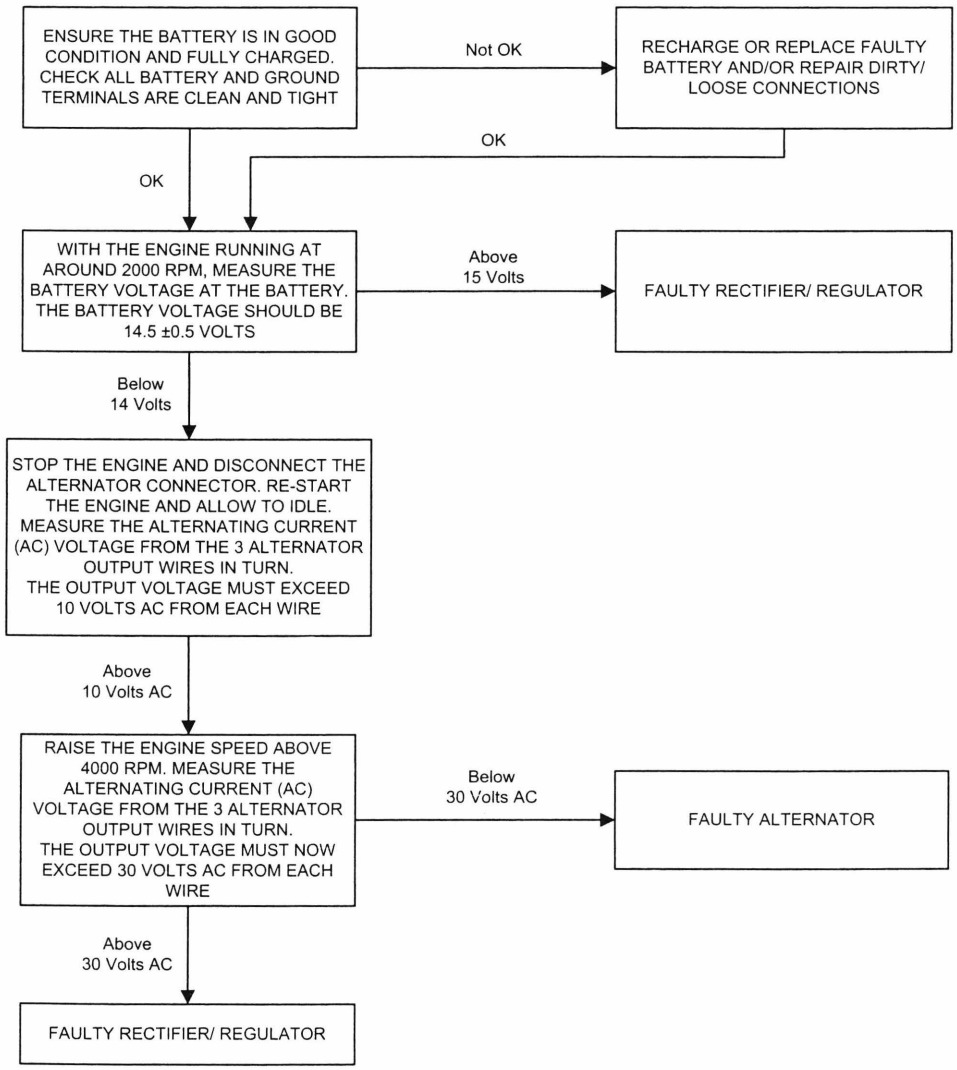

Starting Circuit

All Triumph models are equipped with an electric start system. This system consists of a starter relay, starter motor, starter switch, sidestand switch, engine stop switch, clutch switch and the sprag clutch. The starter motor is connected to the starter relay and the battery by heavy duty cables in order to supply the large currents required by the motor to start the engine. When the starter button is pressed the relay is energised, which then allows current to the starter motor. The starter motor will not operate unless the clutch lever is pulled in. Also, the starter will not operate if the sidestand is down, unless the transmission is in neutral. If the starter motor does not operate, the following basic checks must be carried out before further diagnosis is performed:

- Check the engine stop switch is in the 'RUN' position.
- Check the battery terminals are clean and tight.
- Check the frame and engine earth connections are clean, tight and free from corrosion.
- Ensure the battery is fully charged and in good condition.
- Check that any fuse in the circuit is not blown and is of the correct rating.
- Using the Triumph diagnostic tool, check the operation of the neutral switch or gear position sensor (if fitted), sidestand and clutch switches.

Note:

- **On all new models from Daytona 675 onwards, which use a CAN connection between the instruments and the ECM, the engine will not crank if the instruments are disconnected.**

Rectify any defects as necessary.

General Fault Finding - Starter Motor and Relay

Symptom	Possible cause(s)
Starter relay does not click, starter motor does not turn	Battery discharged or defective
	Blown main or starter relay fuse
	Defective starter relay wiring or starter switch
	Check that the sidestand, transmission and clutch lever are positioned for engine starting i.e. transmission in neutral, clutch lever pulled in and the sidestand down
	Defective alarm system - ensure any alarm fitted is working correctly
Starter motor turns slowly	Battery discharged or defective
	Loose, corroded or dirty battery connections
	Loose, corroded or dirty starter motor or starter relay connections
	Defective starter motor
	Loose, corroded or dirty battery ground connections
Starter relay clicks but engine does turn over	Battery discharged or defective
	Crankshaft does not turn due to engine defect
	Defective starter motor
	Starter cable open circuit
	Defective starter relay
Starter motor turns but engine does not turn over	Starter motor or starter ring gear

Diagnosis - Starter Circuit

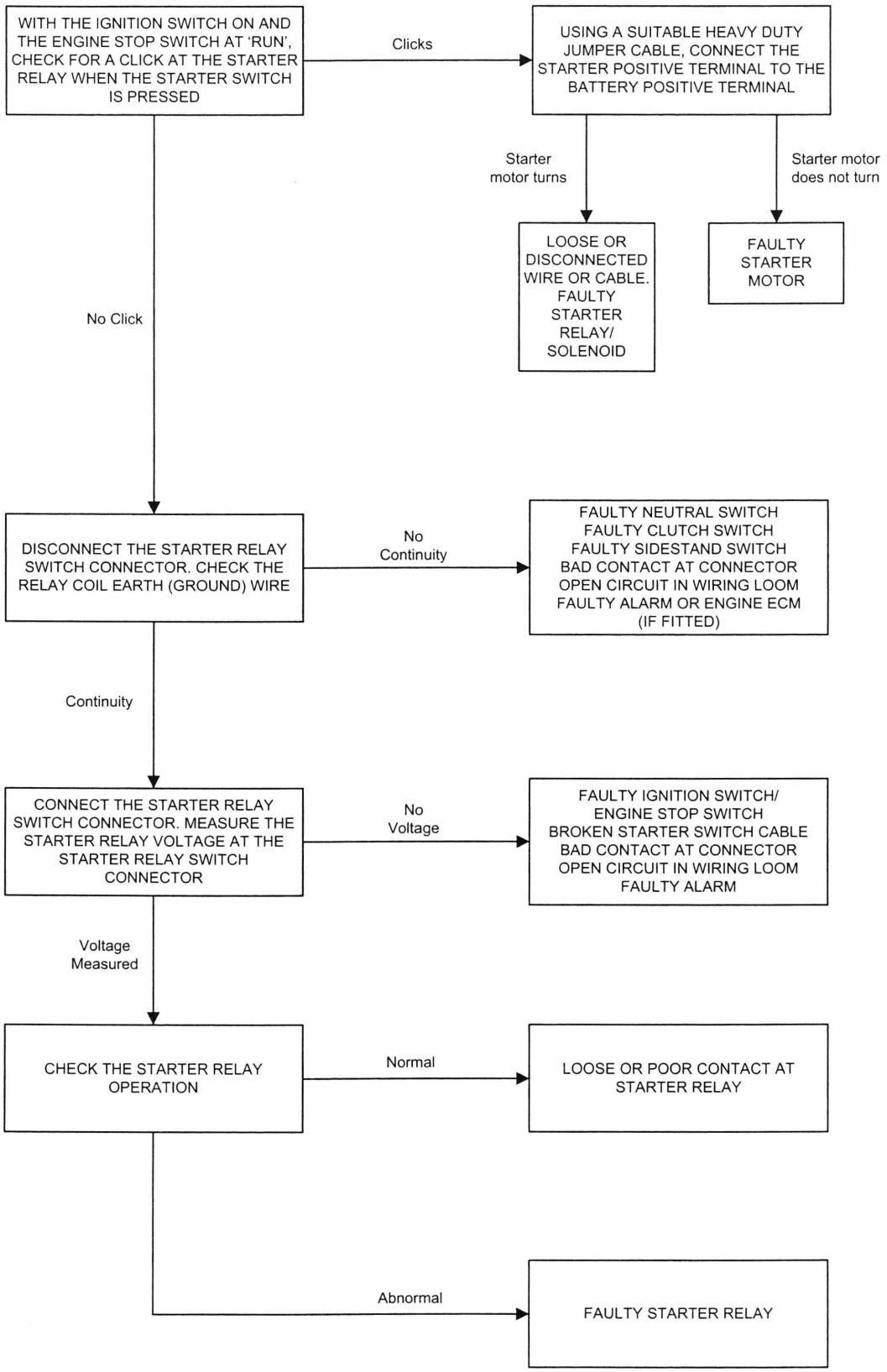

Specification

Triumph are constantly seeking to improve the specification, design and production of their motorcycles and alterations take place accordingly.

While every effort has been made to ensure the accuracy of this Manual, it should not be regarded as an infallible guide to current specifications of any particular motorcycle.

Authorised Triumph dealers are not agents of Triumph and have no authority to bind the manufacturer by any expressed or implied undertaking or representation.

Replacement Parts

⚠ Warning

Only Triumph genuine parts should be used to service, repair or convert Triumph motorcycles. To ensure that Triumph genuine parts are used, always order parts, accessories and conversions from an authorised Triumph dealer. The fitting of non-approved parts, accessories or conversions may adversely affect the handling, stability or other aspects of the motorcycle operation which may result in an accident causing serious injury or death.

⚠ Warning

Always have Triumph genuine parts, accessories and conversions fitted by an authorised Triumph dealer. The fitment of parts, accessories and conversions by a dealer who is not an authorised Triumph dealer may affect the handling, stability or other aspects of the motorcycle operation which may result in an accident causing serious injury or death.

⚠ Warning

Always have Triumph approved parts, accessories and conversions fitted by a trained technician. To ensure that a trained technician is used, have an authorised Triumph dealer fit the parts. The fitment of parts, accessories and conversions by personnel other than a trained technician at an authorised Triumph dealer may affect the handling, stability or other aspects of the motorcycle operation which may result in an accident causing serious injury or death.

Service Data

The service data listed in this manual gives dimensions and specifications for brand new, original parts. Where it is permissible to allow a part to exceed these figures, then the service limit is given.

The terms of the motorcycle warranty will be invalidated by the fitting of other than genuine Triumph parts.

All genuine Triumph parts have the full backing of the motorcycle warranty. Triumph dealers are obliged to supply only genuine Triumph recommended parts.

Inspection

Disassembled parts should be visually inspected and replaced with new ones if there are any signs of the following:

Abrasions, cracks, hardening, warping, bending, dents, scratches, colour changes, deterioration, seizure or damage of any nature.

Service tools

Special service tools have been developed to facilitate removal, dismantling and assembly of certain mechanical components in a practical manner without causing damage. Some operations in this service manual cannot be carried out without the aid of the relevant service tools. Where this is the case, the tools required will be described during the procedure.

Special service tools:

3880105-T0301 - Angular torque gauge

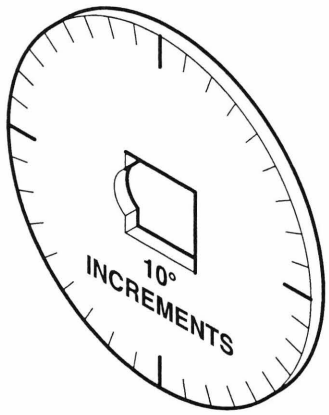

cbxt

T3880047 - Kit - Fuel pressure gauge

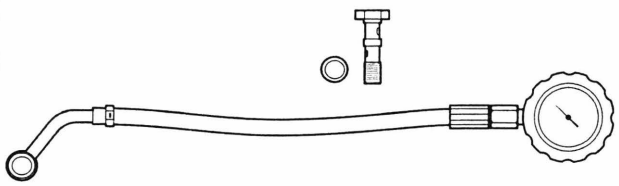

3880080-T0301 - Fork seal / bearing drift

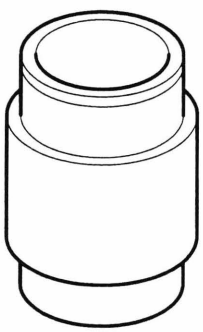

ccgv

3880160-T0301 - Fork filler evacuator

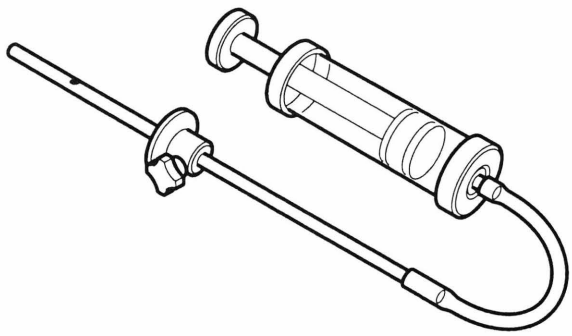

ccha

T3880313 - Oil filter wrench

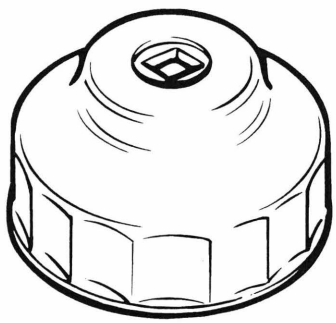

3880140-T0301 Head race adjusters

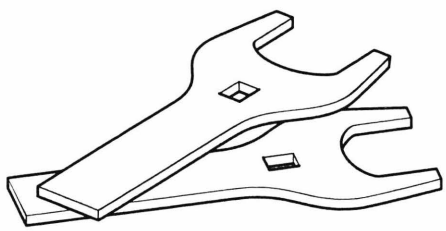

kagf1

3880070-T0301 – Bearing Installer

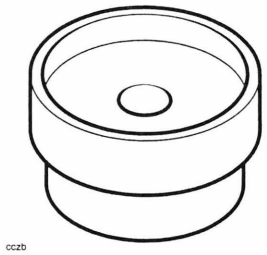

cczb

3880075-T0301 – Bearing Installer

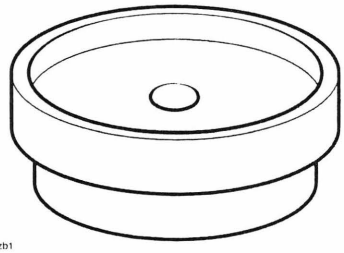

cczb1

T3880057 - Diagnostic tool

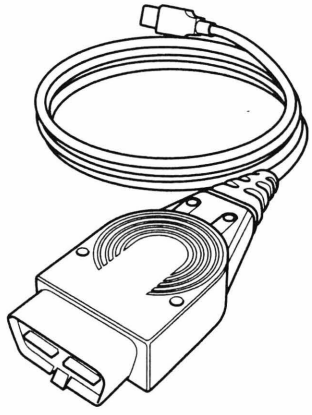

T3880200 - Puller - alternator

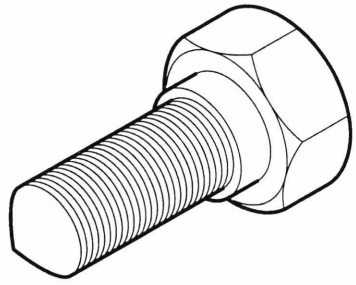

cche

T3880201 - Anti-rotation jig - alternator

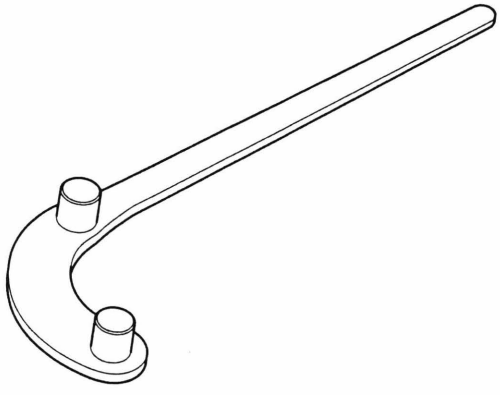

ccgy

T3880061 - Extractor, liners

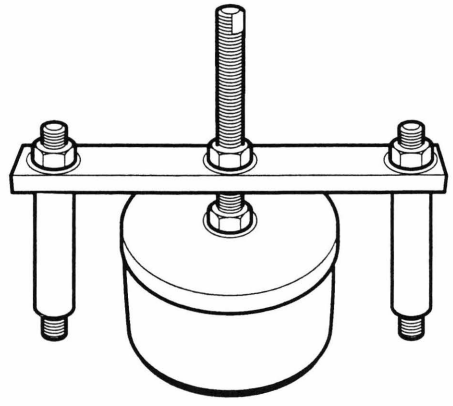

cchb

3880025-T0301 - Clutch anti-rotation jig

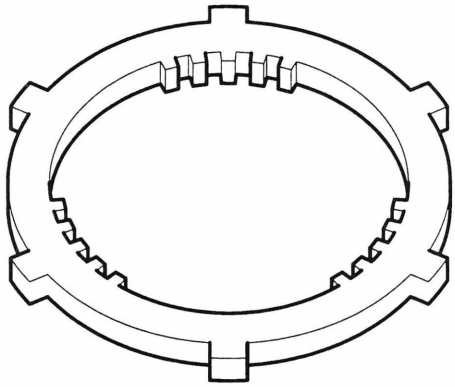

cchd

T3880062 - Castle wrench – 38 mm

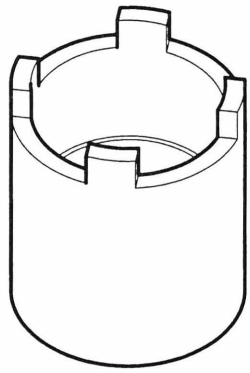

ccgu

T3880063 - Castle wrench – 31 mm

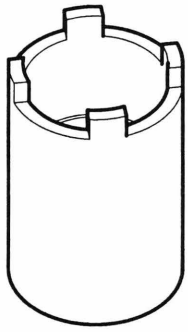

ccgt

T3880064 - Drift, swinging arm bearings

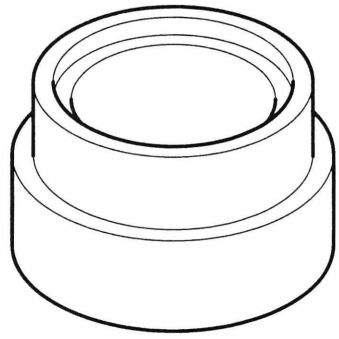

cchc

3880085-T0301 - Fork assembly rod

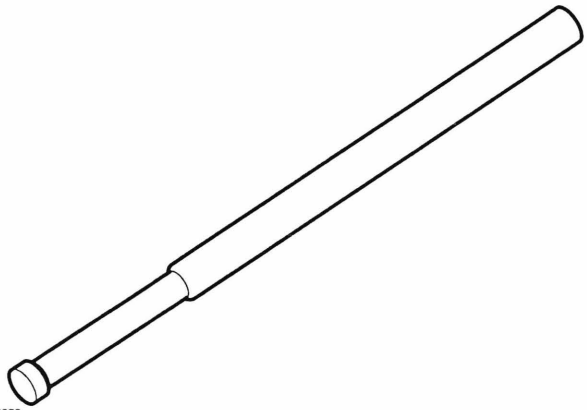

ccgs

3880090-T0301 - Fork piston holder

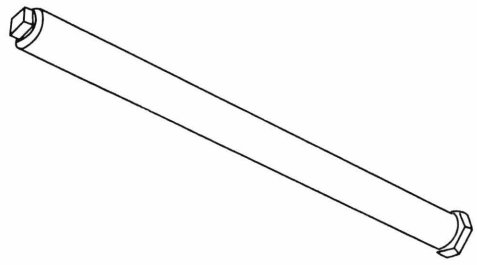

3880090

T3880067 - Fork spring compressor

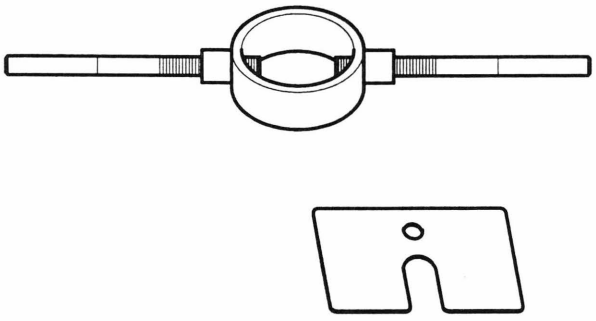

ccgw

T3880202 - Camshaft timing jig

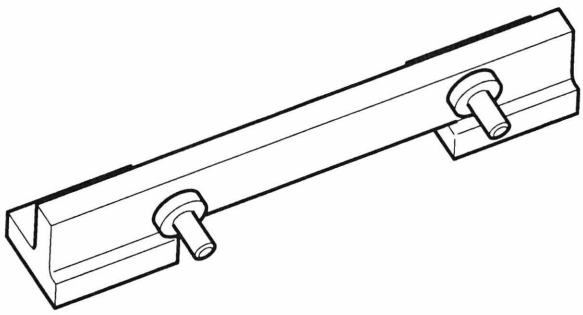

ccgx

T3880007 - Mirror location fixture

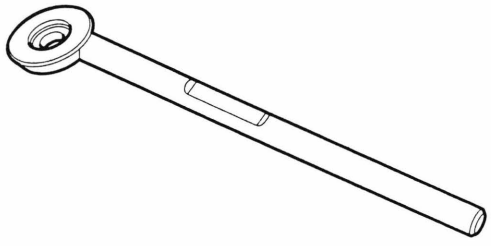

T3880208 - Slide hammer

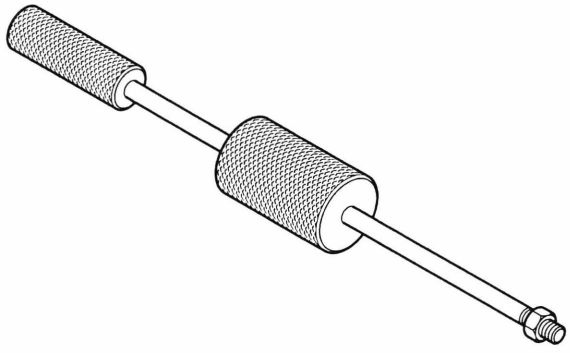

cemy12

T3880210 - Adapter tool, input shaft assembly

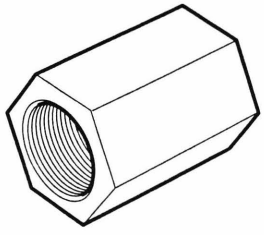

cetu

T3880068 - Gauge, camshaft drive chain tensioner

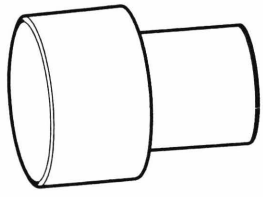

3880068

Full Specification **Rocket III, Classic and Roadster**

Engine	3 Cylinder 12 Valve DOHC
Arrangement	In line, longitudinal
Displacement	2294 cc
Bore x Stroke	101.6 x 94.3 mm
Compression Ratio	8.7:1
Cylinder Numbering	Number 1 at front
Firing order	1-2-3
Max. Power (DIN 70020)	148 PS at 5,750 rpm
Max. Torque	221 Nm at 2,750 rpm

Cylinder Head

Valve Head Dia.	In	37.90 mm
	Ex.	32.30 mm
Valve Lift	In	8.30 mm
	Ex.	8.30 mm
Valve Stem Dia.	In	5.475 – 5.490 mm (std)
	Ex.	5.475 – 5.490 mm (std)
Valve Guide Bore Dia.		5.500 – 5.515 mm (std)
Valve Seat Width (in head)		1.000 – 1.100 mm (std)
		1.500 mm (service limit)
Valve Seat Width (valve)		1.98 – 2.26 mm (std)
Valve Seat Angle		90° inclusive
Valve Spring Length		43.2 mm (std)
Valve Spring 'Load at Length'	In	180 N +/- 10 N at 36.2 mm
	Ex.	180 N +/- 10 N at 36.2 mm
Valve Clearance	In	0.10 – 0.15 mm
	Ex.	0.15 – 0.20 mm
Valve Bucket Bore Dia.	In	28.015 – 28.035 mm
	Ex.	28.015 – 28.035 mm
Valve Bucket Dia.	In	27.978 – 27.993 mm
	Ex.	27.978 – 27.993 mm
Valve Timing (at 1 mm lift)		
Inlet	open	12° BTDC
	close	28° ABDC
	duration	220°
Exhaust	open	41° BBDC
	close	11° ATDC
	duration	232°
Camshaft Journal Dia.		22.93 – 22.96 mm (std)

Full Specification	Rocket III, Classic and Roadster
Camshaft Journal Clearance	0.040 – 0.091 mm (std)
	0.13 mm (service limit)
Camshaft Journal Bore Dia.	23.000 – 23.021 mm (std)
Camshaft End Float	0.10 – 0.13 mm (std)
Camshaft Run-out	0.015 mm (std)
Camshaft Tensioner Spring Free Length	73.7 mm

Clutch/Primary Drive

Primary Drive	Type	Gear, with backlash eliminator
	Reduction Ratio	1.034:1
Clutch	Type	Wet, multi-plate
No. of Friction Plates		10
Plate Flatness Limit		0.30 mm
Friction Plate Thickness (new)		3.72 – 3.88 mm
Friction Plate Thickness (service limit)		3.5 mm
Clutch Actuation Method		Cable
Cable Free Play (at lever)		2 – 3 mm

Piston/Crankshaft

Cylinder Liner Dia.		101.591 – 101.609 mm (std)
		101.659 mm (service limit)
Piston Diameter		101.561 – 101.577 mm (std)
		101.511 mm (service limit)
Piston Ring to Groove Clearance	Top	0.02 – 0.06 mm (std)
		0.16 mm (service limit)
	Second	0.02 – 0.06 mm (std)
		0.16 mm (service limit)
Piston Ring Groove Width	Top	1.01 – 1.03 mm (std)
		1.11 mm (service limit)
	Second	1.01 – 1.03 mm (std)
		1.11 mm (service limit)
	Oil	2.51 – 2.53 mm (std & service limit)
Piston Ring End Gap	Top	0.20 – 0.35 mm (std)
		0.55 mm (service limit)
	Second	0.30 – 0.50 mm (std)
		0.675 mm (service limit)
	Oil	0.20 – 0.70 mm (std)
		0.875 mm (service limit)
Gudgeon Pin Bore Dia. In Piston		21.994 – 22.001 mm (std)
		22.011 mm (service limit)
Gudgeon Pin Dia.		21.982 – 21.987 mm (std)
		21.972 mm (service limit)

Full Specification	Rocket III, Classic and Roadster
Connecting Rod Small End Dia.	22.005 – 22.018 mm (std)
	22.028 mm (service limit)
Connecting Rod Big End Dia.	44.000 – 44.009 mm (std)
Connecting Rod Big End Side Clearance	0.15 – 0.30 mm (std)
	0.50 mm (service limit)
Crankshaft Big End Journal Dia.	40.946 – 40.960 mm (std)
	40.922 mm (service limit)
Crankshaft Big End Bearing Clearance	0.035 – 0.065 mm (std)
	0.100 mm (service limit)
Crankshaft Main Journal Dia.	43.092 – 43.108 mm (std)
	43.068 mm (service limit)
Crankshaft Main Bearing Clearance	0.018 – 0.041 mm (std)
	0.10 mm (service limit)
Crankshaft End Float	0.05 – 0.20 mm (std)
	0.40 mm (service limit)
Crankshaft Run-out	0.04 mm (std)
	0.07 mm (service limit)

Transmission

Type		5 Speed Constant Mesh
Gear Ratios	Primary	1.034:1
	1st	2.929:1
	2nd	1.947:1
	3rd	1.435:1
	4th	1.160:1
	5th	0.964:1
	Secondary	1.043:1
Gear Selector Fork Thickness		5.90 – 6.00 mm (std)
		5.80 mm (service limit)
Gear Selector Groove Width		6.05 – 6.15 mm (std)
		6.30 (service limit)
Gear Selector Fork to Groove Clearance		0.05 – 0.25 mm (std)
		0.50 (service limit)

Final Drive

Final Drive Type	Bevel geared crown wheel and pinion
Drive System	Universal-jointed shaft with torsional damper
Final Drive Ratio	2.846:1
Final Drive Oil	Castrol SAF-XO (fully synthetic hypoid oil) or equivalent
Final Drive Oil Capacity	0.17 litres

Full Specification	Rocket III, Classic and Roadster

Lubrication

Oil Capacity (including filter, dry fill)	5.9 litres
Oil and Filter Change	5.4 litres
Oil change only	5.1 litres
Recommended Oil Approval Rating	API SH (or higher) and JASO MA
Viscosity	10W/40 or 15W/50
Type	Semi or fully synthetic
Oil Pressure (in main gallery)	3.00 – 3.60 Bar at 3,500 rpm
Oil Pump Rotor Tip Clearance	0.15 mm (std – both pumps)
	0.20 mm (service limit – both pumps)
Oil Pump Body Clearance	0.15 – 0.22 mm (std – both pumps)
	0.35 mm (service limit – both pumps)
Oil Pump Rotor End Float	0.02 – 0.07 mm (std – both pumps)
	0.10 mm (service limit – both pumps)

Ignition System

Type	Digital, inductive
Electronic Rev-Limiter	6,500 rpm
Pick up Coil Air Gap	Fixed, not adjustable
Pick up Coil Resistance	0.56 KΩ
Ignition Coil Type	Inductive, twin output
Spark Plug Type	NGK DPR7EA9, 2 per cylinder
Spark Plug Gap	0.9 mm

Fuel System

Fuel Type	Unleaded, 91 RON (US - 87 RON/MON)
Fuel Tank Capacity	24 litres
Low Level Warning Lamp	5.5 litres remaining
Fuel Pump Type	Submerged, electric
Fuel Pressure (nominal)	3.0 Bar
Purge Control System	Modulated, vacuum

Fuel Injection System

Type	Multi point sequential
Idle Speed	850 rpm
Injector Type	Single nozzle
Throttle	Twin butterfly
Idle Speed Control	Stepper motor

Full Specification	Rocket III, Classic and Roadster
Control Sensors	Coolant temperature, manifold absolute pressure (all cylinders), intake air temperature, barometric pressure, gear position, road speed, primary and secondary throttle position.

Cooling System

Coolant Mixture	50/50 (pre mixed as supplied by Triumph)
Anti-Freeze Type	Triumph HD4X Hybrid OAT coolant
Cooling System Capacity	3.2 litres
Radiator Cap Opening Pressure	1.2 Bar
Thermostat Opening Temperature	88°C
Cooling Fan Switch On Temperature	103°C
Temperature Gauge Sensor Resistance	187Ω at 100°C

Suspension

Front Fork Travel	120 mm
Recommended Fork Oil Grade	KHL 15-10
Oil Level (fork fully compressed and spring removed)	89 mm
Oil Volume (dry fill)	667 cm^3 +/- 4.0 cm^3
Front Fork Pull Through	0 mm (top of the outer tube flush with top yoke)
Fork Spring Rate	K = 16 N/mm
Rear Wheel Travel	105 mm

Brakes

Front type	Two four piston calipers acting on twin discs
Front Caliper Piston Diameter	33.96 mm/30.23 mm
Front Disc Dia.	320 mm
Front Disc Thickness	5.0 mm standard (4.5 mm service limit)
Front Disc Run-out Max.	0.3 mm
Front Master Cylinder Dia.	14 mm
Recommended Fluid	DOT 4
Rear Type	Twin piston sliding caliper acting on single disc
Rear Caliper Piston Dia.	32 mm
Rear Disc Dia.	316 mm
Rear Disc Thickness	7.5 mm standard (6.5 mm service limit)
Rear Disc Run-out Max.	0.15 mm
Rear Master Cylinder Dia.	12.7 mm
Recommended Fluid	DOT 4

Full Specification — Rocket III, Classic and Roadster

Wheels and Tyres

Front Wheel Size	MT 3.5 x 17
Front Wheel Rim Axial Run-out	0.5 mm
Front Wheel Rim Radial Run-out	0.5 mm
Front Tyre Size	150/80 R17
Front Tyre Pressure (cold)	2.3 Bar
Front Tyre Tread Depth min.	Over 130 km/h – 2 mm (or minimum legal limit, whichever is greater)
	Under 130 km/h – 2 mm (or minimum legal limit, whichever is greater)
Rear Wheel Size	MT 7.5 x 16
Rear Wheel Rim Axial Run-out	0.5 mm
Rear Wheel Rim Radial Run-out	0.5 mm
Rear Tyre Size	240/50 R16
Rear Tyre Pressure (cold)	2.9 Bar
Rear Tyre Tread Depth min	Over 130 km/h – 3 mm (or minimum legal limit, whichever is greater)
	Under 130 km/h – 2 mm (or minimum legal limit, whichever is greater)

Frame

Frame Type	Tubular steel
Overall Length	2500 mm
Overall Width	970 mm (Rocket III) 1054 mm (Rocket III Classic)
Wheelbase	1695 mm
Seat Height	750 mm
Castor	32°
Trail	148 mm
Dry Weight	320 kg
Max. Payload (rider, passenger, luggage & accessories)	220 kg

Electrical Equipment

Battery Rating	12 volt, 18 amp hour
Alternator Rating	37 amps/min at 2,000 rpm
	41 amps/min at 6,000 rpm

Full Specification	Rocket III Touring
Engine	3 Cylinder 12 Valve DOHC
Arrangement	In line, longitudinal,
Displacement	2294 cc
Bore x Stroke	101.6 x 94.3 mm
Compression Ratio	8.7:1
Cylinder Numbering	Number 1 at front
Firing order	1-2-3
Max. Power (95/1/EC)	106 PS at 5,400 rpm
Max. Torque	203 Nm at 2,500 rpm

Cylinder Head

Valve Head Dia.	In	37.90 mm
	Ex.	32.30 mm
Valve Lift	In	8.30 mm
	Ex.	8.30 mm
Valve Stem Dia.	In	5.475 – 5.490 mm (std)
	Ex.	5.475 – 5.490 mm (std)
Valve Guide Bore Dia.		5.500 – 5.515 mm (std)
Valve Seat Width (in head)		1.000 – 1.100 mm (std)
		1.500 mm (service limit)
Valve Seat Width (valve)		1.98 – 2.26 mm (std)
Valve Seat Angle		90° inclusive
Valve Spring Length		43.2 mm (std)
Valve Spring 'Load at Length'	In	180 N +/- 10 N at 36.2 mm
	Ex.	180 N +/- 10 N at 36.2 mm
Valve Clearance	In	0.10 – 0.15 mm
	Ex.	0.15 – 0.20 mm
Valve Bucket Bore Dia.	In	28.015 – 28.035 mm
	Ex.	28.015 – 28.035 mm
Valve Bucket Dia.	In	27.978 – 27.993 mm
	Ex.	27.978 – 27.993 mm
Valve Timing (at 1 mm lift)		
Inlet	open	12° BTDC
	close	28° ABDC
	duration	220°
Exhaust	open	41° BBDC
	close	11° ATDC
	duration	232°
Camshaft Journal Dia.		22.93 – 22.96 mm (standard)

Full Specification		Rocket III Touring
Camshaft Journal Clearance		0.040 – 0.091 mm (std)
		0.13 mm (service limit)
Camshaft Journal Bore Dia.		23.000 – 23.021 mm (std)
Camshaft End Float		0.10 – 0.13 mm (std)
Camshaft Run-out		0.015 mm (std)
Camchain Tensioner Spring Free Length		73.7 mm

Clutch/Primary Drive

Primary Drive	Type	Gear, with backlash eliminator
	Reduction Ratio	1.034:1
Clutch	Type	Wet, multi-plate
No. of Friction Plates		10
Plate Flatness Limit		0.30 mm
Friction Plate Thickness (new)		3.72 – 3.88 mm
Friction Plate Thickness (service limit)		3.5 mm
Clutch Actuation Method		Cable
Cable Free Play (at lever)		2 – 3 mm

Piston/Crankshaft

Cylinder Liner Dia.		101.591 – 101.609 mm (std)
		101.659 mm (service limit)
Piston Diameter		101.561 – 101.577 mm (std)
		101.511 mm (service limit)
Piston Ring to Groove Clearance	Top	0.02 – 0.06 mm (std)
		0.16 mm (service limit)
	Second	0.02 – 0.06 mm (std)
		0.16 mm (service limit)
Piston Ring Groove Width	Top	1.01 – 1.03 mm (std)
		1.11 mm (service limit)
	Second	1.01 – 1.03 mm (std)
		1.11 mm (service limit)
	Oil	2.51 – 2.53 mm (std & service limit)
Piston Ring End Gap	Top	0.20 – 0.35 mm (std)
		0.55 mm (service limit)
	Second	0.30 – 0.50 mm (std)
		0.675 mm (service limit)
	Oil	0.20 – 0.70 mm (std)
		0.875 mm (service limit)
Gudgeon Pin Bore Dia. In Piston		21.994 – 22.001 mm (std)
		22.011 mm (service limit)
Gudgeon Pin Dia.		21.982 – 21.987 mm (std)
		21.972 mm (service limit)

Full Specification	Rocket III Touring
Connecting Rod Small End Dia.	22.005 – 22.018 mm (std)
	22.028 mm (service limit)
Connecting Rod Big End Dia.	44.000 – 44.009 mm (std)
Connecting Rod Big End Side Clearance	0.15 – 0.30 mm (std)
	0.50 mm (service limit)
Crankshaft Big End Journal Diameter	40.946 – 40.960 mm (std)
	40.922 mm (service limit)
Crankshaft Big End Bearing Clearance	0.035 – 0.065 mm (std)
	0.100 mm (service limit)
Crankshaft Main Journal Dia.	43.092 – 43.108 mm (std)
	43.068 mm (service limit)
Crankshaft Main Bearing Clearance	0.018 – 0.041 mm (std)
	0.10 mm (service limit)
Crankshaft End Float	0.05 – 0.20 mm (std)
	0.40 mm (service limit)
Crankshaft Run-out	0.04 mm (std)
	0.07 mm (service limit)

Transmission

Type		5 Speed Constant Mesh
Gear Ratios	Primary	1.034:1
	1st	2.929:1
	2nd	1.947:1
	3rd	1.435:1
	4th	1.160:1
	5th	0.964:1
	Secondary	1.043:1
Gear Selector Fork Thickness		5.90 – 6.00 mm (std)
		5.80 mm (service limit)
Gear Selector Groove Width		6.05 – 6.15 mm (std)
		6.30 (service limit)
Gear Selector Fork to Groove Clearance		0.05 – 0.25 mm (std)
		0.50 (service limit)

Final Drive

Final Drive Type	Bevel geared crown wheel and pinion
Drive System	Universal-jointed shaft with torsional damper
Final Drive Ratio	2.846:1
Final Drive Oil	Castrol SAF-XO (fully synthetic hypoid oil) or equivalent
Final Drive Oil Capacity	0.17 litres

Full Specification	Rocket III Touring

Lubrication

Oil Capacity (incl. filter, dry fill)	5.9 litres
Oil and Filter Change	5.4 litres
Oil change only	5.1 litres
Recommended Oil Approval Rating	API SH (or higher) and JASO MA
Viscosity	10W/40 or 15W/50
Type	Semi or fully synthetic
Oil Pressure (in main gallery)	3.00 – 3.60 Bar at 3,500 rpm
Oil Pump Rotor Tip Clearance	0.15 mm (std – both pumps)
	0.20 mm (service limit – both pumps)
Oil Pump Body Clearance	0.15 – 0.22 mm (std – both pumps)
	0.35 mm (service limit – both pumps)
Oil Pump Rotor End Float	0.02 – 0.07 mm (std – both pumps)
	0.10 mm (service limit – both pumps)

Ignition System

Type	Digital, inductive
Electronic Rev-Limiter	6,500 rpm
Pick up Coil Air Gap	Fixed, not adjustable
Pick up Coil Resistance	0.56 KΩ
Ignition Coil Type	Inductive, twin output
Spark Plug Type	NGK DPR7EA9, 2 per cylinder
Spark Plug Gap	0.9 mm

Fuel System

Fuel Type	Unleaded, 91 RON (US - 87 RON/MON)
Fuel Tank Capacity	22.3 litres
Low Level Warning Lamp	5 litres remaining
Fuel Pump Type	Submerged, electric
Fuel Pressure (nominal)	3.0 Bar
Purge Control System	Modulated, vacuum

Fuel Injection System

Type	Multi point sequential
Idle Speed	850 rpm
Injector Type	Single nozzle
Throttle	Twin butterfly
Idle Speed Control	Stepper motor

Full Specification	Rocket III Touring
Control Sensors	Coolant temperature, manifold absolute pressure (all cylinders), intake air temperature, barometric pressure, gear position, road speed, primary and secondary throttle position.

Cooling System

Coolant Mixture	50/50 (pre mixed as supplied by Triumph)
Anti-Freeze Type	Triumph HD4X Hybrid OAT coolant
Cooling System Capacity	3.2 litres
Radiator Cap Opening Pressure	1.2 bar
Thermostat Opening Temperature	85° C
Cooling Fan Switch On Temperature	103°C
Temperature Gauge Sensor Resistance	187Ω at 100°C

Suspension

Front Fork Travel	120 mm
Recommended Fork Oil Grade	KHL34-G10
Oil Level (fork fully compressed and spring removed)	110 mm
Oil Volume (dry fill)	649 cm^3 +/- 4.0 cm^3
Front Fork Pull Through	0 mm (top of the outer tube flush with top yoke)
Fork Spring Rate	K = 16 N/mm
Rear Wheel Travel	105 mm

Brakes

Front type	Two four piston calipers acting on twin discs
Front Caliper Piston Dia.	33.96 mm/30.23 mm
Front Disc Dia.	320 mm
Front Disc Thickness	5.0 mm standard (4.5 mm service limit)
Front Disc Run-out Max.	0.3 mm
Front Master Cylinder Diameter	15.875 mm
Recommended Fluid	DOT 4
Rear Type	Twin piston sliding caliper acting on single disc
Rear Caliper Piston Dia.	32 mm
Rear Disc Dia.	316 mm
Rear Disc Thickness	7.5 mm standard (6.5 mm service limit)
Rear Disc Run-out Max.	0.15 mm
Rear Master Cylinder Diameter	14.0 mm
Recommended Fluid	DOT 4

Full Specification	Rocket III Touring

Wheels and Tyres

Front Wheel Size	MT 3.5 x 16
Front Wheel Rim Axial Run-out	0.6 mm
Front Wheel Rim Radial Run-out	0.6 mm
Front Tyre Size	150/80 R16
Front Tyre Pressure (cold)	2.48 Bar
Front Tyre Tread Depth min.	Over 130 km/h – 2 mm (or minimum legal limit, whichever is greater)
	Under 130 km/h – 2 mm (or minimum legal limit, whichever is greater)
Rear Wheel Size	MT 5.0 x 16
Rear Wheel Rim Axial Run-out	0.5 mm
Rear Wheel Rim Radial Run-out	0.5 mm
Rear Tyre Size	180/70 R16
Rear Tyre Pressure (cold)	2.83 Bar
Rear Tyre Tread Depth min	Over 130 km/h – 3 mm (or minimum legal limit, whichever is greater)
	Under 130 km/h – 2 mm (or minimum legal limit, whichever is greater)

Frame

Frame Type	Tubular steel
Overall Length	2608 mm
Overall Width	1070 mm
Wheelbase	1708 mm
Seat Height	730 mm
Castor	32°
Trail	184 mm
Dry Weight	362 kg
Max. Payload (rider, passenger, luggage & accessories)	220 kg

Electrical Equipment

Battery Rating	12 volt, 18 amp hour
Alternator Rating	37 amps/min at 2,000 rpm
	41 amps/min at 6,000 rpm

Torque Wrench Settings

Cylinder Head Area

Application	Torque (Nm)	Notes
Camshaft cover to cylinder head	12	Apply engine oil to seals
Camshaft drive chain tensioner to crankcase bolts	10	
Camshaft drive chain tensioner centre bolt	23	
Camshaft ladder to cylinder head bolts	*	Refer to section 3
Camshaft drive sprocket to camshaft bolt	15	Fit new bolt if removed
Camshaft drive chain tensioner blade to crankcase bolt	18	
Camshaft drive chain rubbing blade to crankcase bolt	18	
Camshaft drive chain top pad to head bolt	10	Refer to section 3
Cylinder head to crankcase bolts	*	Refer to section 3
Noise suppression bolt to camshaft chest	12	
Exhaust manifold to cylinder head stud (fit new studs)	10	Fit new stud if removed
Cylinder head dry seal plug	22	Apply ThreeBond 1360 to threads
Coolant bleed screw	8	
Cylinder head oil restrictor screw	15	
Spark plug	20	

Clutch

Application	Torque (Nm)	Notes
Clutch centre nut	105	Fit new Belleville washer and plain washer if removed Stake clutch centre nut to input shaft
Clutch pressure plate to basket	10	
Clutch lever clamp bolts	12	
Clutch lever pivot bolt	3	
Clutch lever pivot nut	3	

Crankshaft and Crankcases

Application	Torque (Nm)	Notes
Connecting rod big end bolts	*	Refer to section 5
Crankcase to crankcase bolts	*	Refer to section 5
Transmission shaft bearing cap	*	Refer to section 5
Main bearing ladder bolts	*	Refer to section 5
Lubrication circuit threaded inserts	45	
Crankshaft sprocket spacer bolt	27	Fit new bolt if removed
Plug coolant	80	
Check valve screw	12	

Engine Covers

Application	Torque (Nm)	Notes
Clutch cover to crankcase	12	
Clutch outer cover to inner cover	9	
Alternator cover to crankcase	12	
Output shaft cover to crankcase	28 12	M8 bolts M6 bolts
Camshaft drive chain inspection plug to clutch cover	18	Apply Dow Coring CU7439 to thread

Transmission

Application	Torque (Nm)	Notes
Detent wheel to selector drum	12	Fit a new screw if removed
Selector drum bearing retaining screw	12	Fit a new screw if removed
Spring abutment bolt	20	Apply ThreeBond 1305 to threads
Gear change actuating arm bolt	28	Fit a new bolt if removed
Input shaft bearing retainer to crankcase	12	Fit new screws if removed
Gear change lever pinch bolt	8	
Gear change rod lock nuts	6	
Splined pin front/rear gear lever rockers	12	Apply ThreeBond TB1360 to threads
Gear linkage clamp pinch bolt	8	
Gear lever assy shouldered bolt	27	
Domed locking nut	9	
Output gear to output shaft	145	Fit new Belleville washer, plain washer and nut Apply ThreeBond 1305 to threads of the nut Stake the nut to the output shaft
Torsional damper nut	185	

Lubrication System

Application	Torque (Nm)	Notes
Sump to crankcase	12	
Sump plugs (front and rear)	25	Fit new washers
Oil pick up strainers to sump	12	
Oil pick up pipes to crankcase	12	Fit new screws if removed
Oil tank drain plug to sump	25	Fit new washer if removed
Oil pressure relief valve to crankcase	15	Apply ThreeBond 1305 to threads
Oil filter adapter	10	Apply ThreeBond 1305 to threads
Oil filter	10	
Oil pumps to crankcase	12	
Oil pump sprocket to oil pump locknut	30	Fit new bolt if removed
Low oil pressure warning light switch	13	Replace washer(s) if removed
Low oil pressure warning light switch electrical contact	1.5	
Oil tank fixings	25	Replace fixing(s) if removed
Oil feed pipe main gallery	9	Replace fixing(s) if removed
Oil tank to cylinder head fixing	9	
Oil pump drive sprocket	30	Replace fixing(s) if removed
Oil scavenge pump to crankcase	12	Replace fixing(s) if removed
Oil pipe feed to gearbox	9	Replace fixing(s) if removed
Alternator cooling jet	5	Replace fixing(s) if removed
Oil pick up bolts	12	Replace fixing(s) if removed
Oil sump blanking plug	25	

Cooling System

Application	Torque (Nm)	Notes
Water pump to crankcase	10	
Radiator to frame	9	
Thermostat housing to head	8	
Fan shroud to radiator	2.5	
Cooling system bleed screw	10	
Radiator cap safety screw	1	
Fan housing to radiator	2.5	
Coolant hose clips	3	
Radiator lower bracket to crankcase	9	Replace fixing(s) if removed
Expansion tank fixings	4	
Grille fixings	3	
Upper radiator cover outer fixing	3	
Upper radiator bracket to fan cowl fixing	9	
Lower radiator bracket rubber mount fixing	9	
Radiator side cover side fixings	7	
Radiator side cover upper fixings	4	
Grille to radiator upper fixing	3	
Grille to radiator side fixing	3	
Lower fan cowl fixing	2.5	
Lower radiator cover panel fixings	4	

Fuel System, Exhaust System and Airbox

Application	Torque (Nm)	Notes
Fuel tank to frame (pivot bolt)	8	
Fuel tank to frame (front fixing)	9	Rocket III and Classic Fit new bolts
Fuel tank to frame (front fixings)	11	Rocket III Touring
Fuel pump mounting plate to fuel tank	5	Replace fixing(s) if removed
Fuel pressure regulator	3	
Fuel pressure regulator bracket	10	
Fuel pipe angled bracket fixing	10	
Fuel pump support arm to pump plate	10	
Fuel pump inlet	15	Replace fixing(s) if removed
Fuel pump baffle clip	3	
Fuel hose to fuel pump banjo bolt	15	Fit new sealing washers if removed
Fuel pump clamp screw	3	
Throttle body transition piece to cylinder head	9	
Exhaust headers to cylinder head	19	Refer to section 11
Exhaust headers to catalyst box clamp bolt	22	Rocket III, Classic and Roadster
Exhaust catalyst box to frame	22	Rocket III, Classic and Roadster
Silencer mounting bracket to frame	22	Rocket III, Classic and Roadster

Application	Torque (Nm)	Notes
Exhaust headers to exhaust link box	22	Rocket III Touring
Exhaust link box to frame	22	Rocket III Touring
Exhaust downpipe bracket cover fixing screw	10	
Exhaust cover header pipe bolt	7	
Exhaust primary cover assembly bolt	7	
Silencer cover left hand and right hand bolt	7	
Silencer cover bracket bolt	10	
Silencer to bracket bolt	27	Rocket III Roadster
Exhaust silencer mounting to pannier rail	22	Rocket III Touring
Fuel level sensor to fuel tank	5	Rocket III Touring
Air filter cover to airbox	3	
Airbox plenum chamber bolts	6	
Air inlet hose clips	1.5	
Airbox transition hose fixing	9	
Airbox trumpet cover bracket	9	
Airbox breather pipe rubber mount	9	
Airbox to bracket	9	
Oxygen sensor	40	
Air temperature sensor	4	
Manifold absolute pressure sensor	6	
Barometric pressure sensor	6	
Fall detection switch	3	Replace fixing(s) if removed
Road speed sensor	7.5	
Throttle body to transition piece clip	1.5	
Idle speed controller	3.5	
Engine coolant temperature sensor	18	Apply ThreeBond TB1374 to thread
Crankshaft position sensor	8	
Throttle position sensor	3.5	
Fuel injectors rail	5	
Throttle Bodies bracket (front)	6	
Ignition coils and alarm brackets	9	
Air Temp sensor adapter plug	18	Apply ThreeBond 1374 to threads
Transition support bracket bolts	9	
Gear position sensor screw	5	

Rear Suspension

Application	Torque (Nm)	Notes
Swinging arm pivot bolt – fixed (left hand)	100	Refer to section 13
Swinging arm pivot bolt – adjustable (right hand)	15	Refer to section 13
Swing arm pivot bolt lock ring (right hand)	100	Refer to section 13
Rear suspension unit upper mounting bolt	28	Fit a new bolt if removed
Rear suspension unit lower mounting bolt	28	Fit a new bolt if removed
Rear brake caliper torque reaction bolt	69	Fit a new bolt if removed
P-clip to swingarm fixing	6	
Swinging arm spindle pinch bolt	40	

Front Suspension

Application	Torque (Nm)	Notes
Upper yoke pinch bolt	20	
Lower yoke pinch bolt	25	Rocket III, Classic and Roadster
Lower yoke pinch bolt	27	Rocket III Touring
Fork top cap to inner tube	30	Rocket III Touring
Fork top cap to inner tube	23	Rocket III, Classic and Roadster
Upper yoke centre nut	65	
Damping cylinder bolt	40	Rocket III, Classic and Roadster
Damping cylinder bolt	30	Rocket III Touring
Handlebar clamp to top yoke lock nuts	35	
Handlebar clamp bolt	26	Rocket III and Classic up to VIN 251569 Tighten front bolts first then rear bolts
Handlebar clamp bolt	45	Rocket III and Classic from VIN 251569 Tighten front bolts first then rear bolts
Handlebar clamp bolt	26	Rocket III Touring and Roadster Tighten front bolts first then rear bolts
Handlebar clamp cover plate bolts	3	Rocket III and Classic
Upper yoke cable guide	7	
Handlebar end weights	8	
Lower fork shroud	9	
Chrome shroud to upper yoke bolts	9	
Screen upper to upper yoke	15	
Front fork Infill shroud fixings	9	
Fork protector bolts	9	
Ignition switch mount casting	9	
Ignition switch mount casting wire guide	9	
Headstock adjuster nut	*	See text

Wheels

Application	Torque (Nm)	Notes
Front wheel spindle/axle bolt	65	
Fork to wheel spindle pinch bolts	22	
Rear wheel spindle flanged locknut	110	
Final drive flange bolts	85	
Bevel box drain plug	15	
Bevel box filler	60	
Bevel box to swinging arm stage 1	20	Stage 1 of 2
Bevel box to swinging arm stage 2	64	Stage 2 of 2
Transmission output shaft damper nut	185	
Tyre valve assembly front/rear	6	Replace valve if removed

Front Brakes

Application	Torque (Nm)	Notes
Caliper to fork	50	
Pad retaining pin (hexagon drive)	18	
Caliper bleed screw	6	
Hose to caliper	25	Fit new sealing washers if removed
Master cylinder to handlebar	12	Tighten top bolt first
Hose to master cylinder	25	Fit new sealing washers if removed
Disc to wheel	22	Fit new bolts if removed
Brake lever pivot bolt	1	
Brake lever pivot bolt locknut	6	
Caliper split half bolts	24	Fit new bolts if removed
Front brake hose to lower yoke clip	9	
Front brake lever adjuster nut	2	
Brake reservoir cap fixings	2	

Rear Brakes

Application	Torque (Nm)	Notes
Caliper bleed screw	8	
Hose to caliper	25	Fit new sealing washers if removed
Master cylinder to frame	27	Rocket III Touring
Master cylinder to frame	16	Rocket III Roadster
Master cylinder reservoir to frame	7	
Hose to brake pipe joint	25	Fit new sealing washers if removed
Hose to brake light switch	15	Fit new sealing washers if removed
Brake disc to wheel	22	Fit new bolts if removed
Rear brake caliper torque reaction bolt	69	Fit a new bolt if removed
Rear brake hose caliper clip	7	
Rear brake reservoir cover locknut	3	Fit a new nut if removed
Rear brake reservoir nut	7	Fit a new nut if removed
Rear brake line switch adaptor	7	Rocket III Roadster
Inline adaptor to frame fixing	20	
Reservoir cap screw	2	
Hard line to inline adaptor	25	
Brake pedal pivot bolt	27	Fit a new bolt if removed
Hard line to rear master cylinder	25	Fit new sealing washers if removed

ABS System

Application	Torque (Nm)	Notes
Front wheel speed sensor to fork leg	7	
Rear wheel speed sensor to caliper carrier	7	
Front pulser ring to front wheel hub	5	
Rear pulser ring to rear brake disc	5	
ABS modulator to mounting bracket	9	
ABS modulator mounting bracket to frame	27	
Rear master cylinder hard line	17	
ABS modulator heatshield	9	
ABS modulator mounting inner bracket to frame	5	
Brake line clamp bolts	9	
Front brake hose P-clip	9	
Front master cylinder hard line	17	
ABS modulator hard line to caliper hose union 12 mm	19	
ABS modulator union hard line to caliper hose 10 mm	17	
ABS modulator hard line to brake switch hose	17	
Rear brake light switch	15	

Footrests and Control Plates

Application	Torque (Nm)	Notes
Rear footrest to hanger	27	Fit a new lock nut if removed, Rocket III, Classic and Roadster
Side stand bracket	40	
Side stand pivot bolt	25	
Side stand pivot lock nut	25	Fit a new nut if removed
Side stand bump stop bracket	27	
Side stand switch	5	Fit new fixings if removed
Right hand heel guard	18	Rocket III, Classic and Roadster
Right hand heel guard	7	Rocket III Touring
Bank angle indicator	10	Rocket III, Classic and Roadster
Bank angle indicators to footboards	7	Rocket III Touring
Gear change pin	12	Rocket III, Classic and Roadster
Dresser bar lower bolts	24	
Headstock cover bolts	3	
Rider foot control mounting assembly	24	Rocket III Touring and Roadster
Rider foot control mounting assembly	27	Rocket III and Classic
Outrigger cover	3	
Rear footboard bracket	27	Rocket III Touring
Rear footboard pressing to casting	9	Rocket III Touring
Rider footrest rubber	4	Rocket III, Classic and Roadster

Bodywork

Application	Torque (Nm)	Notes
Engine to frame bolts	See text	
Front mudguard	27	Rocket III, Classic and Roadster
Front mudguard	19	Rocket III Touring
Front mudguard finisher to mudguard	3	Rocket III, Classic and Roadster
Rear mudguard brace	9	Rocket III, Classic and Roadster
Rear mudguard to frame M5 fixing	5	Rocket III, Classic and Touring
Rear mudguard cover front fixing	45	
Rear mudguard cover rear fixing	24	
Rear seat to mudguard	9	Rocket III and Roadster
Seat side fixings	15	Rocket III Touring
Seat rear fixing	9	Rocket III Touring
Seat bracket to seat	10	Rocket III Touring
Seat strap	10	
Air intake tract to seat	3	Rocket III Classic and Touring
Pannier rail dresser bar	22	Rocket III Touring
Pannier mounting rail front fixings	30	Rocket III Touring
Pannier mounting rail upper bolt	50	Rocket III Touring, Replace fixing's if removed
Pannier rail link bar	22	Rocket III Touring
Pannier latch mechanism fixing	4	
Pannier latch striker fixing	4	
Pannier latch cover fixing	4	
Pannier hinge bracket and cover fixing	4	
Pannier lock mechanism fixing	4	
Pannier support pressing lower fixing	3	
Pannier support pressing upper fixing	4	
Sissy bar bracket to frame lock nuts	45	
Sissy bar to backrest	27	
Luggage rack rear reflector bracket bolt	9	
Backrest to sissy bar	8	
Sissy bar lock levers	9	
Side covers to frame	9	Rocket III, Classic and Roadster
Engine infill panels to frame	3	
Windscreen mounting bolts	15	Rocket III Touring
Instruments bracket cover	9	
Instrument cover	1	
Embellisher fixings	7	
Screen to upper yoke bracket	15	
Side panel Infill moulding left hand and right hand	3	
Side panel front and rear fixings	9	
Engine panel Infill moulding left and right hand	3	

Application	Torque (Nm)	Notes
Riders backrest to frame	10	
Screen M6 x 20 screws	9	
Screen M6 x 16 screws	9	
Mirror fixing	4	Rocket III Touring
Mirror fixing	10	Rocket III, Classic and Roadster
Lock barrel bolt	12	Replace fixing(s) if removed
Lock Fuel filler bolt	4	
Lock seat latch housing screw	5	
Lock cable seat housing screw	5	

Electrical

Application	Torque (Nm)	Notes
Starter motor to engine	28	
Starter solenoid nut	7	
Alternator rotor to crank	120	
Alternator stator to crankcase	12	Replace fixing(s) if removed
Alternator rectifier to bracket	9	
Alternator cover to crankcase	12	
Alternator wire retainer to lower crankcase	12	Replace fixing(s) if removed
Rear light to bracket	7	Rocket III, Classic and Roadster
Rear light to mudguard	7	Rocket III Touring
Number plate light to bracket	9	Rocket III, Classic and Roadster
Front indicators to brackets	9	Rocket III, Classic and Roadster
Rear indicators to bracket nut	10	Rocket III, Classic and Roadster
Indicators to bracket screw	18	Rocket III Touring
Indicator lenses to indicators	2	Rocket III, Classic and Roadster
Headlight horizontal adjuster	30	Rocket III, Classic and Roadster
Headlight vertical adjuster	20	Rocket III, Classic and Roadster
Headlight horizontal adjuster	35	Rocket III Touring
Headlight vertical adjuster	12	Rocket III Touring
Headlight rim screws	2	Rocket III Touring
Front fog light vertical adjuster	18	Rocket III Touring
Front fog light horizontal adjuster	27	Rocket III Touring
Auxiliary lamp bracket to yoke	9	
Front indicator assembly to brkt	18	Rocket III Touring
Front indicator bracket	9	Rocket III Roadster
Front indicator bracket	8	
Front indicator body to bracket	9	Rocket III Roadster
Front/rear indicator lens	2	Rocket III Roadster
Rear indicator assy to bracket	10	Rocket III Roadster
Rear indicator assy to bracket	18	Rocket III Touring
Ignition coil fixings	9	

Application	Torque (Nm)	Notes
Ignition switch	5	
Earth lead sub harness	18	
Wire retainer to alternator cover bolt	8	
Horn	18	
Horn bracket	27	Rocket III Roadster
Horn cover	3	Rocket III Roadster
Instrument nachelle to speed clips	7	Rocket III Touring
Instrument assembly to nachelle	5	Rocket III Touring
Switch cube screws (left)	2.5	
Switch cube screws (right)	2.5	
Battery tray fixings	9	
Battery tray plastic fixing	9	
ECU bracket fixings	3	
ECU retaining strap	5	
Headlight to bracket	12	Rocket III Touring
Headlight bezel clamp	2	Rocket III, Classic and Roadster
Headlight bracket to yoke	35	Rocket III Touring
Headlight to bracket	15	Rocket III, Classic
Headlight bracket to frame	15	Rocket III, Classic
Headlight bracket cover	3	Rocket III, Classic
Headlight bracket to pivot	20	Rocket III Roadster
Headlight pivot to headlight	30	Rocket III Roadster
Headlight pivot cover	3	Rocket III Roadster

Routings

Clutch Cable Routing - Rocket III, Classic and Roadster

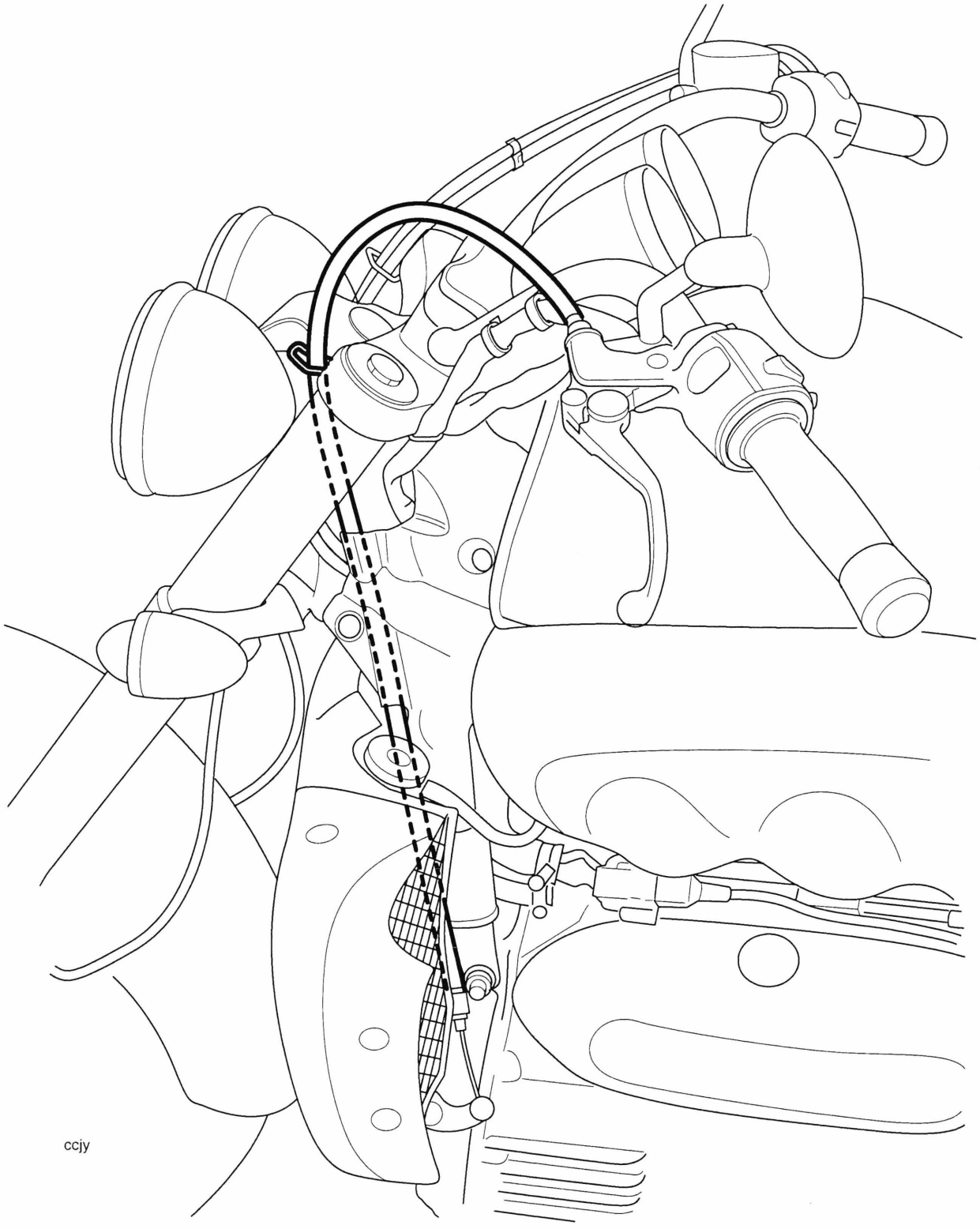

Clutch Cable Routing - Rocket III Touring

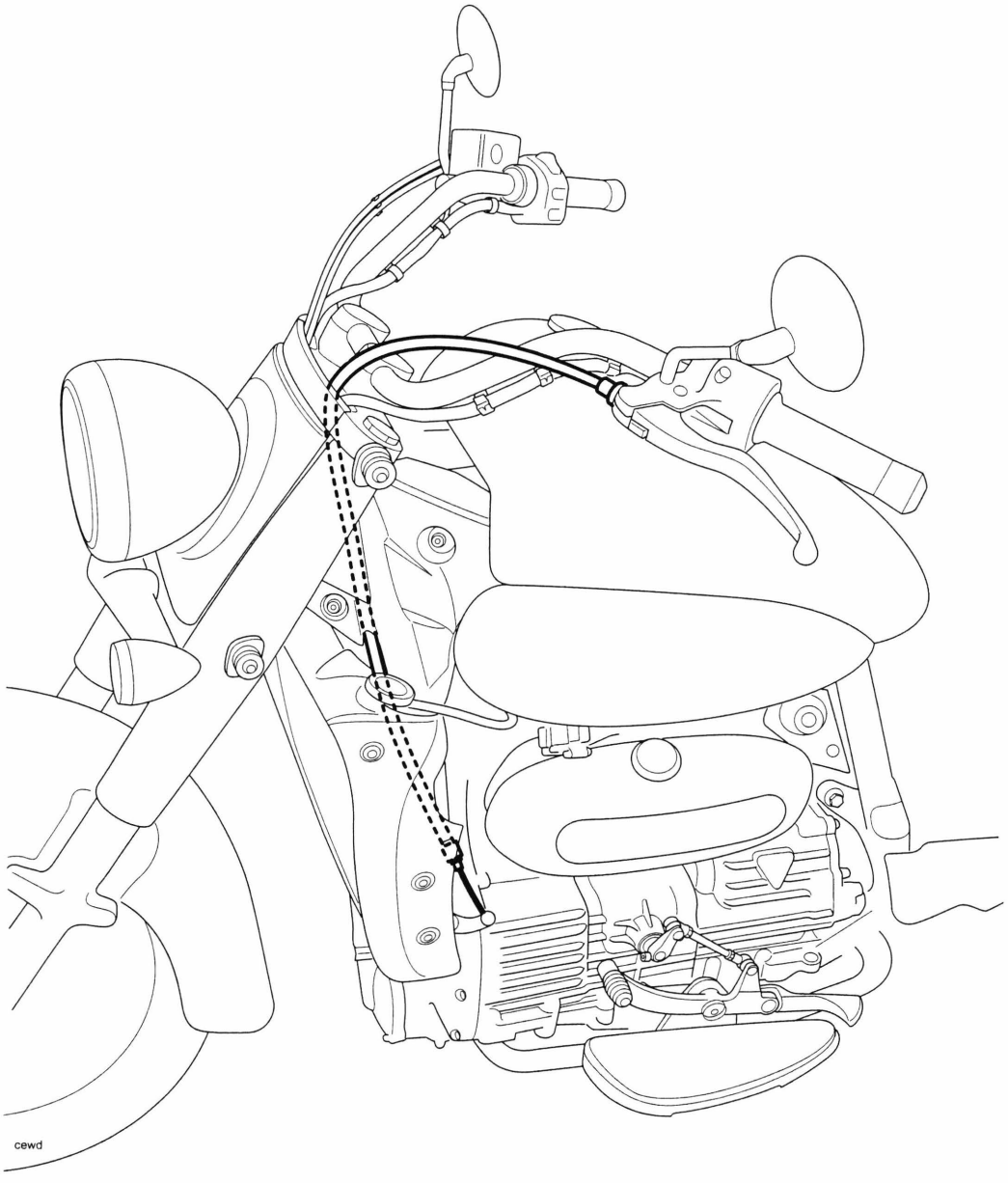

Handlebar Cable Routing - Rocket III, Classic and Roadster

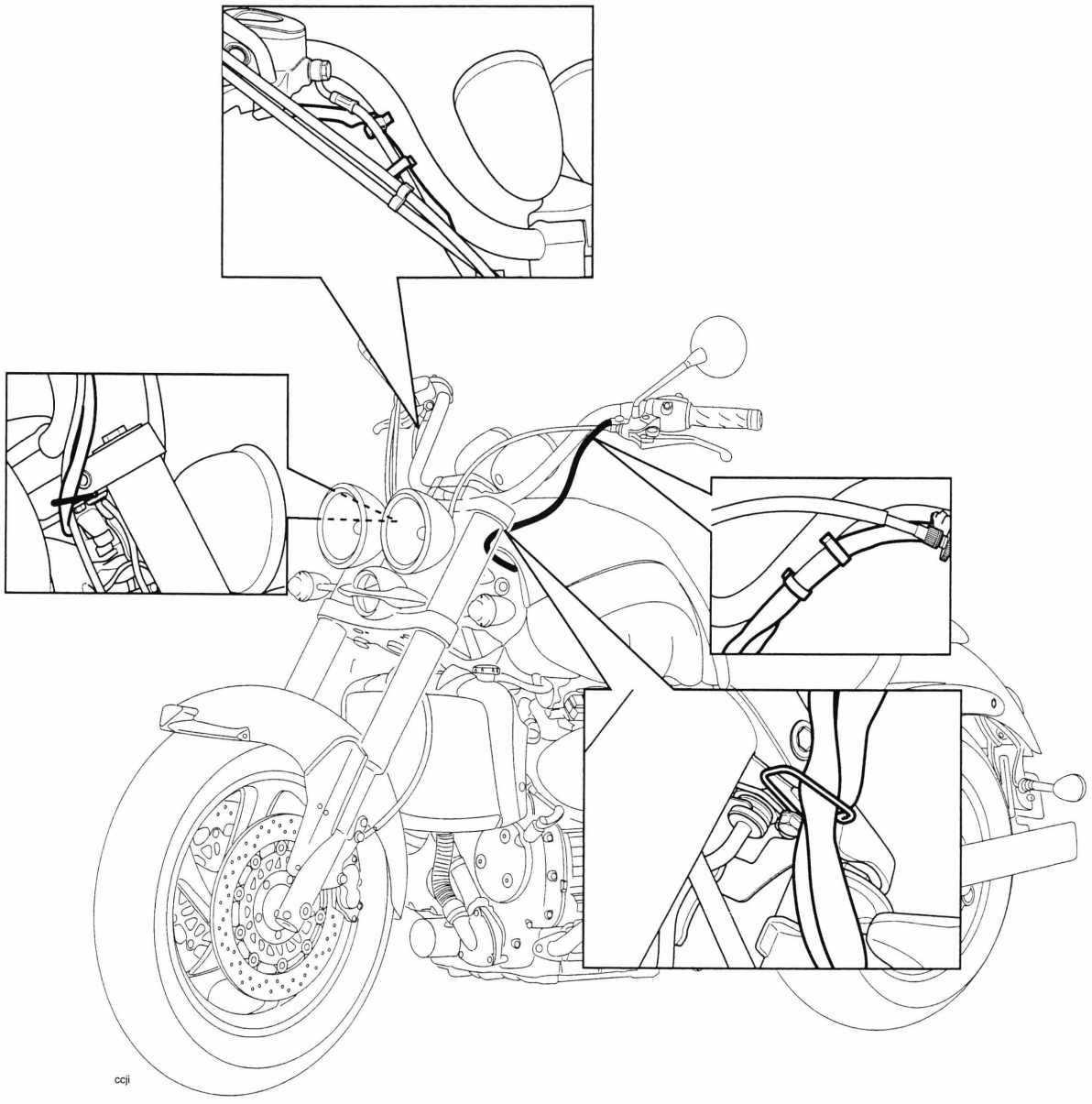

Handlebar Cable Routing - Rocket III Touring

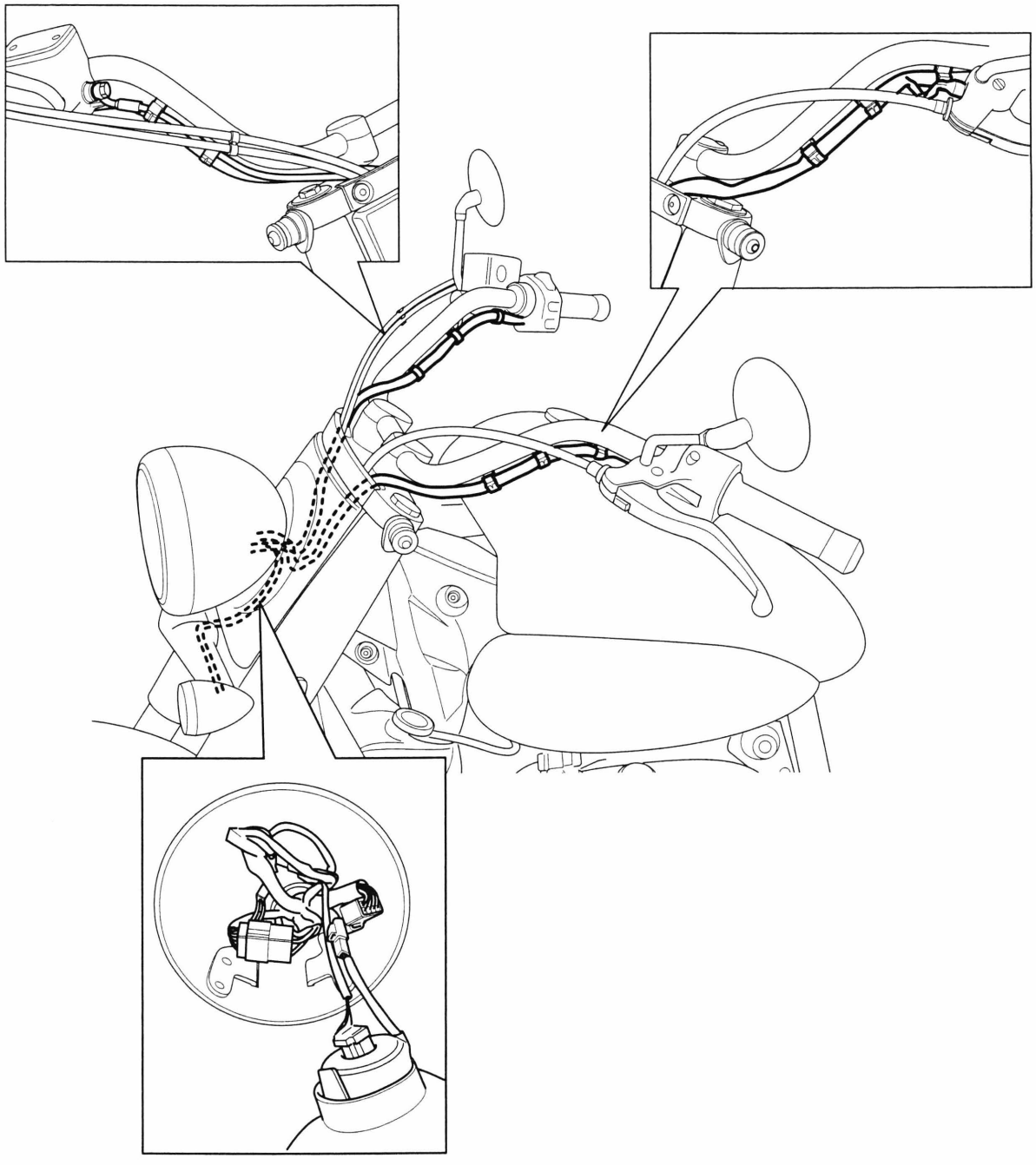

ceyn

Main Wiring Harness Routing - Rocket III, Classic and Roadster

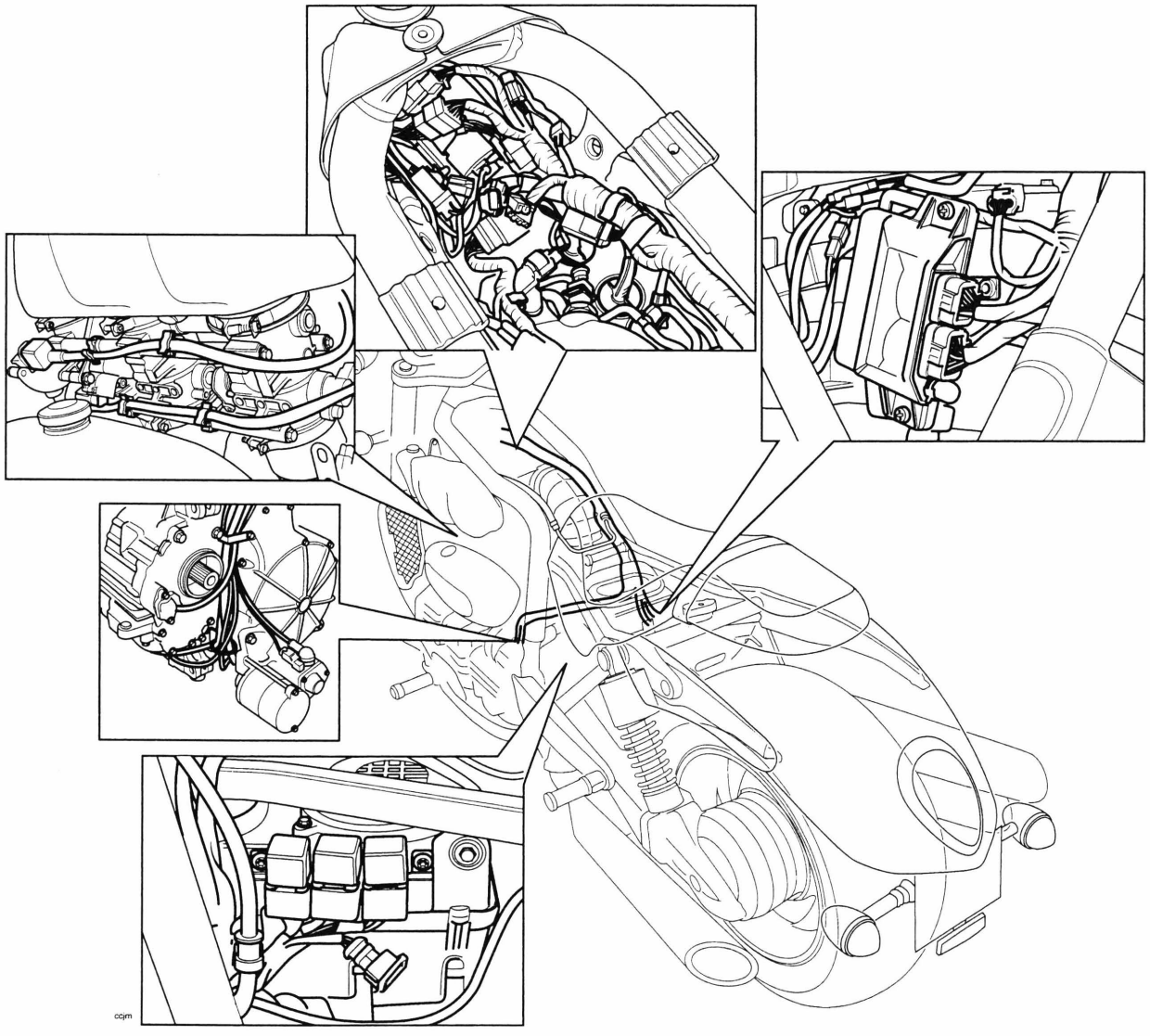

Main Wiring Harness Routing - Rocket III Touring

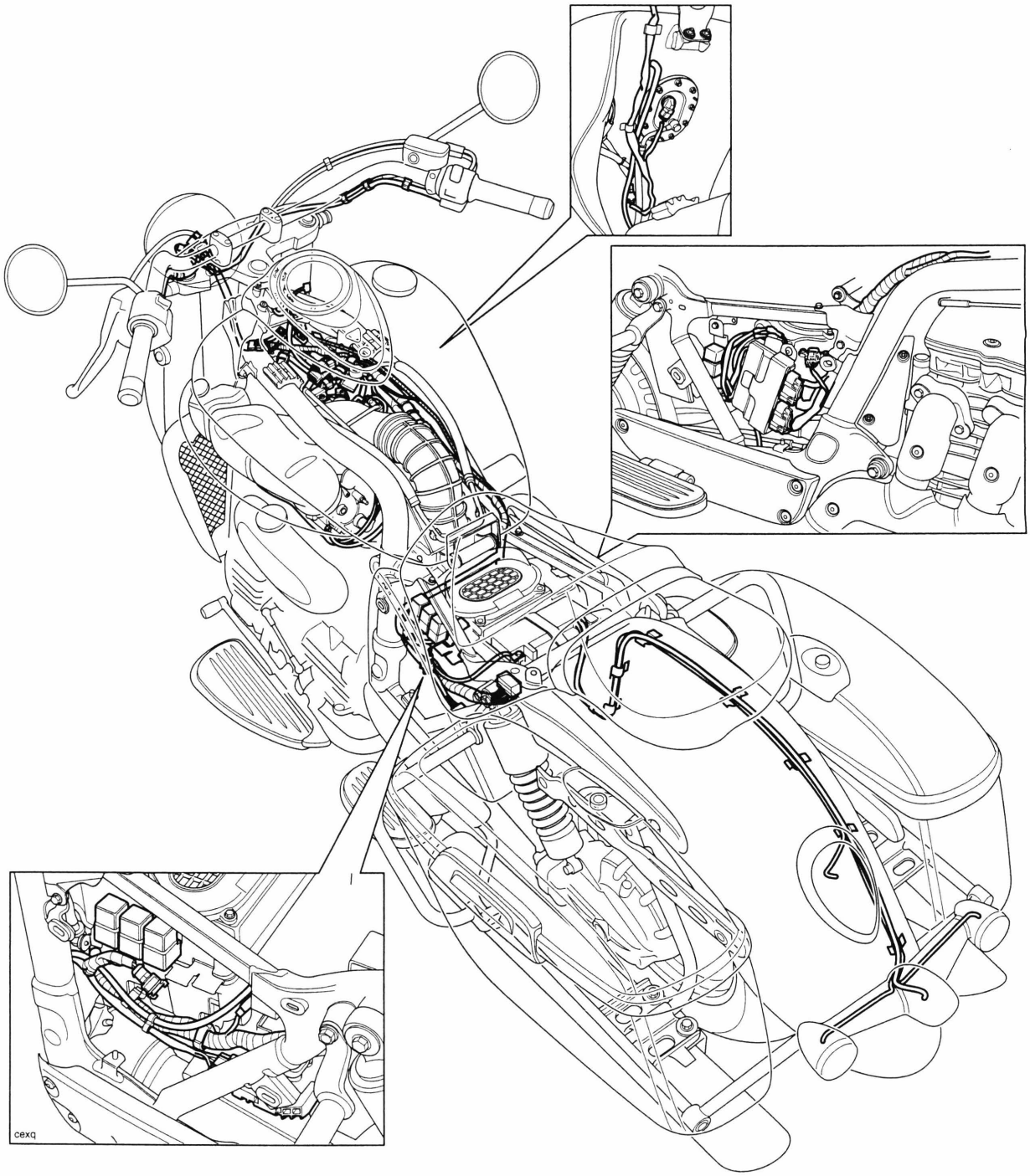

Rear Mudguard Harness Routing - Rocket III, Classic and Roadster

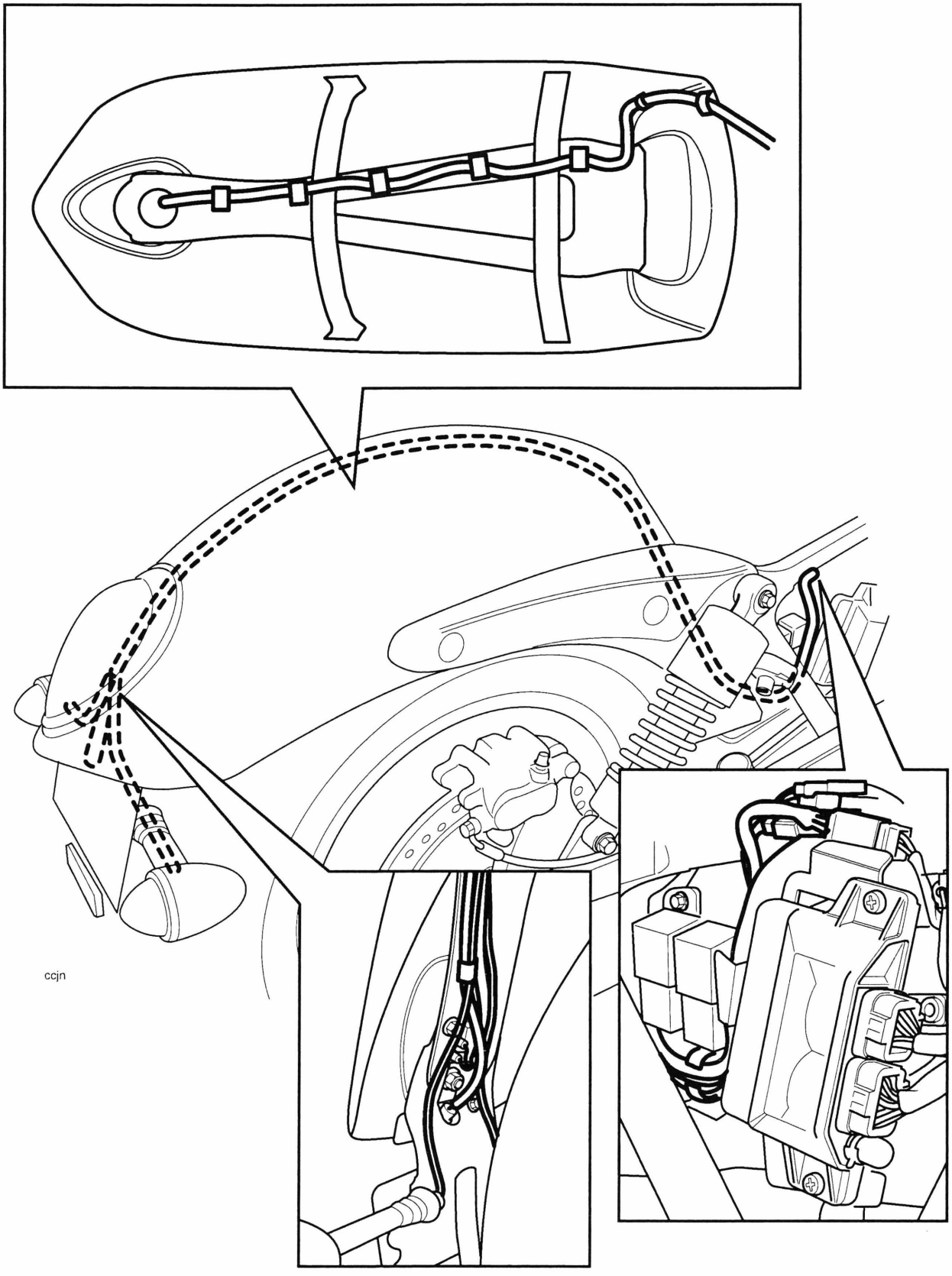

Rear Mudguard Harness Routing - Rocket III Touring

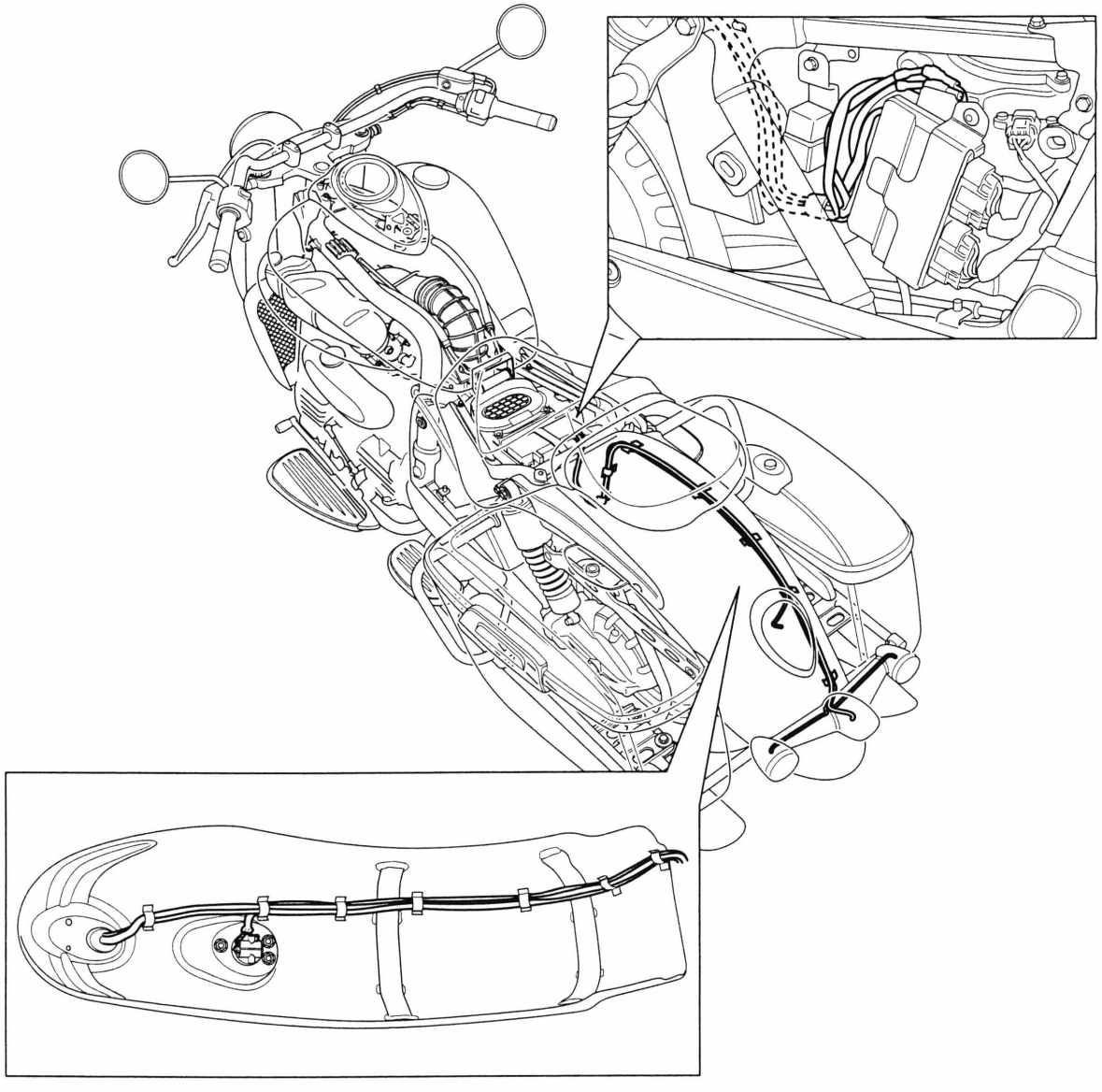

ceyo

Front Brake Hose Routing - Rocket III and Classic

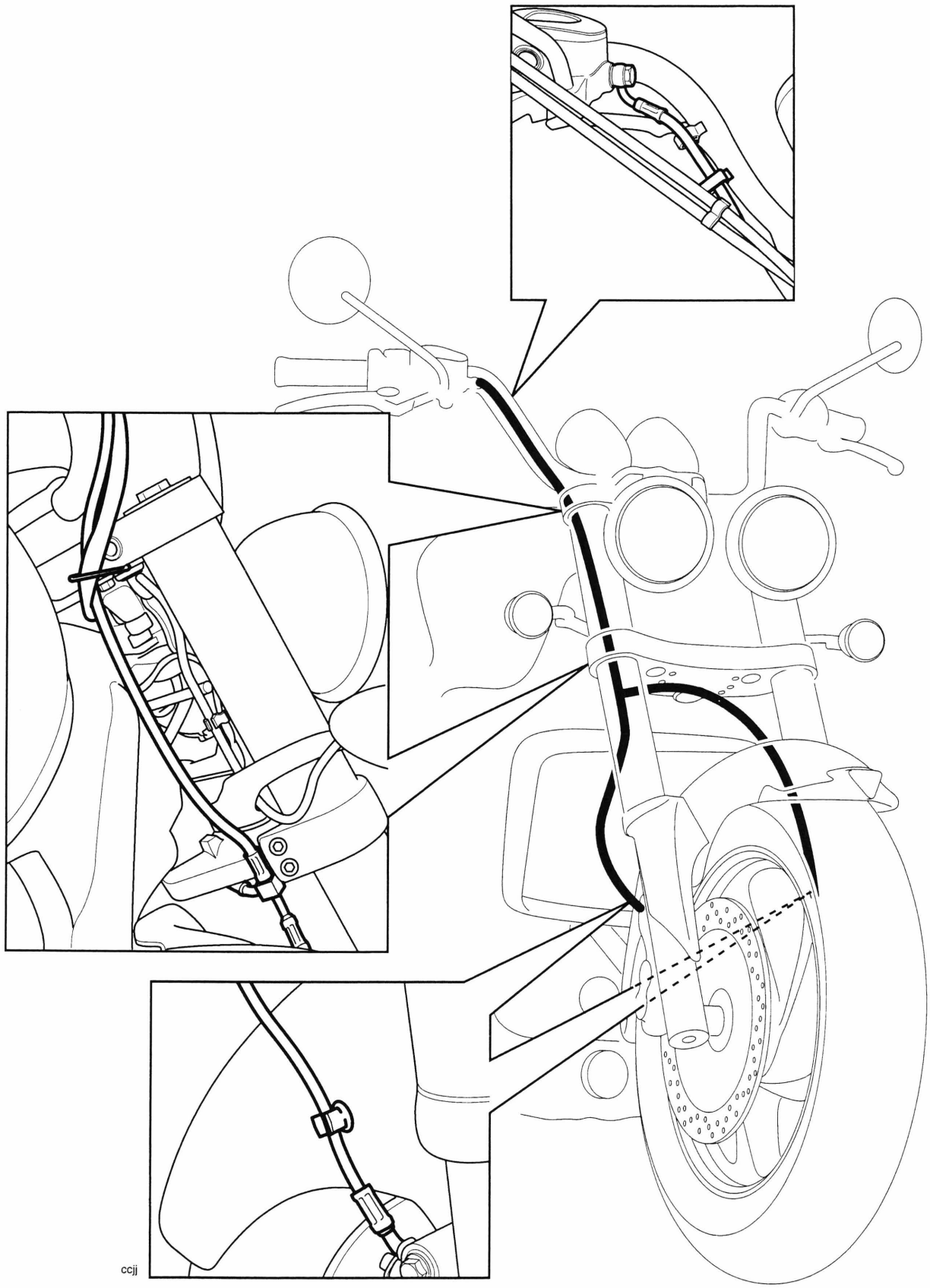

Front Brake Hose Routing - Rocket III Touring

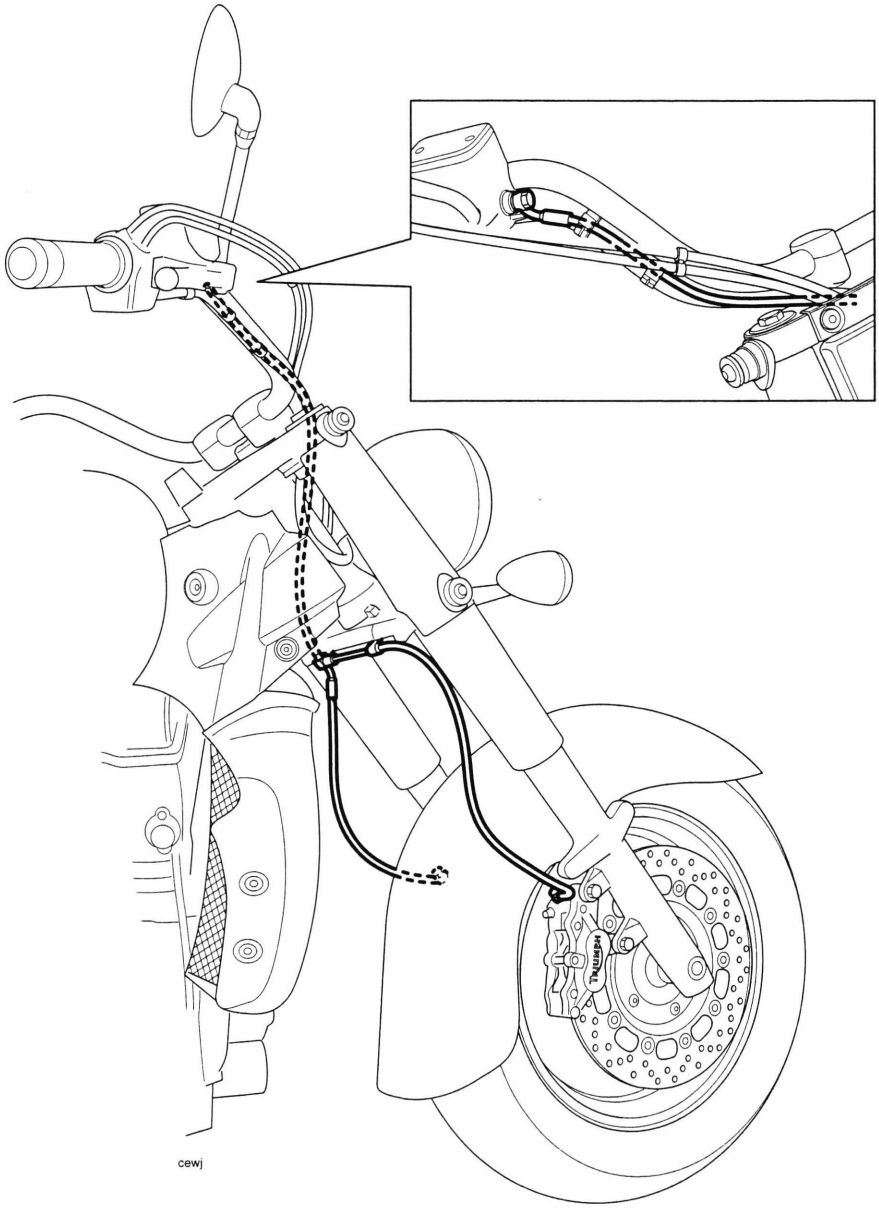

Rear Brake Pipe and Hose Routing - Rocket III and Classic

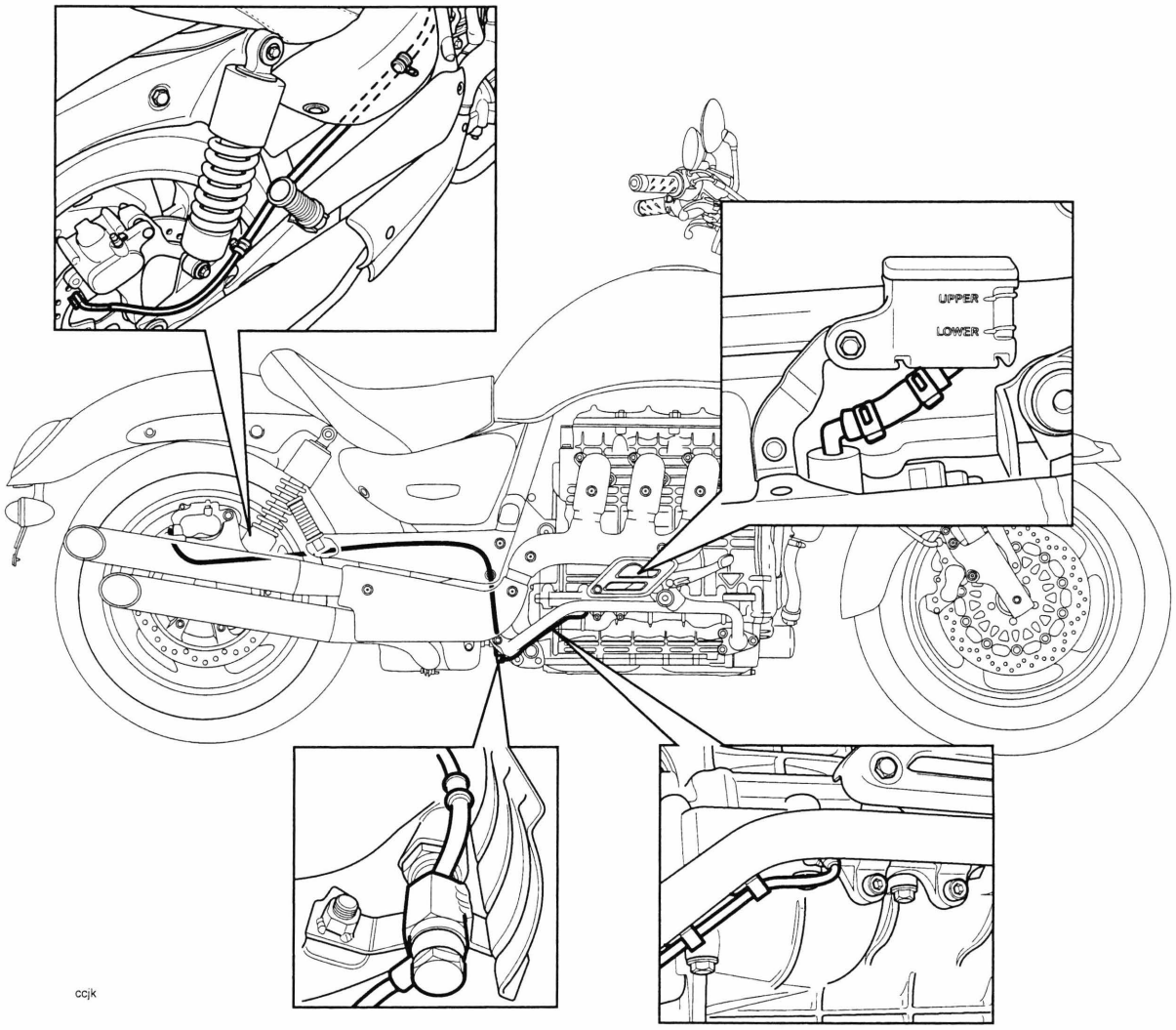

Rear Brake Pipe and Hose Routing - Rocket III Touring

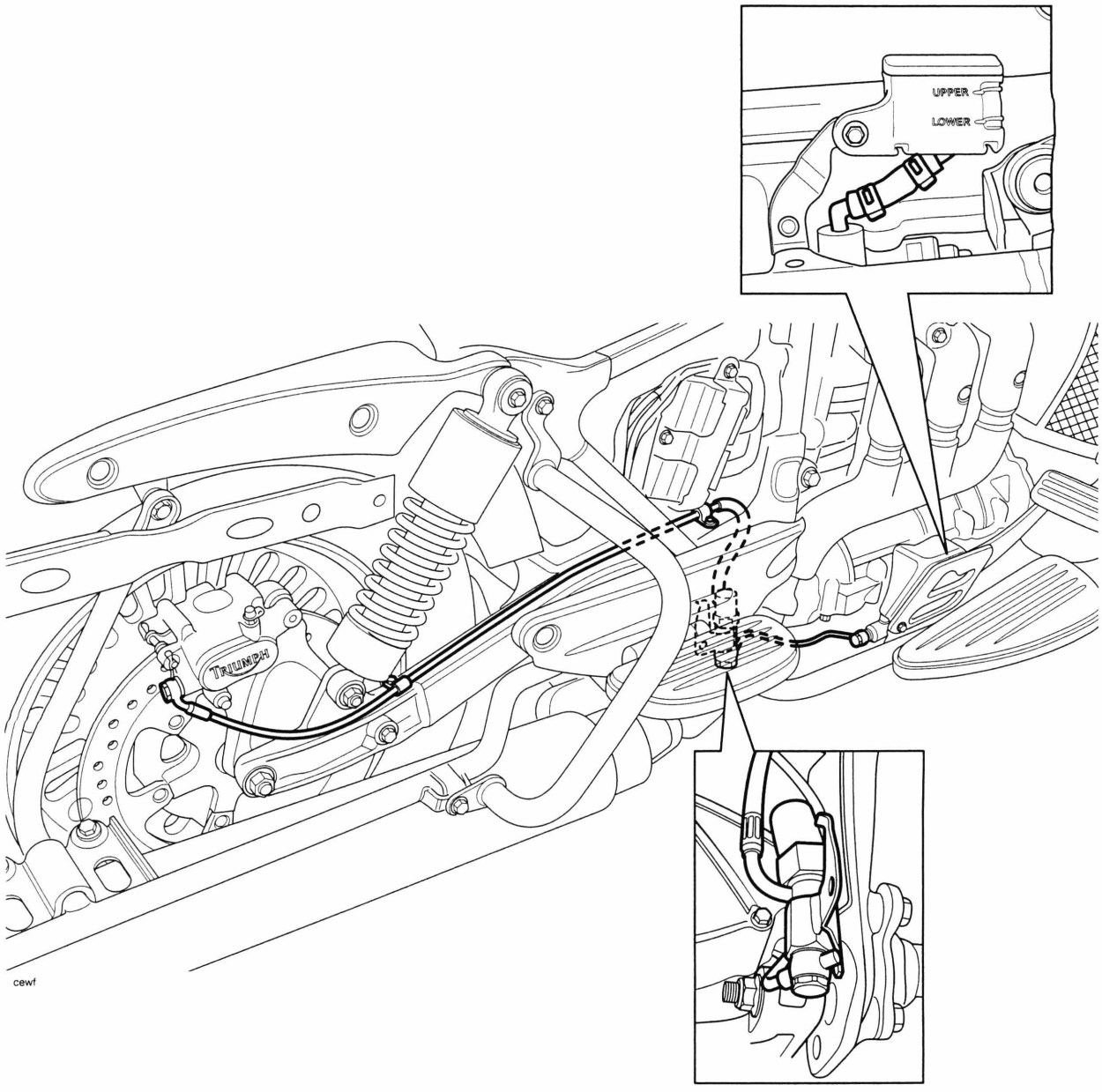

Brake Pipe and Hose Routing - Rocket III Roadster

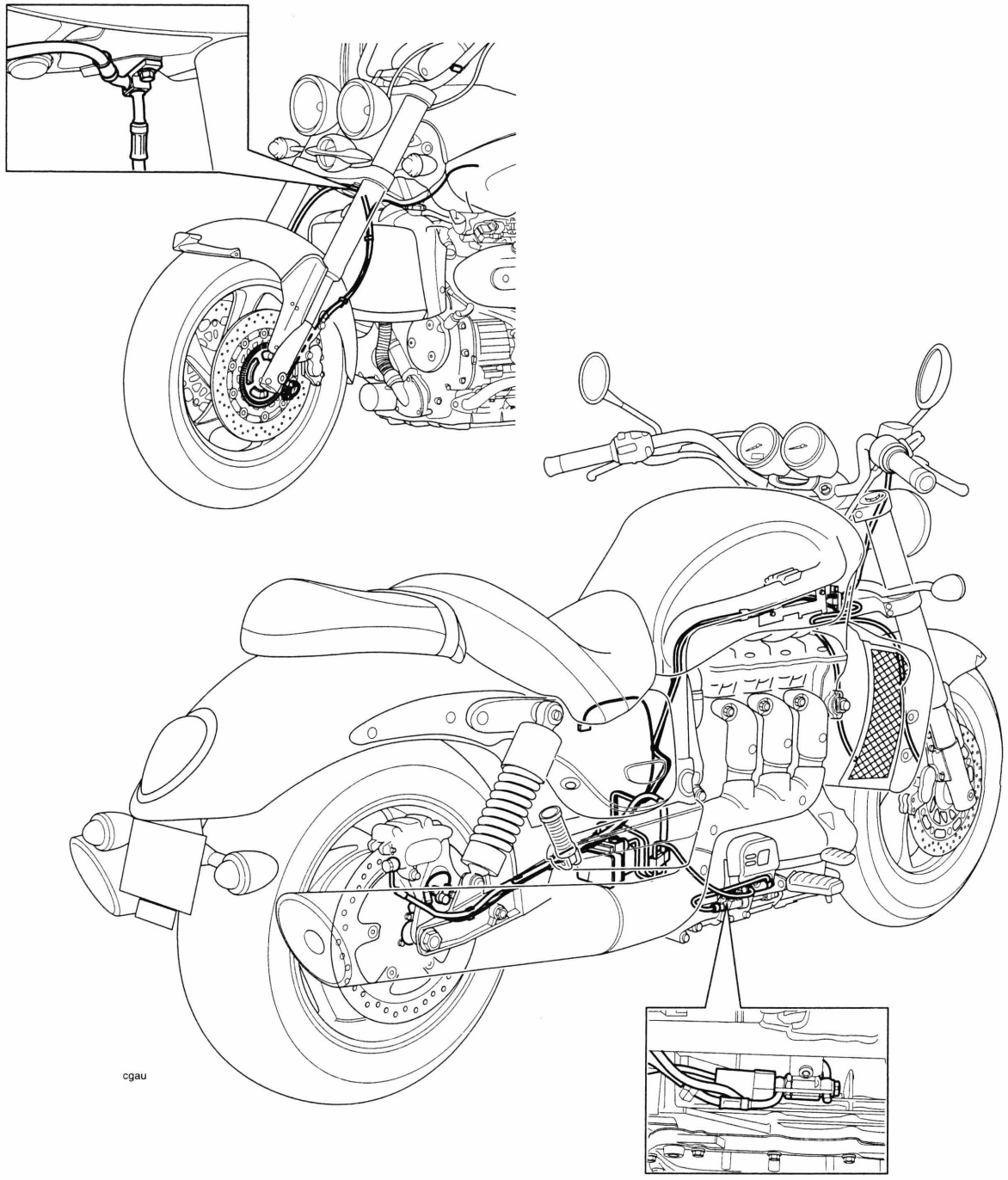

Throttle Cable Routing - Rocket III, Classic and Roadster

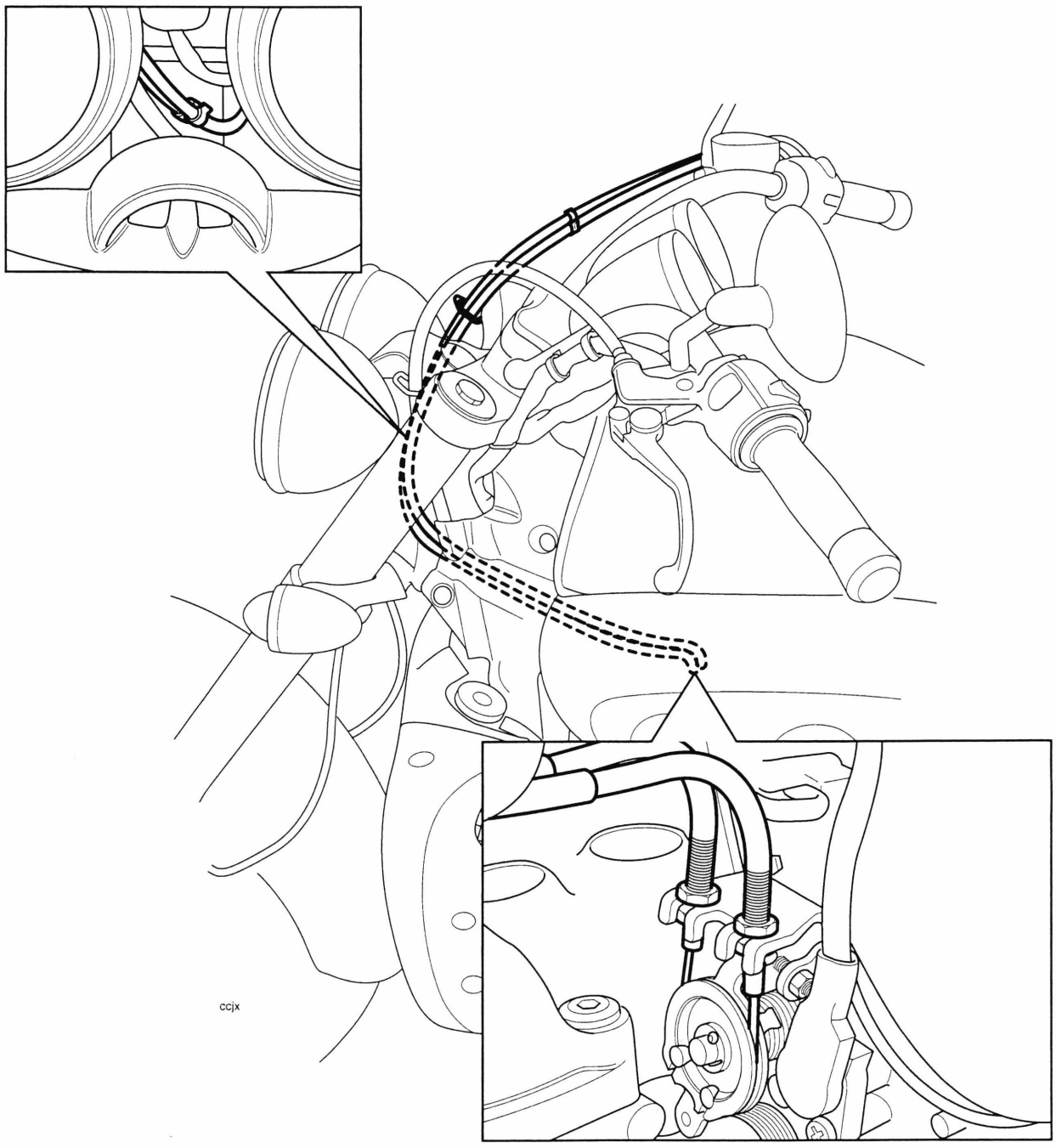

Throttle Cable Routing - Rocket III Touring

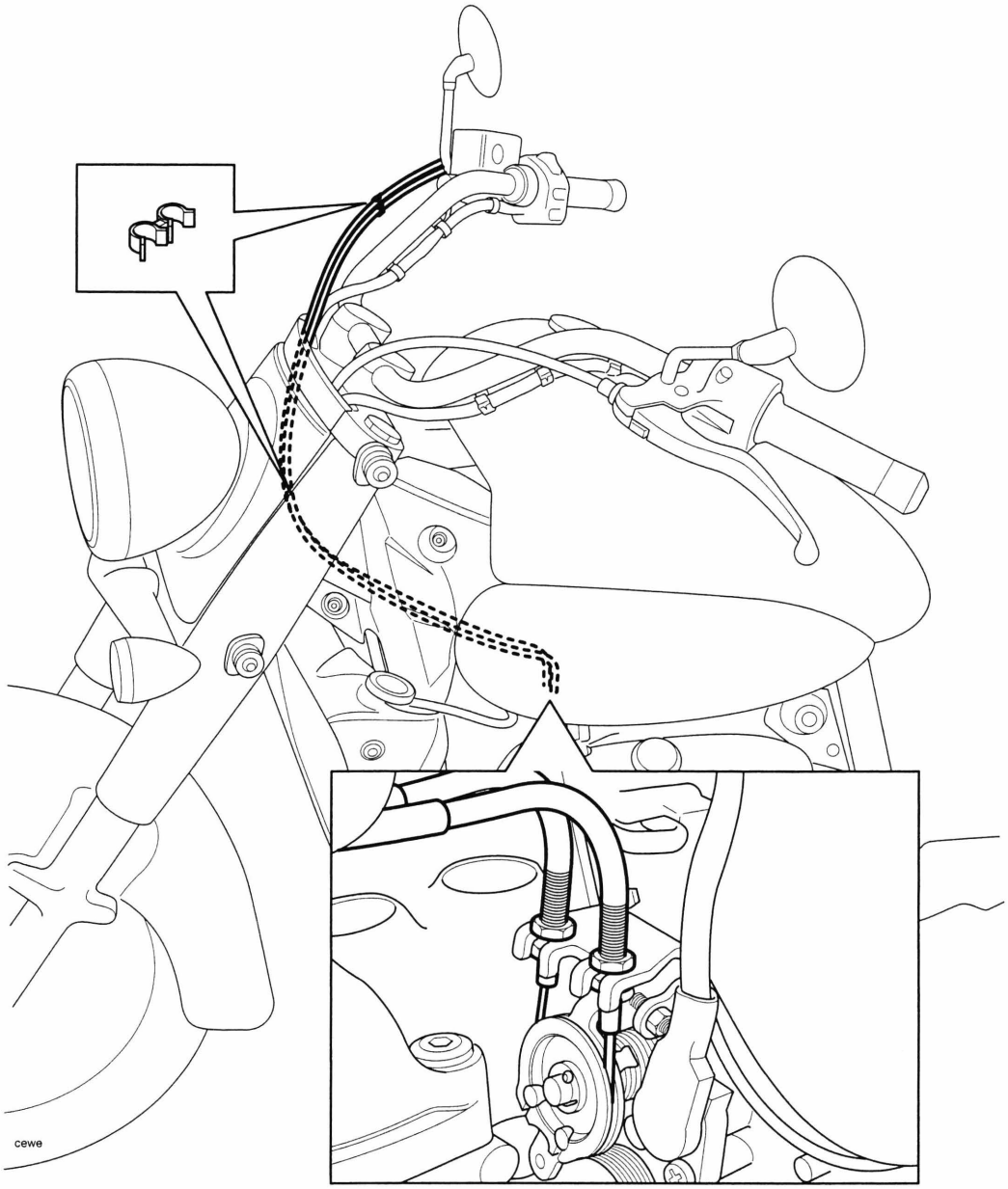

Fuel Hose and Fuel Tank Breather Hose Routing (non-evaporative emission control versions) - Rocket III, Classic and Roadster

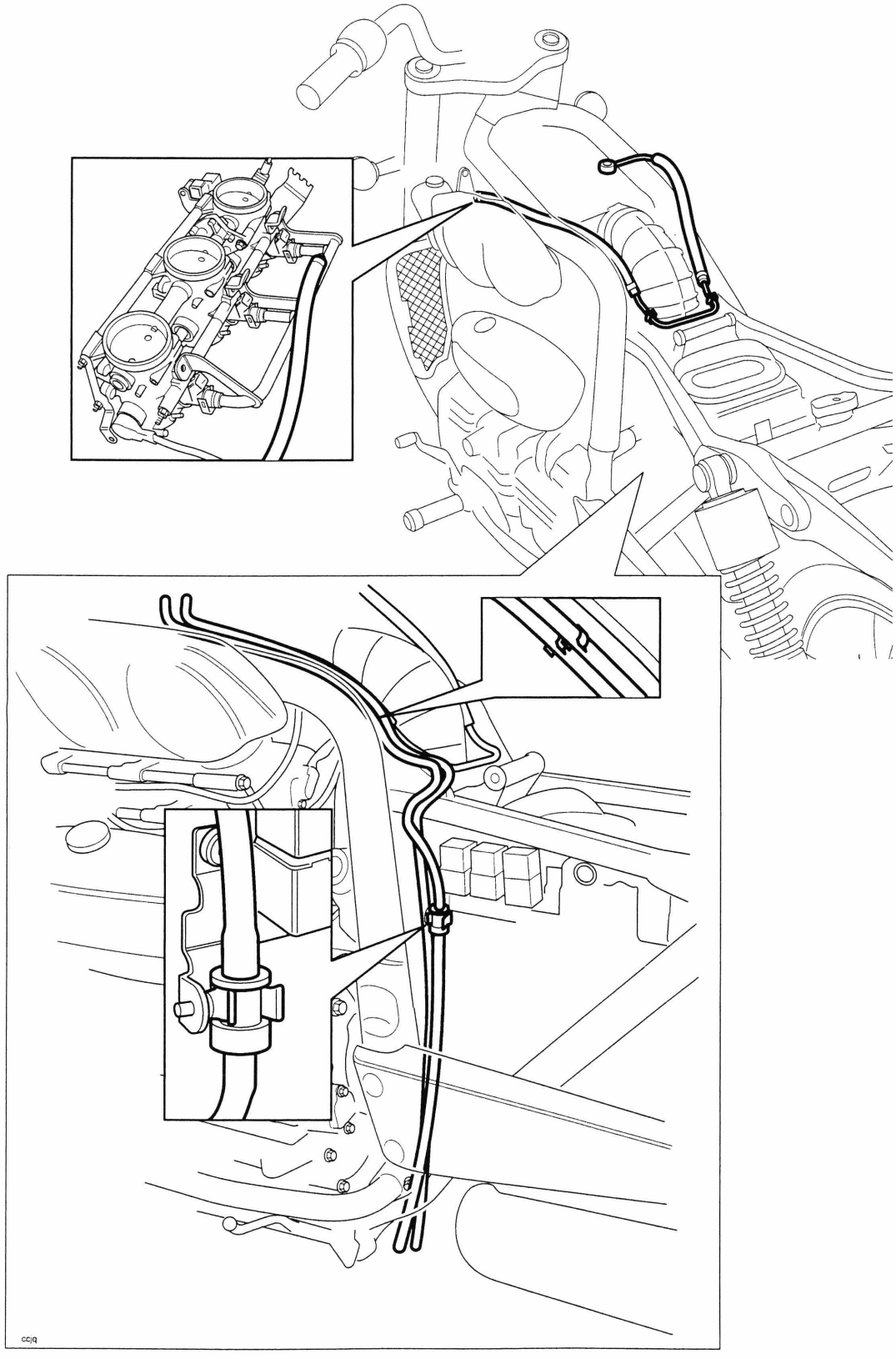

Fuel Hose and Fuel Tank Breather Hose Routing (non-evaporative emission control version) - Rocket III Touring

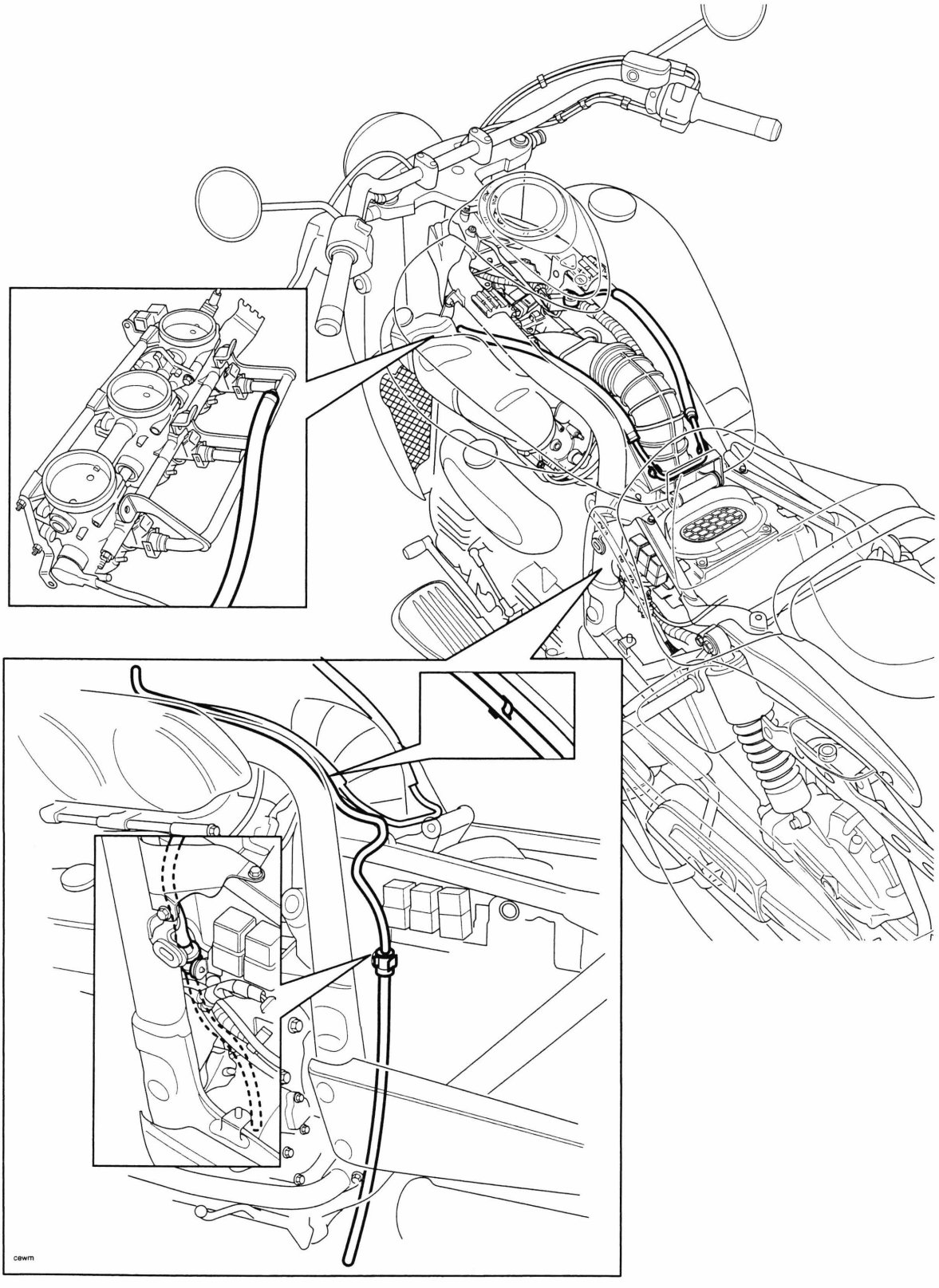

Fuel Hose and Evaporative/Fuel Tank Breather Hose Routing - Rocket III, Classic and Roadster

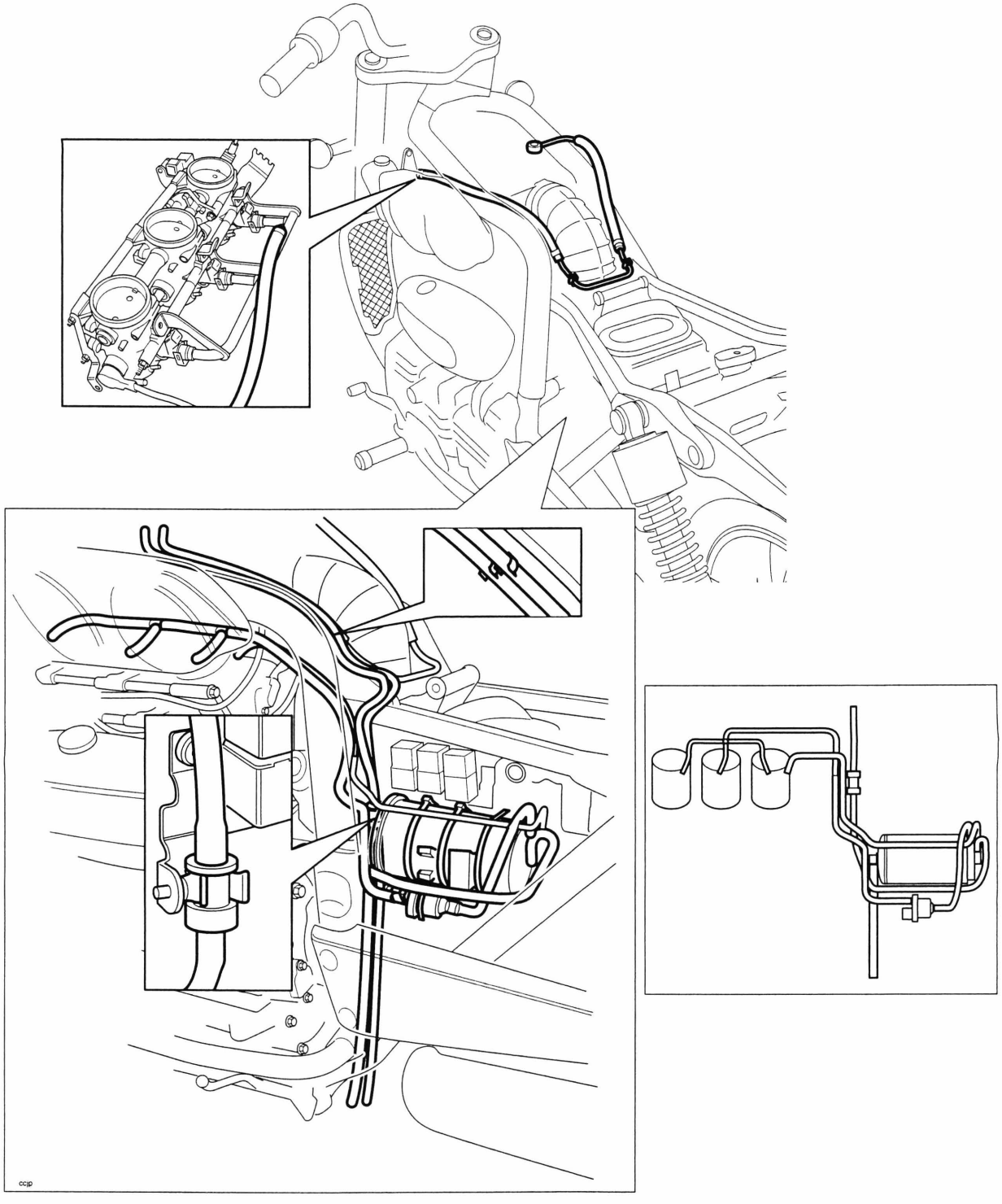

Fuel Hose and Evaporative/Fuel Tank Breather Hose Routing - Rocket III Touring

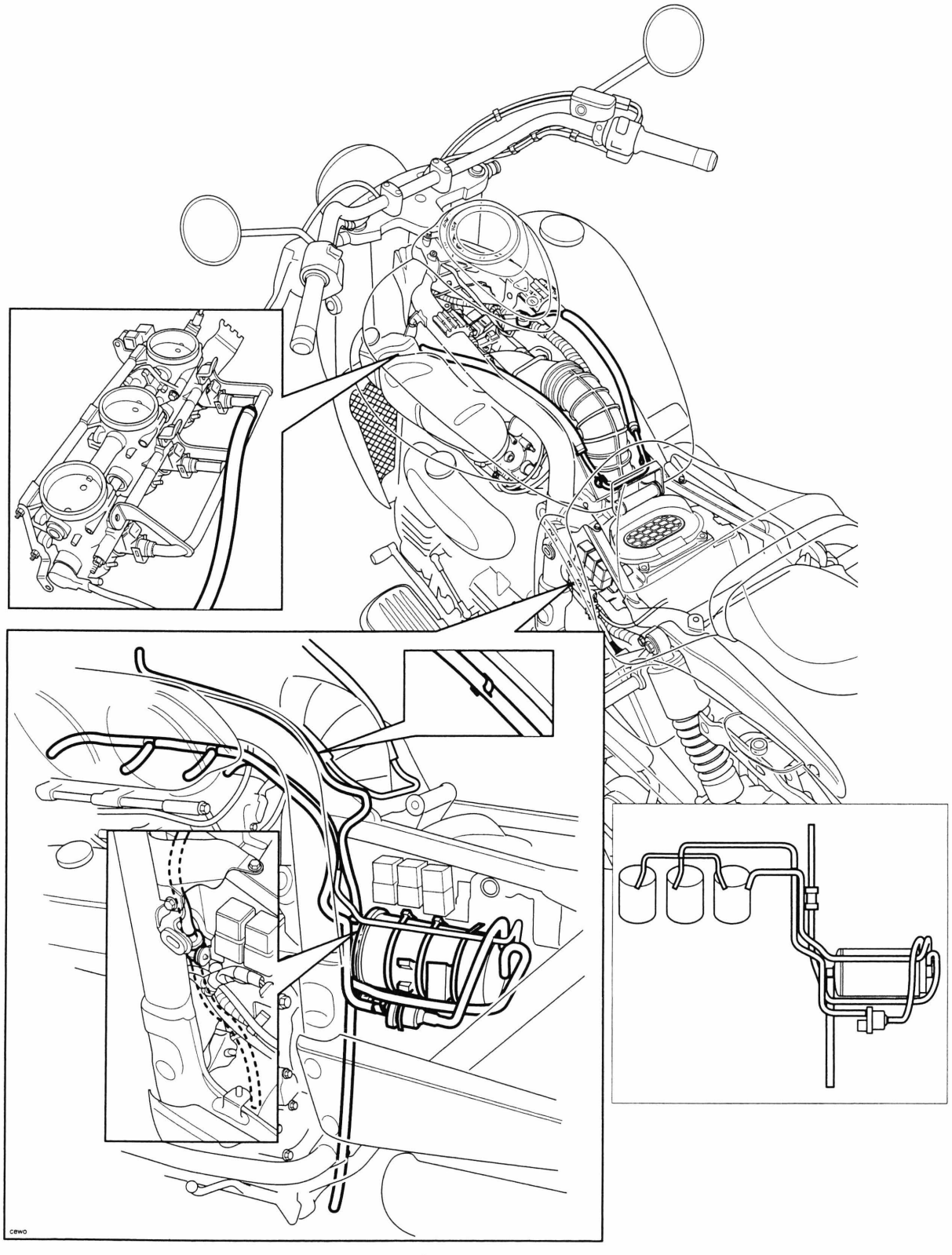

This page intentionally left blank

2 Scheduled Maintenance

Table of Contents

Introduction 2.2

Scheduled Maintenance Chart 2.3

Introduction

To maintain the motorcycle in a safe and reliable condition, the maintenance and adjustments outlined in this section must be carried out as specified in the schedule of daily checks, and also in line with the scheduled maintenance chart.

Weather, terrain and geographical location affects maintenance. The maintenance schedule should be adjusted to match the particular environment in which the vehicle is used and the demands of the individual owner. For advice on adjusting the service schedule, consult your authorised Triumph dealer.

Warning

In order to correctly carry out the maintenance items listed in the scheduled maintenance chart, special tools and specialist knowledge will be required. As only an authorised Triumph dealer will have this knowledge and equipment, Triumph strongly recommends that your authorised Triumph dealer carries out all scheduled maintenance.

A dangerous riding condition could result from incorrect maintenance leading to loss of motorcycle control and an accident.

Warning

All maintenance is vitally important and must not be neglected. Incorrect maintenance or adjustment may cause one or more parts of the motorcycle to malfunction. A malfunctioning motorcycle is dangerous and may lead to an accident.

Scheduled maintenance may be carried out by your dealer in three ways; annual maintenance, mileage based maintenance or a combination of both, depending on the mileage the motorcycle travels each year.

- Motorcycles travelling fewer than 10,000 miles per year must be maintained annually. In addition to this, mileage-based items require maintenance at their specified intervals, as the motorcycle reaches this mileage.
- Motorcycles travelling approximately 10,000 miles per year must have the annual maintenance and the specified mileage-based items carried out together.
- Motorcycles travelling more than 10,000 miles per year must have the mileage-based items maintained as the motorcycle reaches the specified mileage. In addition to this, annual based items will require maintenance at their specified annual intervals.

In all cases maintenance must be carried out at or before the specified maintenance intervals shown. Consult an authorised Triumph dealer for advice on which maintenance schedule is most suitable for your motorcycle.

Warning

Triumph Motorcycles cannot accept any responsibility for damage or injury resulting from incorrect maintenance or improper adjustment carried out by the owner.

Since incorrect or neglected maintenance can lead to a dangerous riding condition, always have an authorised Triumph dealer carry out the scheduled maintenance of this motorcycle.

Scheduled Maintenance Chart

Operation Description	Odometer Reading in Miles (Km) or time period, whichever comes first.							
		First Service	Annual Service	Mileage Based Service				
	Every	500 (800) 1 month	year	10,000 and 30,000 (16,000 and 48,000)	20,000 (32,000)	40,000 (64,000)	50,000 (80,000)	60,000 (96,000)
Engine - check for leaks	Day	•	•	•	•	•	•	•
Engine oil - renew	-	•	•	•	•	•	•	•
Engine oil filter - renew	-	•	•	•	•	•	•	•
Valve clearances - check	-			•			•	
Air cleaner - renew	-				•	•		•
Autoscan - carry out a full Autoscan using the Triumph diagnostic tool (print a customer copy)	-	•	•	•	•	•	•	•
ABS ECM - check for stored DTCs	-	•	•	•	•	•	•	•
Spark plugs - check	-			•	•	•	•	
Spark plugs - renew	Every 30,000 miles							
Throttle bodies - balance	-			•	•	•	•	•
Throttle cables - check/adjust	Day	•	•	•	•	•	•	•
Cooling system - check for leaks	-	•	•	•	•	•	•	•
Coolant level - check/adjust	-	•	•	•			•	
Coolant - renew	-				•	•		•
Fuel system - check for leaks	Day	•	•	•	•	•	•	•
Lights, instruments & electrical systems - check	Day	•	•	•	•	•	•	•
Fuel filter - renew	-				•	•		•
Steering - check for free operation	Day	•	•	•	•	•	•	•
Headstock bearings - check/adjust	-	•	•	•	•	•	•	•
Headstock bearings - lubricate	-				•	•		•
Forks - check for leaks/smooth operation	Day	•	•	•	•	•	•	•
Fork oil - renew	-					•		
Brake fluid levels - check	Day	•	•	•	•	•	•	•
Brake fluid - renew	Every 2 years							
Brake pad wear - check	Day	•	•	•	•	•	•	•
Brake calipers - check for leaks and seizures	-	•	•	•	•	•	•	•
Brake master cylinders - check for leaks	-	•	•	•	•	•	•	•
Final drive - check for oil leaks	Day	•	•	•	•	•	•	•
Final drive oil - check	-	•		•			•	
Final drive oil - renew	-				•	•		•
Fasteners - inspect visually for security	Day	•	•	•	•	•	•	•
Wheels - inspect for damage	Day	•	•	•	•	•	•	•

Operation Description	Odometer Reading in Miles (Km) or time period, whichever comes first.							
		First Service	Annual Service	Mileage Based Service				
	Every	500 (800) 1 month	year	10,000 and 30,000 (16,000 and 48,000)	20,000 (32,000)	40,000 (64,000)	50,000 (80,000)	60,000 (96,000)
Tyre wear/tyre damage - check	Day	•	•	•	•	•	•	•
Tyre pressures - check/adjust	Day	•	•	•	•	•	•	•
Clutch cable - check/adjust	Day	•	•	•	•	•	•	•
Side Stand - check operation	Day	•	•	•	•	•	•	•

3 Cylinder Head

Table of Contents

Exploded View - Camshaft Cover 3.2

Exploded View - Camshaft and Camshaft Drive 3.3

Exploded View - Cylinder Head 3.4

Description 3.5

Camshaft Cover 3.5

- Removal 3.5
- Installation 3.6

Camshaft Drive Chain Tensioner 3.7

- Removal 3.7
- Inspection 3.8
- Installation 3.8

Camshaft Drive Chain 3.10

- Removal 3.10
- Inspection 3.11
- Installation 3.12

Camshaft Drive Chain Blades 3.14

- Removal 3.14
- Installation 3.14

Camshafts 3.15

- Removal 3.15
- Camshaft identification 3.16
- Camshaft sprocket orientation 3.16
- Inspection 3.17
- Installation 3.18

Valve Clearances 3.20

Valve Clearance Adjustment 3.20

Cylinder Head 3.21

- Removal 3.21
- Inspection 3.22
- Installation 3.22

Valves and Valve Stem Seals 3.24

- Removal from the cylinder head 3.24
- Installation 3.24

Exploded View - Camshaft Cover

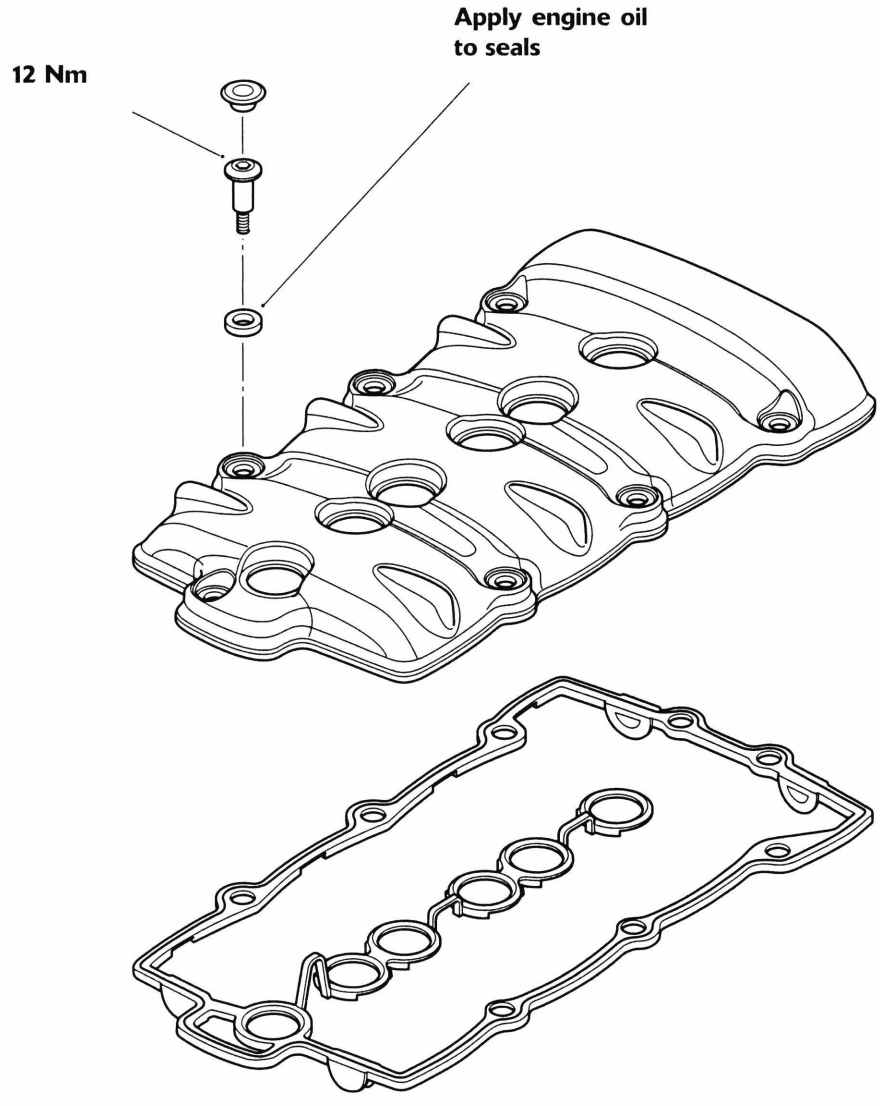

Exploded View - Camshaft and Camshaft Drive

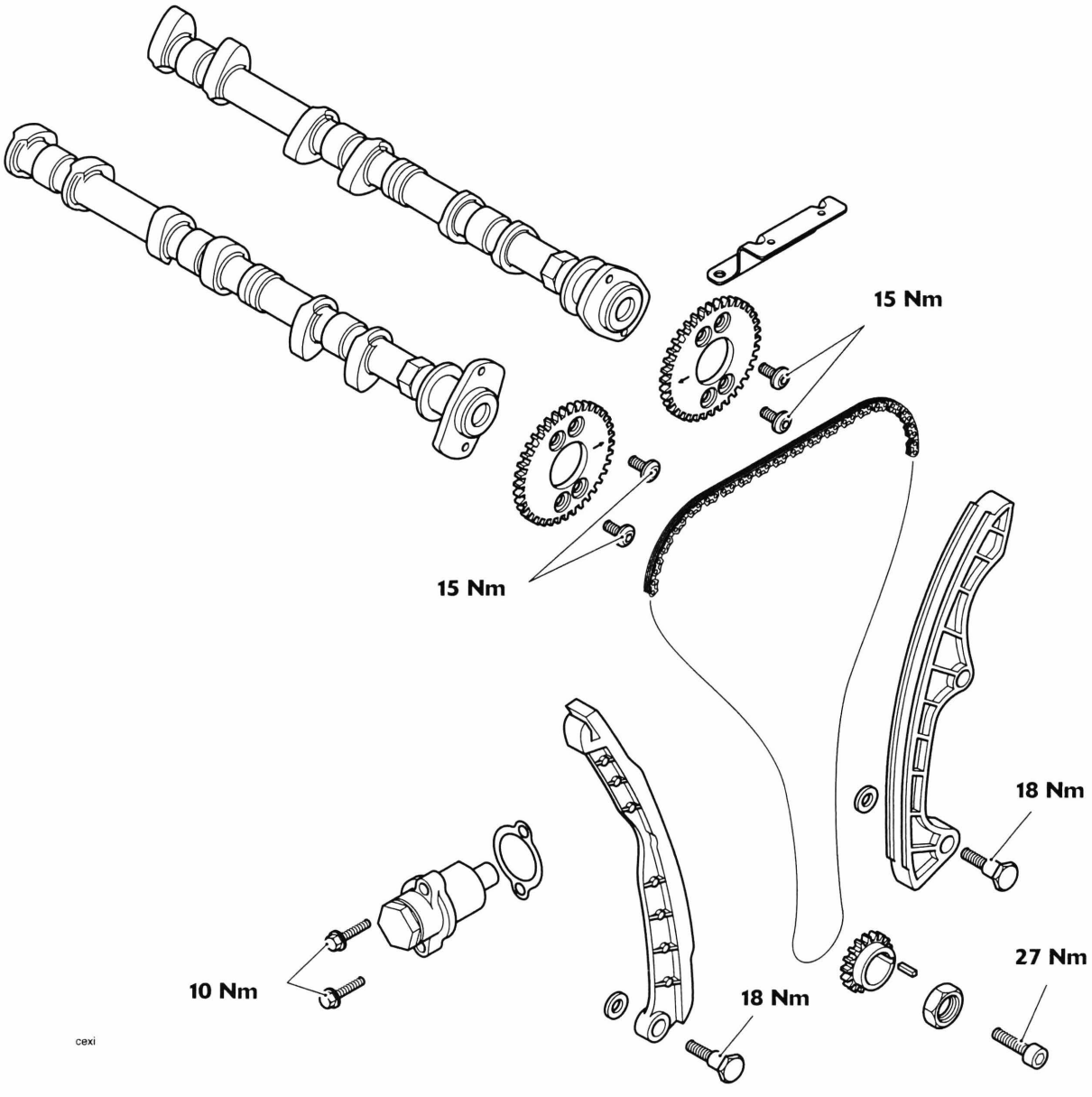

Exploded View - Cylinder Head

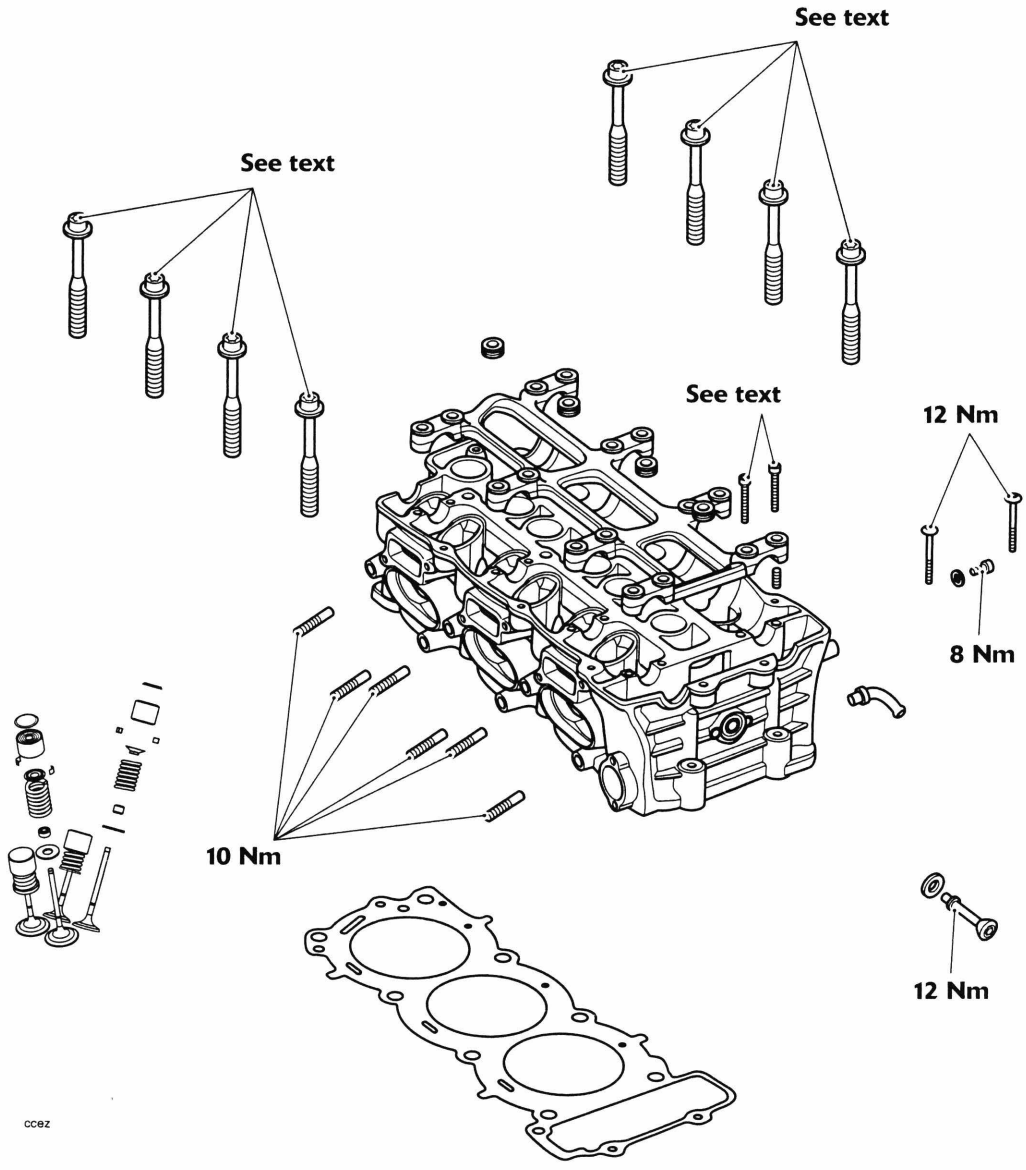

Description

The engine is fitted with an aluminium alloy cylinder head, which carries the camshafts, valves and spark plugs. The cylinder head is cast as a single entity, to which various components are permanently added after machining.

A silent-running camshaft drive chain drives the twin-overhead camshafts, which run directly in the cylinder head without additional bearings. The chain is tensioned by a spring-loaded device fitted to the cylinder head, and is guided by two Teflon-coated rubber-faced blades. Valve clearances are adjusted by changing variable thickness shims that sit between the camshaft and valve tappet bucket. The valves are fitted with single, symmetrical valve springs. Both the tip and seat face of the valves are hardened to give a long service life. Due to the assembly methods used, the valve seats and valve guides cannot be replaced.

Oil is supplied to the cylinder head by an internal passageway inside the engine. Once it arrives at the cylinder head, it is passed through a restrictor, and is then delivered to the camshaft bearing journals along grooves in the camshaft ladder. The camshaft lobes are splash fed by oil coming from the camshaft journals.

Camshaft Cover

⚠ Warning

Before starting work, ensure the motorcycle is stabilised and adequately supported. This will help prevent it from falling and causing injury to the operator or damage to the motorcycle.

Removal

1. Remove the seat (see page *17-18* for Rocket III and Classic see page *17-19* for Rocket III Touring).
2. Disconnect the battery, negative (black) lead first.
3. Remove the fuel tank (see page *11-123* for Rocket III and Classic, see page *11-126* for Rocket III Touring).
4. Remove the throttle bodies (see page *11-165*).
5. Remove the intake duct support bracket.

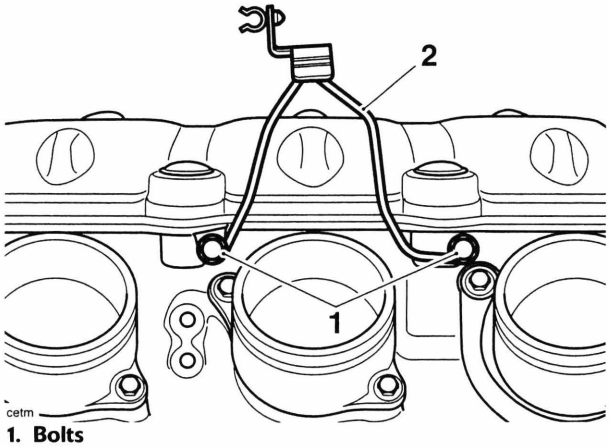

1. Bolts

2. Intake duct support bracket

6. Disconnect the spark plug leads from the spark plugs then remove the coil brackets with the coils attached.
7. Remove the bungs from the heads of the camshaft cover fixings.

8. Release the bolts securing the camshaft cover to the head in the sequence shown below.

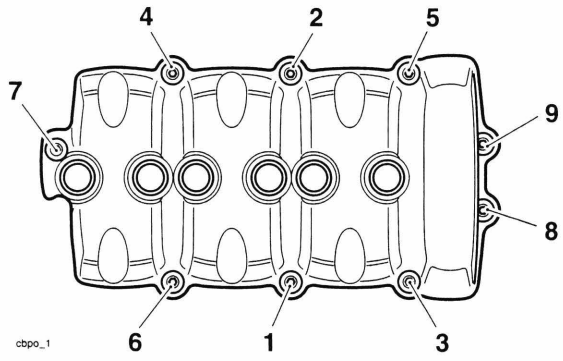

Camshaft cover removal sequence

9. Remove all the bolts and bolt-seals from the camshaft cover and discard the bolt seals.
10. Raise the cover and manoeuvre it towards the right hand side of the engine, where it can be removed.

⚠ Caution

Never use a lever to remove the camshaft cover from the cylinder head. Using a lever will cause damage to the cylinder head and camshaft cover, which could lead to an oil leak.

11. Collect and discard the spark plug tower seals from the head.

Installation

1. Fit the new camshaft cover seal to the camshaft cover.
2. Apply a 2 mm bead of silicone sealant to the cylinder head where the four 'D' sections of the camshaft cover seals fit.

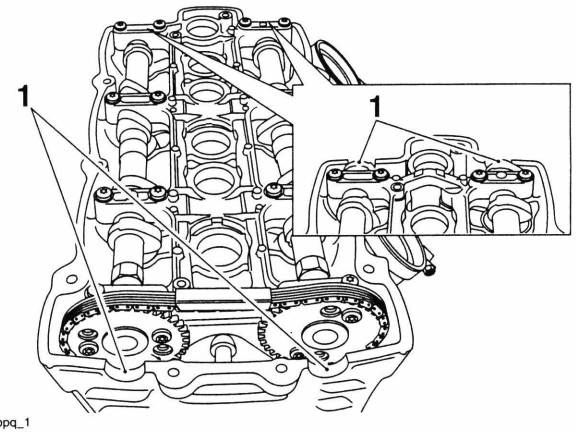

1. 'D' sections

3. Fit the new seal ensuring the four 'D' sections seat in the corresponding half-rounds in the cylinder head. Position the new spark plug tower seals to the six plug towers.
4. Fit the camshaft cover to the cylinder head. Ensure that the seal remains in position, paying particular attention to the six spark plug tower areas.
5. Lubricate the new camshaft cover screw seals with clean engine oil.
6. Fit the camshaft cover bolts, complete with their new seals (steel ring side facing upwards) and tighten to finger tight.

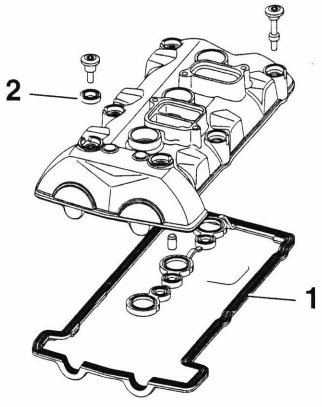

1. Camshaft cover seal
2. Bolt seal

7. Progressively and evenly tighten the camshaft cover bolts to **12 Nm** in the sequence shown below.

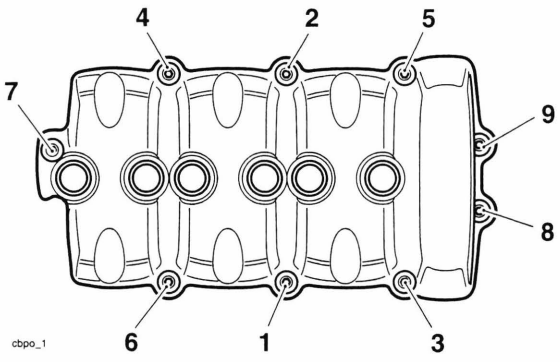

Camshaft Cover Bolts Tightening Sequence

8. Refit the coil bracket and coils.
9. Re-attach the plug leads to the plugs.
10. Refit the intake duct support bracket, tightening its bolts to **9 Nm**.
11. Refit the throttle bodies (see page *11-167*).
12. Refit the fuel tank (see page *11-124* for Rocket III and Classic, see page *11-127* for Rocket III Touring).
13. Reconnect the battery, positive (red) lead first.
14. Refit the seat (see page *17-18* for Rocket III and Classic, see page *17-19* for Rocket III Touring).

Camshaft Drive Chain Tensioner

Warning

Before starting work, ensure the motorcycle is stabilised and adequately supported. This will help prevent it from falling and causing injury to the operator or damage to the motorcycle.

Removal

1. Remove the camshaft cover (see page *3-5*).
2. Remove the inspection plug from the clutch cover.

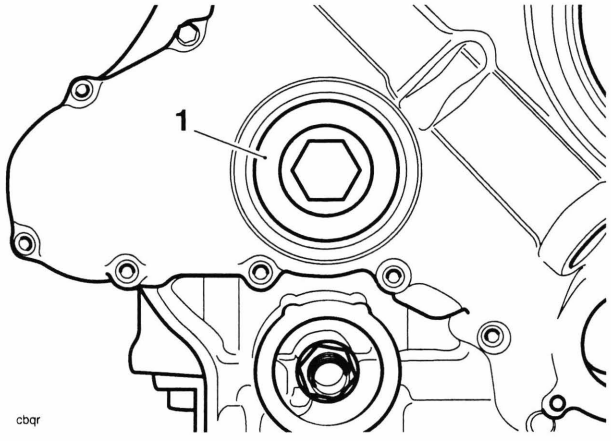

1. Inspection plug

3. Turn the engine until the maximum numbers of camshaft lobes are facing away from the valves. This will prevent the camshafts from springing around when the camshaft drive chain tensioner is removed.

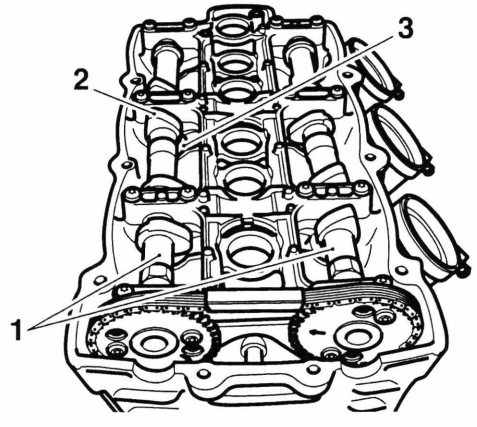

1. Camshafts
2. Lobes
3. Valves

4. Remove the centre nut and washer from the camshaft drive chain tensioner.

Warning

The centre nut of the camshaft drive chain tensioner is under spring tension. Always wear hand, eye and facial protection when releasing the centre nut as unprotected areas of the body can be injured if the spring tension is released in an unexpected or uncontrolled way.

5. Withdraw the spring and nut from the tensioner body.

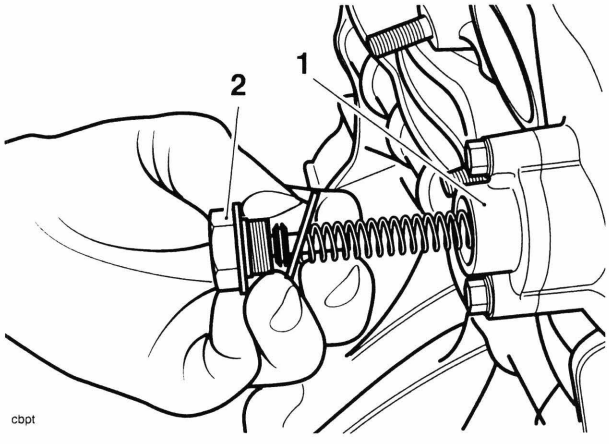

1. Camshaft drive chain tensioner
2. Centre nut

6. Remove the camshaft drive chain tensioner body from the head.

Inspection

1. Inspect the tensioner spring for damage and deformation. Renew as necessary.
2. Inspect the tip of the tensioner plunger for wear and damage. Renew as necessary.

Installation

1. Fit a new gasket to the tensioner body.

Note:

- **If fitting a new tensioner, observe the following:**
- **Remove the new tensioner from the packaging. On examination, it can be seen that the tensioner nut will not be tightened fully into the tensioner body and that the tensioner 'nose' (i.e., the part which actually contacts the chain rubbing strip) is fully retracted into the housing.**
- **Prior to assembly into the engine it is necessary to disassemble the tensioner nut, washer and spring. To do this without damaging the internal components, turn the tensioner nut at least a half turn clockwise (i.e. tighten it further into the housing) until the plunger springs outwards. The tensioner nut can then be withdrawn without causing internal damage to the tensioner components.**

2. Set the tensioner plunger onto the first tooth of the ratchet by manually lifting the tensioner pawl and pushing the plunger into the tensioner body.

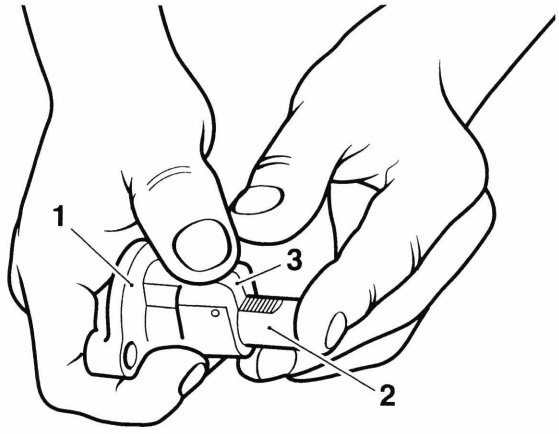

1. Tensioner
2. Tensioner plunger
3. Pawl

3. Look into the inspection hole. Rotate the crankshaft clockwise (as viewed from the front), until No. 1 cylinder is at TDC. No. 1 cylinder is at TDC when a 'dot' mark on the crank primary gear is in alignment with the line in the upper crankcase.

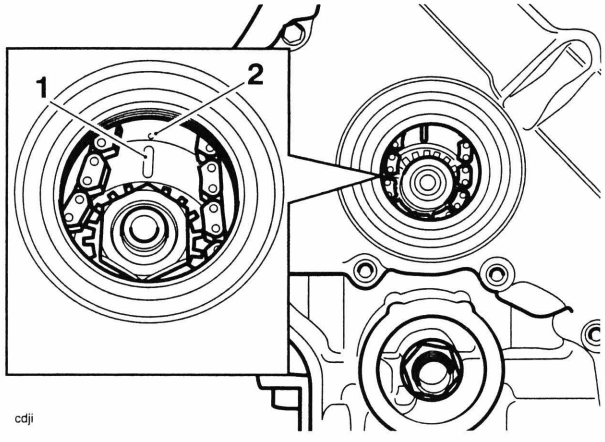

1. Upper crankcase line
2. Crankshaft primary gear 'dot' mark

In addition, timing marks on the camshaft sprockets should point downwards at a point level with the cylinder head. If they do not align as shown, turn the camshafts until they do align.

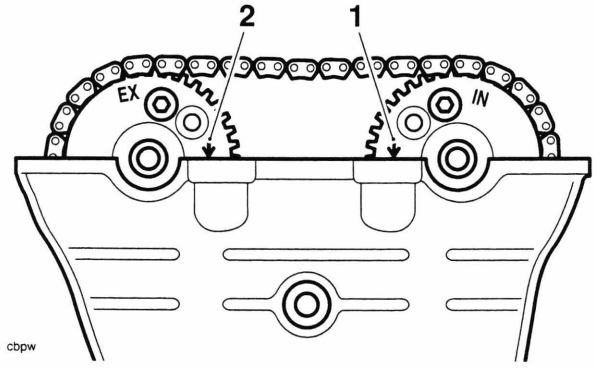

1. Inlet camshaft timing marks
2. Exhaust camshaft timing marks

4. Fit the dowels of tool T3880202 to location holes in the camshaft sprockets, as shown in the diagram below. This will hold the camshafts in the correct timing position and prevent them from turning while the chain tensioner is fitted.

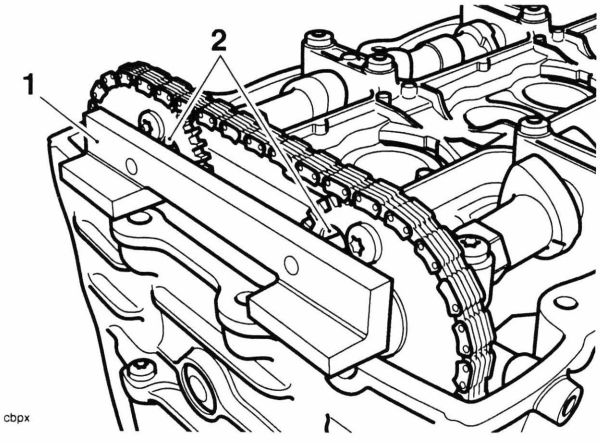

1. Tool T3880202
2. Camshaft sprocket holes

5. Fit the tensioner to the crankcase (ratchet teeth facing upwards) ensuring the gasket is not damaged during the process.
6. Fit and tighten the tensioner fixings to **9 Nm**.
7. Push the tensioner plunger into contact with the chain guide using finger pressure.

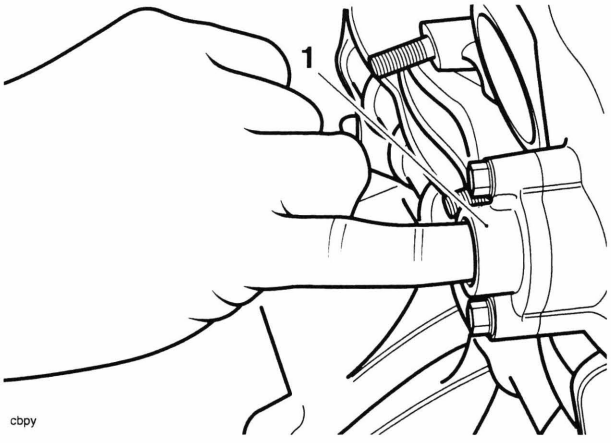

1. Tensioner

8. Measure the tensioner blade position using tool T3880068. If NO clearance is evident between the tool and the tensioner body, install the spacer (part number 1140188) into the tensioner body before installing the spring and centre nut.
   If ANY clearance is evident between the tool and the tensioner body, DO NOT install the spacer.

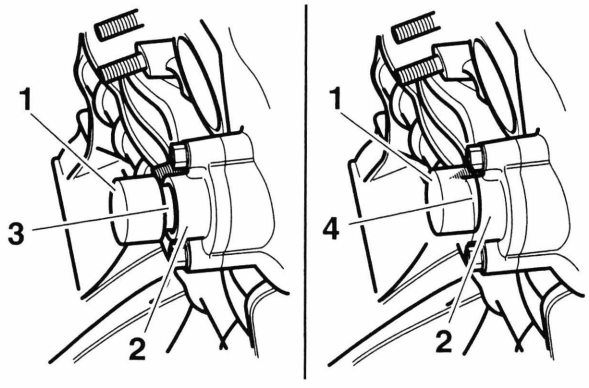

1. Tool T3880068
2. Tensioner body
3. Gap
4. No gap

9. Fit a new washer to the tensioner's centre nut.
10. Fit the spring to the tensioner body. Fit the centre nut and tighten to **23 Nm**.

⚠ Warning

The centre nut of the camshaft drive chain tensioner is under spring tension. Always wear hand, eye and facial protection when releasing the centre nut as unprotected areas of the body can be injured if the spring tension is released in an unexpected or uncontrolled way.

11. Remove tool T3880202 and turn the crankshaft clockwise (as viewed from the front of the engine) through four complete revolutions. Stop when the timing mark on the crankshaft primary gear realigns with the line in the upper crankcase.

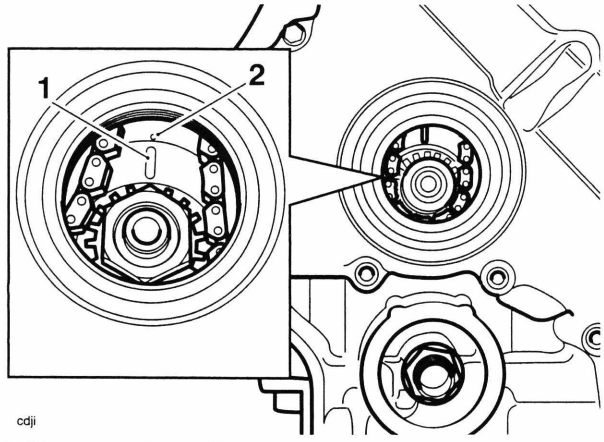

1. Upper crankcase line
2. Crankshaft primary gear 'dot' mark

12. Check that the camshaft marks align as described previously. Rectify as necessary.
13. When the timing checks have been satisfactorily completed, refit the inspection plug tightening it to **18 Nm**.
14. Refit the camshaft cover (see page *3-6*).

Camshaft Drive Chain

Removal

⚠ Warning

Before starting work, ensure the motorcycle is stabilised and adequately supported. This will help prevent it from falling and causing injury to the operator or damage to the motorcycle.

1. Remove the camshaft cover (see page *3-5*).
2. Remove the clutch cover (see page *4-7*).
3. Remove the camshaft drive chain top pad.

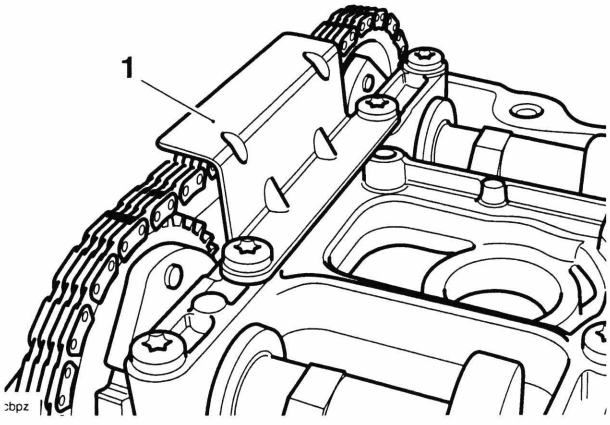

1. Top pad

⚠ Caution

Never use a dot punch or centre punch to mark the camshaft drive chain, camshafts or camshafts driven gears. Severe engine damage will result if impact is applied to machined parts.

4. Using a suitable marker pen, make a permanent mark on one of the outer plates of the camshaft drive chain as indicated in the diagram below.

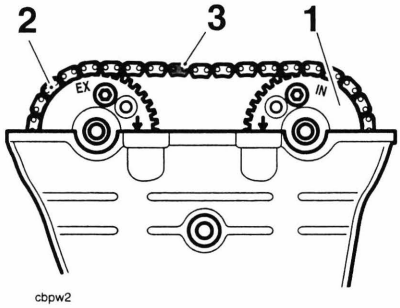

cbpw2

1. Camshaft driven gears
2. Camshaft drive chain
3. Permanent mark

5. Align the timing marks on the crankshaft and camshafts.

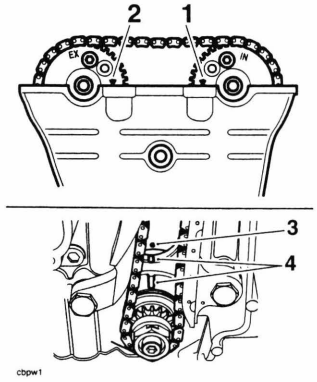

cbpw1

1. Inlet camshaft timing marks
2. Exhaust camshaft timing marks
3. Crankshaft primary gear 'dot' mark
4. Upper crankcase line

6. Remove the camshaft drive chain tensioner (see page *3-7*).
7. Remove the sound suppression bolt from the camshaft drive chain chest.

Warning

Care must be taken when detaching the camshaft drive chain from the crankshaft and camshafts. The camshafts may suddenly rotate due to valve spring pressure.

8. Detach the camshaft drive chain from the crankshaft and the camshafts.
9. Taking note of the camshaft drive chain orientation, remove the camshaft drive chain.

Inspection

An in-situ check can be made as follows:

1. Check for significant blue discolouration of the chain plates indicating excessive heat build-up.
2. Examine all pins for signs of rotation.
3. Check for cracking or deep scratching of the chain plates.
4. Check for severe wear of the inner plates as indicated in the diagram below.

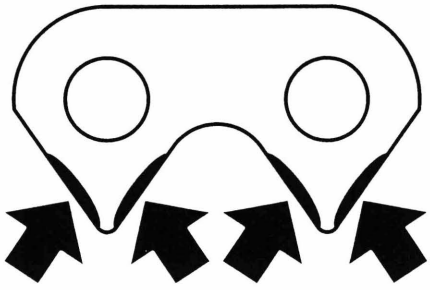

cbqo

For a more thorough check, proceed as follows:

1. Remove the chain from the engine.
2. Suspend the chain from a pin or hook with a 13 kg weight attached at the lower end.



cbqp

3. Measure across 23 links as shown in the diagram. If the chain is within limits, the measurement should be no longer than 149.48 mm. Measurements beyond 149.48 mm indicate that the chain must be replaced.

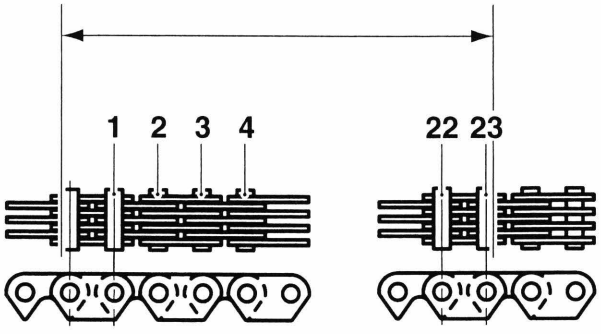

cbqq

4. Check for severe wear of the inner surface of the outer plates at the side-contact points with the sprocket teeth.

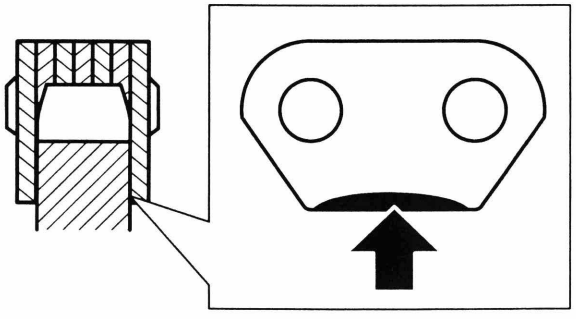

cbqr

5. Check for signs of stiffness or kinking.

6. Check for severe wear of the plates in the area shown below.

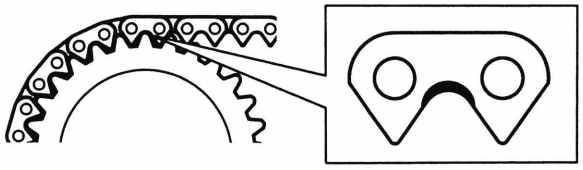

cbqv

If any of these symptoms are evident, the camshaft drive chain must be replaced.

Installation

1. Check the crankshaft alignment marks.
2. Feed the chain down between the two blades and attach to the crankshaft in the orientation noted on removal.

Warning

Care must be taken when attaching the camshaft drive chain to the camshafts. The camshafts may suddenly rotate due to valve spring pressure.

3. Attach the camshaft drive chain to the camshafts ensuring that the alignment marks are aligned with the cylinder head.

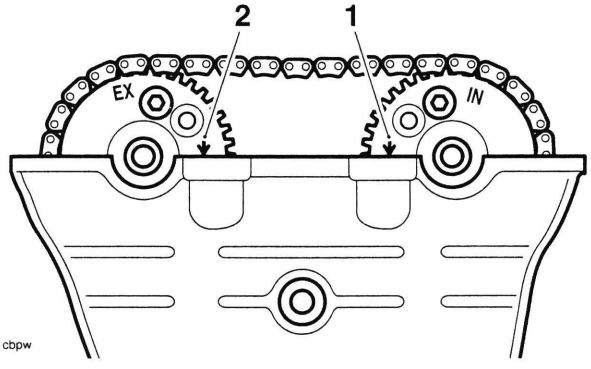

cbpw

1. Inlet camshaft timing marks
2. Exhaust camshaft timing marks

4. Check the crankshaft and camshaft alignment marks are still in alignment and that the chain slack is towards the camshaft drive chain tensioner side.

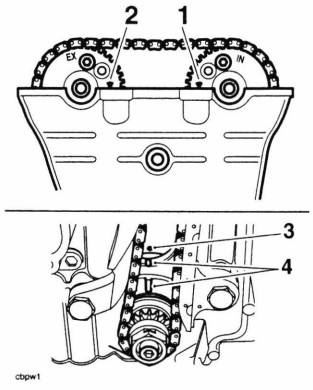

1. Inlet camshaft timing marks
2. Exhaust camshaft timing marks
3. Crankshaft primary gear 'dot' mark
4. Upper crankcase line

5. Fit the dowels of tool T3880202 to location holes in the camshaft sprockets, as shown in the diagram below. This will hold the camshafts in the correct timing position and prevent them from turning while the chain tensioner is fitted.

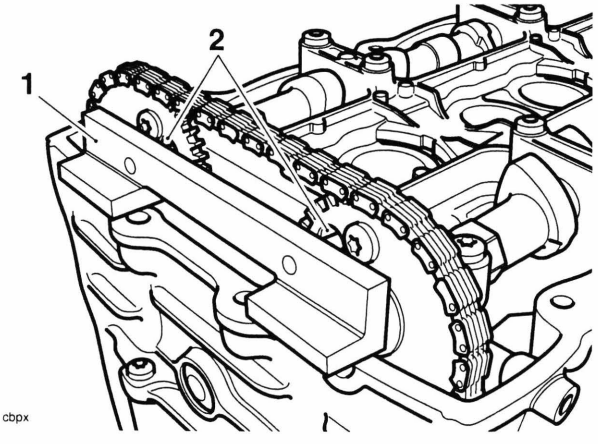

1. Tool T3880202
2. Camshaft sprocket holes

6. Refit the camshaft drive chain tensioner (see page *3-8*).

7. Remove tool T3880202 and turn the crankshaft clockwise (as viewed from the front of the engine) through four complete revolutions. Stop when the timing mark on the crankshaft primary gear realigns with the line in the upper crankcase.

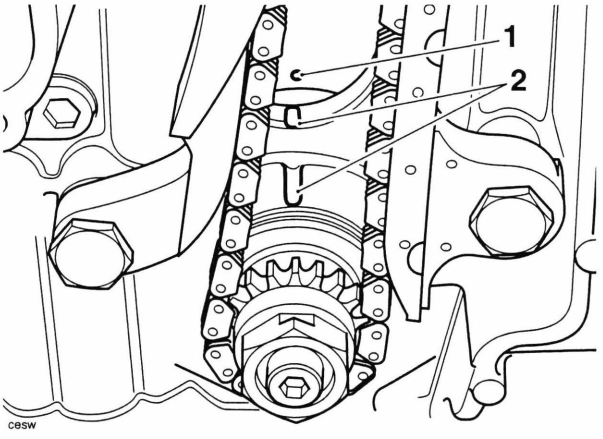

1. Crankshaft primary gear 'dot' mark
2. Upper crankcase line

8. Check that the camshaft marks align as described previously. Rectify as necessary.
9. Refit the top pad and tighten the screws to **10 Nm**.

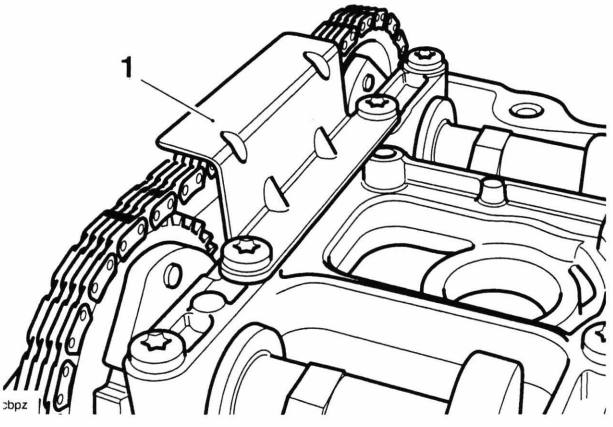

1. Top pad

10. Refit the clutch cover (see page *4-7*).
11. Refit the camshaft cover (see page *3-6*).

Camshaft Drive Chain Blades

Removal

Warning

Before starting work, ensure the motorcycle is stabilised and adequately supported. This will help prevent it from falling and causing injury to the operator or damage to the motorcycle.

1. Remove the camshaft drive chain (see page *3-10*).
2. Remove the cylinder head (see page *3-21*).

Note:

- **Note the position of the camshaft drive chain blade bolt washer for installation.**

3. Remove the camshaft drive chain tensioner blade.

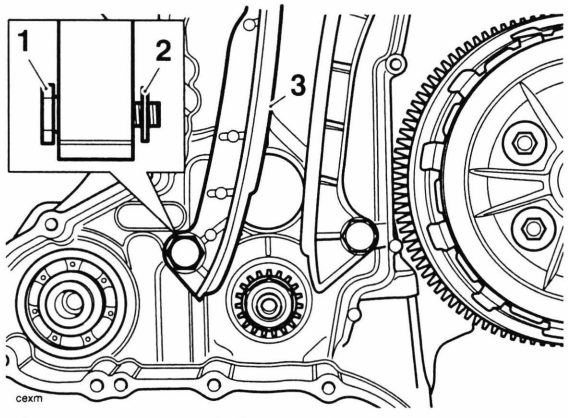

1. Camshaft drive chain blade bolt
2. Washer
3. Camshaft drive chain tensioner blade

4. Remove the camshaft drive chain rubbing blade bolt and washer.

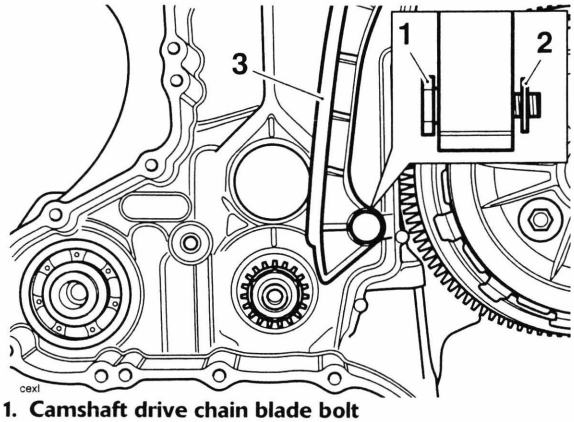

1. Camshaft drive chain blade bolt
2. Washer
3. Camshaft drive chain rubbing blade

Note:

- **Note the position of the camshaft drive chain rubbing blade upper mounting for installation.**

5. Move the camshaft drive chain rubbing blade upwards to detach the upper mounting then slightly rotate the blade clockwise and remove the blade.

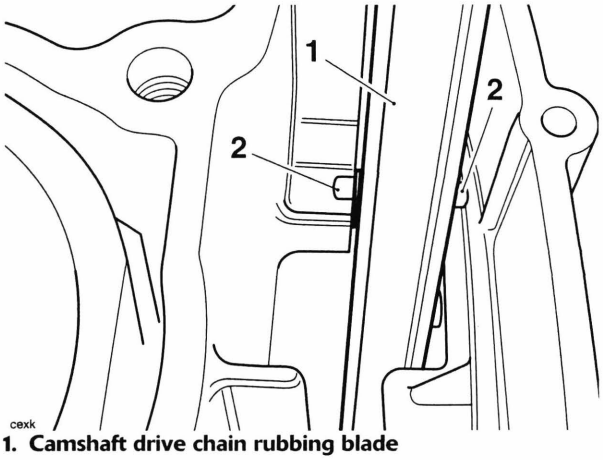

1. Camshaft drive chain rubbing blade
2. Upper mountings

Installation

1. Refit the camshaft drive chain rubbing blade. Ensure the upper mounting is correctly located on the upper crankcase as noted from the removal.
2. Refit the camshaft drive chain rubbing blade bolt and washer as noted from the removal, and tighten to **18 Nm**.
3. Refit the camshaft drive chain tensioner blade.
4. Refit the camshaft drive chain tensioner blade bolt and washer as noted from the removal, and tighten to **18 Nm**.
5. Refit the cylinder head (see page *3-22*).
6. Refit the camshaft drive chain (see page *3-12*).

Camshafts

Removal

Warning

Before starting work, ensure the motorcycle is stabilised and adequately supported. This will help prevent it from falling and causing injury to the operator or damage to the motorcycle.

Note:

- **Either camshaft can be removed from the cylinder head without complete removal of the camshaft drive chain. However, the camshaft drive chain must first be detached from the camshafts.**

1. Remove the camshaft cover (see page *3-5*).

Note:

- **Turn the engine until the maximum number of camshaft lobes are facing away from the valves. This will prevent the camshafts from springing around when the camshaft drive chain tensioner is removed.**

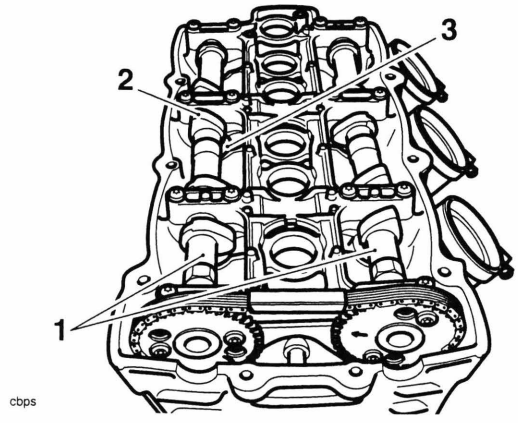

cbps

1. Camshafts
2. Lobes
3. Valves

2. Remove the camshaft drive chain tensioner (see page *3-7*).

3. Remove the camshaft drive chain top pad.

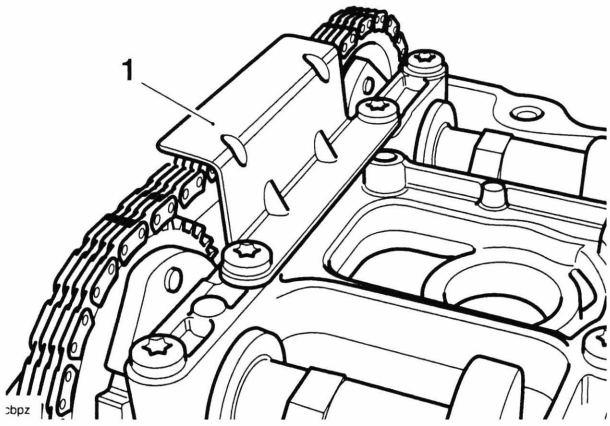

cbpz

1. Top pad

Caution

To avoid damage to the camshaft ladder, always ensure as many camshaft lobes as possible are facing away from the valves. This will reduce stress on the camshaft ladder during removal. Damage to the camshaft ladder will result in replacement of the complete head.

4. Progressively and evenly release the remaining camshaft ladder fixings, half a turn each, until the upward pressure on the bolt heads has been released. Always start from the centre of the engine.

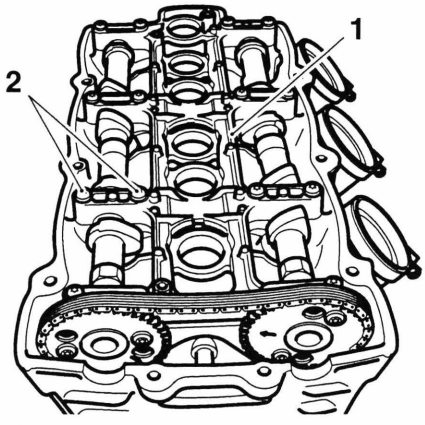

cbqa

1. Camshaft ladder
2. Camshaft ladder fixings (2 of 16)

Caution

Failure to release the camshaft ladder fixings progressively and evenly may result in damage to the camshaft ladder, the camshafts or the cylinder head itself. A damaged camshaft ladder cannot be replaced as an individual item. It can only be obtained as part of a new cylinder head.

5. Once all the upward force on the camshaft ladder has been progressively released, collect all the bolts and remove the ladder.
6. Secure the camshaft drive chain to prevent it from falling into the front of the engine.

Note:

- **The sound suppression bolt will prevent the camshaft drive chain from falling completely away from the head.**

7. Lift the camshaft drive chain from one of the camshafts to allow removal of the shaft from the cylinder head.

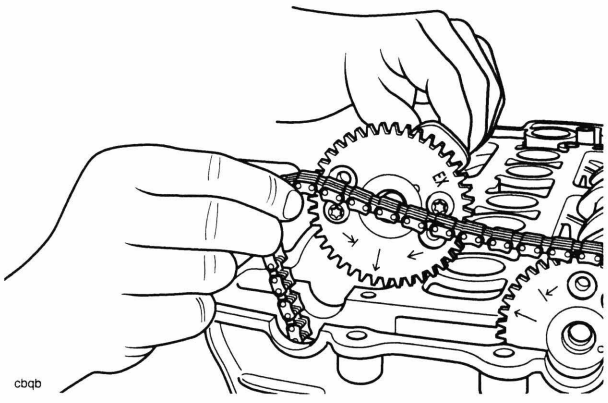

Removing a Camshaft

8. Repeat for the second camshaft.

Camshaft identification

The inlet camshaft can be identified by a groove on a machined surface in its centre. The same surface on the exhaust camshaft is plain.

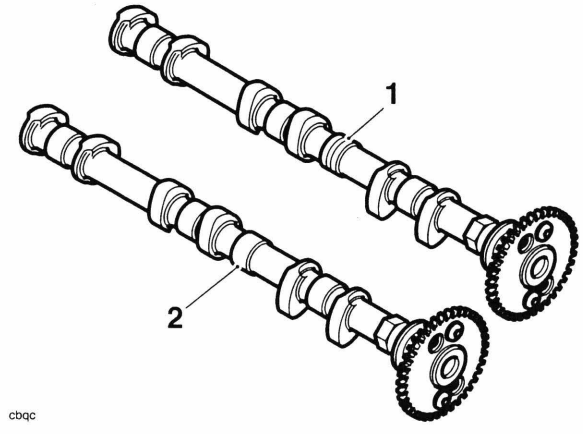

1. **Inlet camshaft (grooved)**
2. **Exhaust camshaft (plain)**

Camshaft sprocket orientation

The same drive sprocket is used for both inlet and exhaust camshafts.

To attach the sprocket in the correct relationship to the camshafts, two pairs of offset bolt holes are used, with inlet and exhaust bolt holes being clearly marked ('IN' for inlet and 'EX' for exhaust). The holes will also prevent the sprockets from being fitted 180° out of alignment.

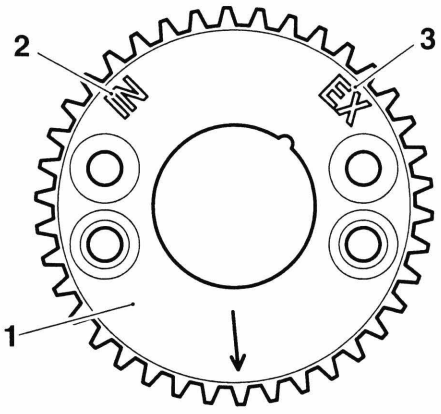

1. **Sprocket**
2. **'IN' marking**
3. **'EX' marking**

To fit a sprocket to an inlet camshaft, position the sprocket to the camshaft and align the hole marked 'IN' with one of the threaded holes in the camshaft. If both bolt-holes in the camshaft line up correctly with the holes in the sprocket, the sprocket is in the correct place. If the holes do not line up, then the sprocket should be rotated by a half-turn.

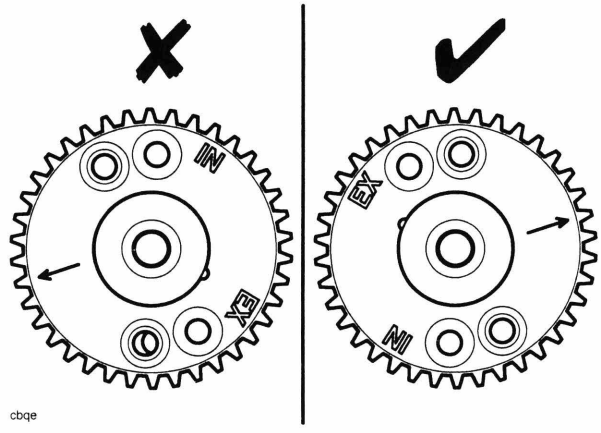

Inspection

1. Inspect the sprockets for damage and worn or broken teeth.
2. Inspect the bearing surfaces in the cylinder head and camshaft ladder. If wear or damage is found, the cylinder head must be replaced.
3. Inspect the camshaft drive chain (see page *3-11*).
4. Check camshaft journal to camshaft ladder clearance using Plastigauge (Triumph part number 3880150-T0301) as follows:

⚠ Caution

During the following procedure, the engine must not be rotated. Damage to valves, pistons and the cylinder head can result from rotating the engine.

a) Position a camshaft to the cylinder head in its correct location, (inlet camshaft to inlet valves, exhaust camshaft to exhaust valves). Ensure that the timing marks on the camshaft sprocket are positioned as for removal.

b) Release and remove the camshaft ladder as previously described. Wipe the exposed areas of one of the camshaft journals and the corresponding position on the camshaft ladder.

c) Apply a thin smear of grease to the wiped camshaft journal and a small quantity of silicone release agent to the corresponding position on the camshaft ladder.

d) Size a piece of Plastigauge to fit across the wiped camshaft journal.

e) Fit the Plastigauge to the camshaft journal using the grease to hold it in place.

f) Position the camshaft ladder to the cylinder head, aligning bearing areas with camshaft journals. At this stage, it is not necessary to fit the camshaft drive chain top pad.

g) Finger-tighten the camshaft ladder bolts until the under-head areas are in contact with the camshaft ladder.

h) In the sequence shown below evenly and progressively tighten the camshaft ladder bolts, approximately half a turn each, until the camshaft ladder is in full contact with the head.

i) In the same sequence, torque each camshaft ladder bolt to **5 Nm**.

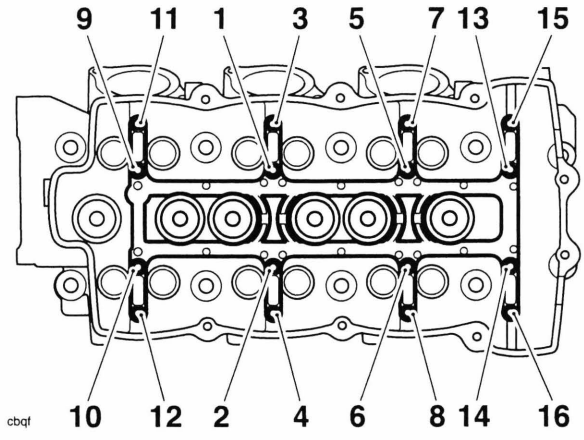

Camshaft Ladder Tightening Sequence

j) In the same sequence, torque each camshaft ladder bolt to **10 Nm**.

k) Release and remove the camshaft ladder as previously described.

l) Utilising the gauge provided with the Plastigauge kit, measure the width of the now compressed Plastigauge.

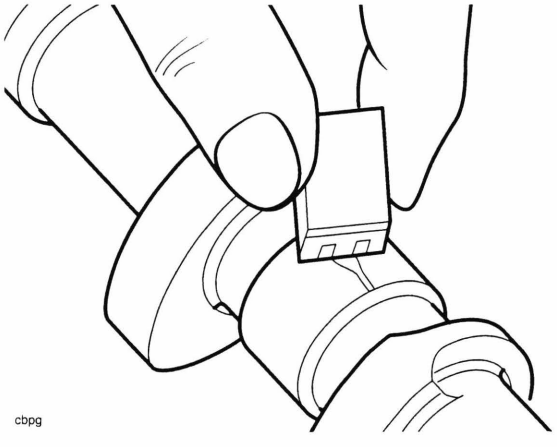

Taking a Plastigauge Measurement

5. Calculate the camshaft journal clearance using the chart provided with the Plastigauge kit.

6. If the journal to camshaft ladder clearance is within the specified tolerances (see table below), remove the camshaft ladder and clean off all traces of Plastigauge, silicone release agent and grease.

Standard	0.040 - 0.091 mm
Service limit	0.13 mm

7. Check the diameter of the camshaft journals.

Standard	22.93 - 22.96 mm

8. If any of the journal to camshaft ladder clearances are outside the specified tolerances, but the camshaft journals are within their specified tolerances, the cylinder head must be replaced.

Installation

1. Correctly identify the inlet and exhaust camshafts as previously described (see page *3-16*).
2. Position the camshafts to the two banks of valves ensuring that the inlet camshaft is located to the inlet valves and the exhaust camshaft to the exhaust valves.
3. Turn the engine over so that all three pistons are away from TDC (approximately 15° ATDC).

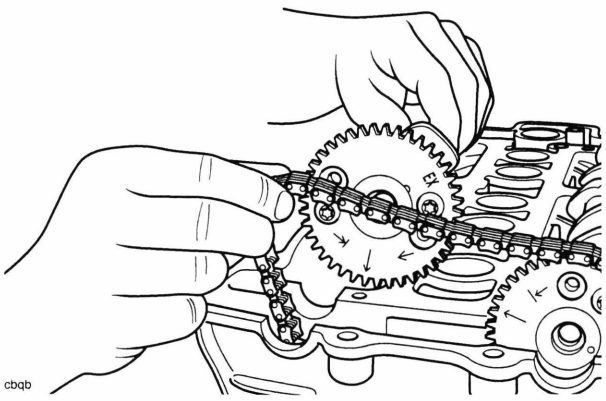

Camshaft Installation

4. Working on one camshaft at a time, locate the camshaft drive chain over the camshaft sprockets.
5. Ease the camshaft drive chain away from the sprockets then turn each camshaft until as many lobes as possible are facing away from the valves. Allow the chain to drop back onto the camshafts.

⚠ Caution

To avoid damage to the camshaft ladder, always ensure as many camshaft lobes as possible are facing away from the valves. This will reduce stress on the camshaft ladder during assembly. Damage to the camshaft ladder will result in replacement of the complete head.

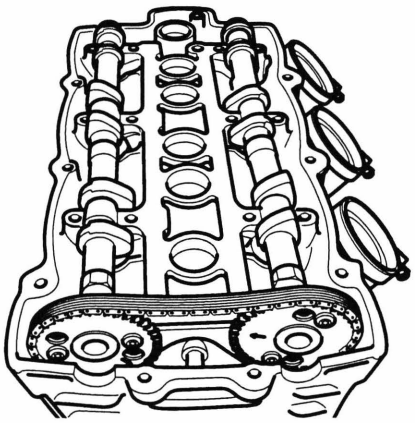

Located Camshafts

6. Lubricate the camshaft bearing areas of the camshaft ladder with a 50/50 solution of engine oil and molybdenum disulphide grease.

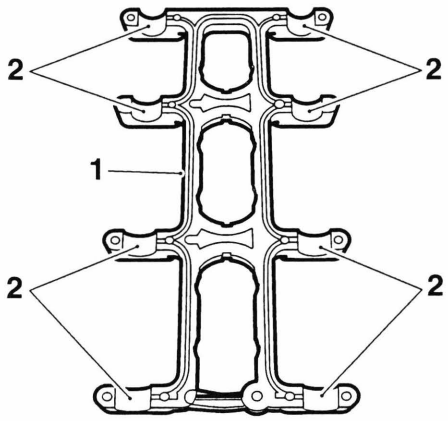

1. Camshaft ladder
2. Camshaft bearing areas

7. Lubricate the threads of the camshaft ladder bolts with clean engine oil.
8. Position the camshaft ladder to the cylinder head, aligning bearing areas with camshaft journals.
9. Finger-tighten the camshaft ladder bolts until the bolt's under-head areas are in contact with the camshaft ladder.

10. In the sequence shown below evenly and progressively tighten the camshaft ladder bolts, approximately half a turn each, until the camshaft ladder is in full contact with the head.

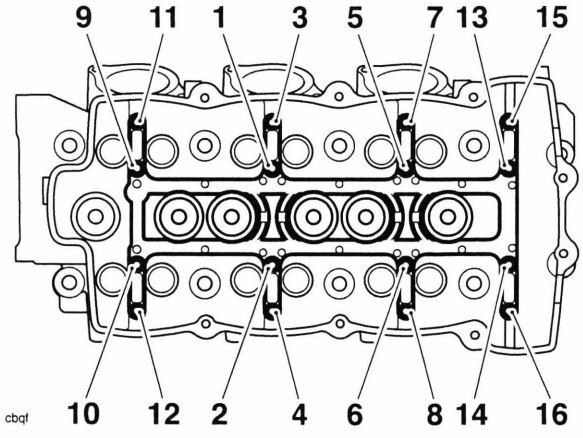

Camshaft Ladder Tightening Sequence

11. In the same sequence, torque each camshaft ladder bolt to **5 Nm**.
12. In the same sequence, torque each camshaft ladder bolt to **10 Nm**.
13. Fit the camshaft drive chain top pad. Tighten the top pad fixings to **10 Nm**.
14. Ease the camshaft drive chain away from the camshafts. Rotate the crankshaft clockwise (as viewed from the front), until No. 1 cylinder is at TDC. No. 1 cylinder is at TDC when a 'dot' mark on the crank primary gear is in alignment with the line in the upper crankcase.

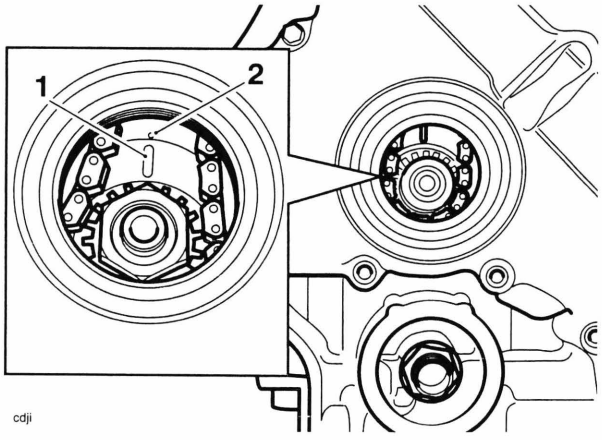

1. Upper crankcase line
2. Crankshaft primary gear 'dot' mark

Note:

- **After placing each camshaft in the timing position, it will be necessary to have an assistant hold the camshafts in position until tool T3880202 is fitted.**

- **Set the exhaust camshaft first, then the inlet.**

15. Ease the camshaft drive chain away from the sprockets and position the camshafts so that the timing marks align as shown below. Allow the camshaft drive chain to drop back onto each sprocket after positioning each camshaft.

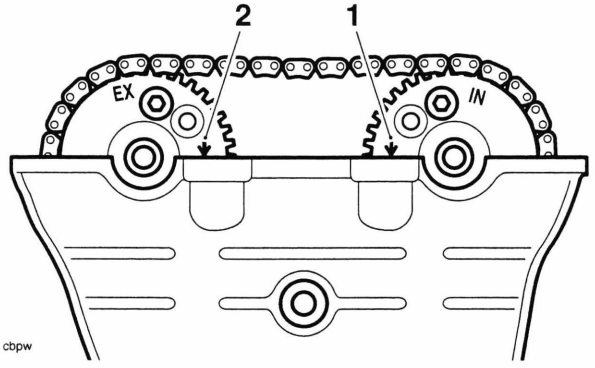

1. Inlet timing mark
2. Exhaust timing mark

16. Fit tool T3880202 to location holes in the camshaft sprockets as shown in the diagram below. This will hold the camshafts in the correct timing position and prevent them from turning while the chain tensioner is fitted.

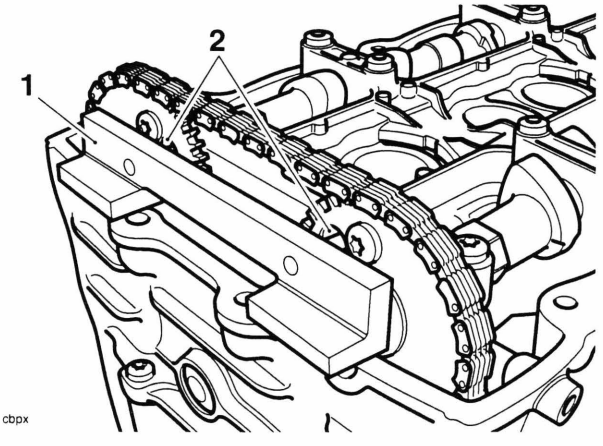

1. Tool T3880202
2. Camshaft sprocket holes

17. Refit and assemble the camshaft drive chain tensioner plunger, spring and centre nut (see page *3-8*).
18. Remove tool T3880202.
19. Turn the engine over at least four times, then check the camshaft timing again. Reset as necessary.
20. Check all valve clearances (see page *3-20*). Adjust as necessary to give the correct clearances.
21. Refit the camshaft cover (see page *3-6*).

Valve Clearances

Camshaft, valve, valve shim and valve seat wear affect the valve clearances. The effect of this wear is to change the clearance between the camshaft and the adjustment shim, causing engine noise and/or improper running. If the valve clearances are incorrect, permanent damage to components in the valve-train will take place and engine performance will be affected.

Correct valve clearances are in the range given in the table below.

Inlet	0.10 to 0.15 mm
Exhaust	0.15 to 0.20 mm

Note:

- **Valve clearance adjustment must be carried out with the engine cold.**

1. Remove the camshaft cover (see page *3-5*).
2. Remove a spark plug from each cylinder to reduce compression resistance when turning the engine.
3. Select a high gear and, using the rear wheel, turn the engine over until a pair of camshaft lobes are positioned pointing directly away from the valves.
4. Using feeler gauges, measure and record the clearances for this pair of valves only.
5. Repeat the process until the clearances for all valves have been checked.

   If any of the recorded clearances fall outside the specified range, adjustments must be made. If all measured clearances are within tolerance, refit the camshaft cover (see page *3-6*).

Valve Clearance Adjustment

Note:

- **Valve clearance checking and adjustment must be carried out with the engine cold.**

1. Measure and record all valve clearances as described previously.
2. Remove the camshafts (see page *3-15*).
3. Remove a shim from one of the valves whose clearance required adjustment.
4. Measure the original shim, using a micrometer.
5. Calculate the shim thickness required to give the correct clearance. Clearance too small; fit a thinner shim. Clearance too large; fit a thicker shim.

Note:

- **Shims are available ranging from 2.00 mm to 3.20 mm in increments of 0.025 mm.**

6. Fit the selected shim to the tappet bucket.
7. Repeat the procedure until all valves requiring adjustment have been correctly set.
8. Refit the camshafts (see page *3-18*).
9. Rotate the engine several times to fully seat the shims.
10. Repeat the clearance checks on all valves, adjust as necessary.
11. Refit the camshaft cover (see page *3-6*).

Cylinder Head

Removal

Warning

Before starting work, ensure the motorcycle is stabilised and adequately supported. This will help prevent it from falling and causing injury to the operator or damage to the motorcycle.

1. Remove the fuel tank (see page *11-123* for Rocket III, Classic and Roadster, see page *11-126* for Rocket III Touring).
2. Remove the radiator (see page *12-13*).
3. Remove the exhaust header system (see page *11-179* for Rocket III and Classic, see page *11-182* for Rocket III Touring and Roadster).
4. Remove the throttle bodies (see page *11-165*).
5. Remove the oil tank (see page *9-16*).
6. Remove the camshafts (see page *3-15*).
7. Disconnect the coolant temperature sensor and low oil pressure switch connections.

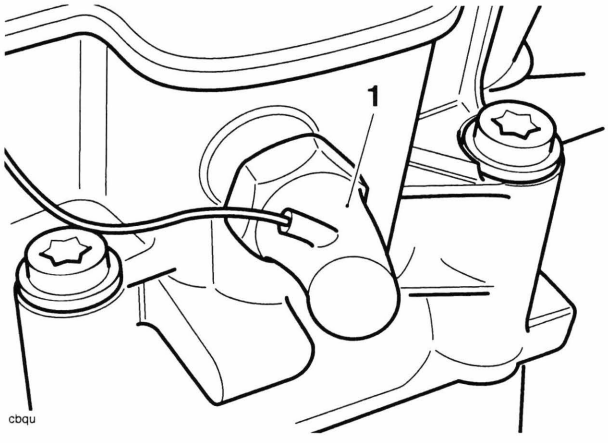

1. Low oil pressure warning light switch

8. Remove both engine in-fill panels.

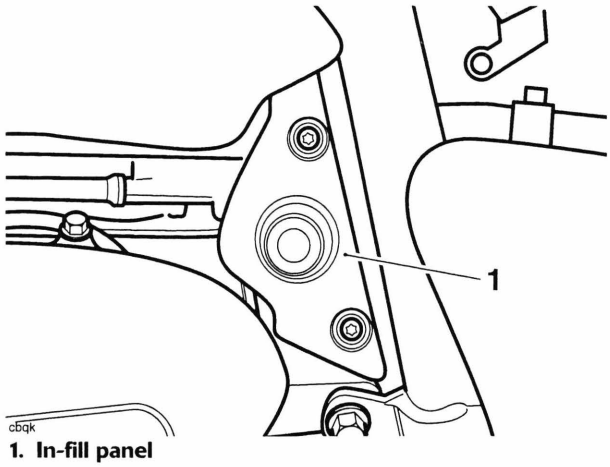

1. In-fill panel

9. Identify the position of each of the tappet buckets and shims before removing them from the head.
10. Remove the sound suppression bolt from the camshaft drive chain chest.
11. Remove the bolt head cover from the right hand rear cylinder head bolt.
12. Progressively release the cylinder head bolts in the order shown below.

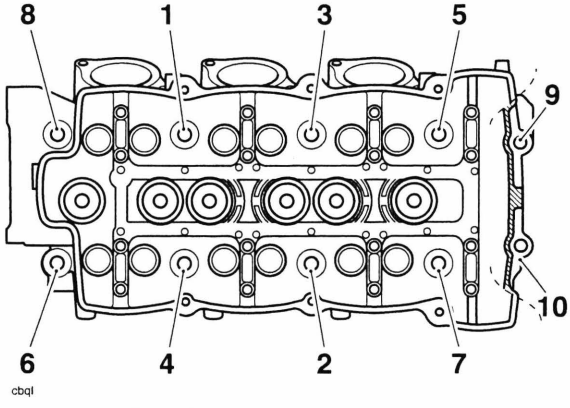

Head Bolt Release Sequence

13. Remove and discard the head bolts numbered 1 to 8 in the illustration above.
14. Remove the two smaller bolts situated at the front side of the engine.
15. Remove the head from the crankcase.

Note:

- **If necessary, lightly tap the head with a soft-faced mallet to break the gasket seal.**

16. Remove and discard the head gasket.
17. Remove the cylinder liners (see page *5-20*).

Note:

- **Cylinder liners must be re-sealed if the head is removed.**

Inspection

1. Thoroughly clean the surface of the cylinder head and check for damage and/or pitting of the combustion chambers.
2. Using a straight edge and feeler gauges, check the cylinder head gasket face for warp, which could lead to gasket failure. Replace the cylinder head if warped beyond the flatness limit.

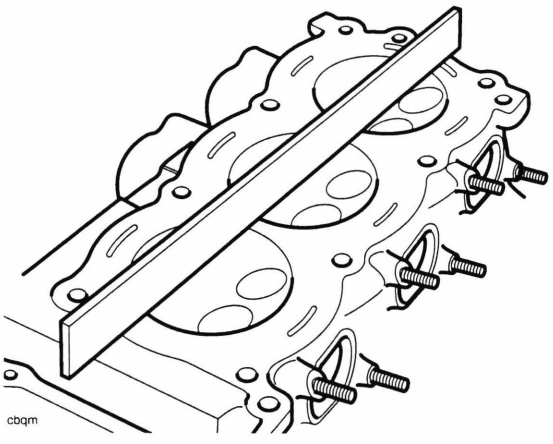

Checking Head Flatness

Cylinder head flatness tolerance	0.030 mm

3. Check the camshaft drive chain rubbing blades. Renew if worn or damaged.

⚠ Caution

Ensure all traces of fluid (coolant, oil, etc.) are removed from the threaded holes in the crankcase. Should any fluid remain in any of the threaded holes, severe crankcase damage could result from hydraulic locking of head bolts on assembly of the engine.

Installation

1. Thoroughly clean the upper faces of the crankcase and liners. Also clean the liner to crankcase mating faces.
2. Fit the cylinder liners (see page *5-21*).
3. Move the camshaft drive chain rubbing blades to a position that allows the head to fit over them.
4. Ensure that both head dowels remain in position in the crankcase.

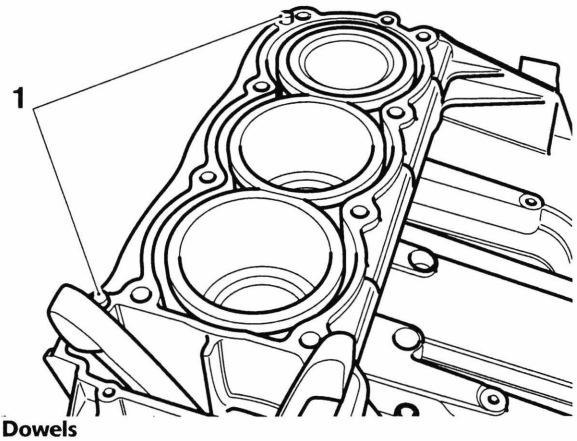

1. Dowels

5. Carefully separate the two layers of the head gasket, apply ThreeBond 1110B around the oil feed hole between the layers.

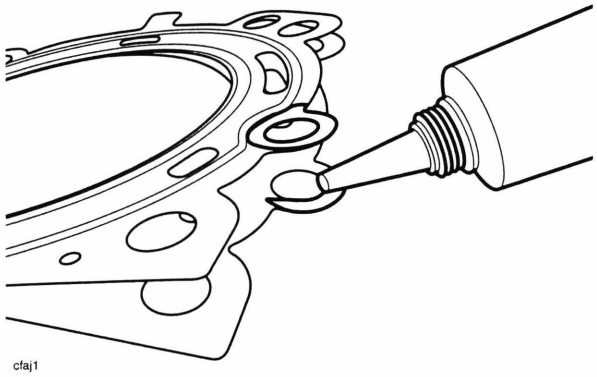

6. Apply approximately 0.4 grams of ThreeBond 1110B onto the upper and lower surfaces of the head gasket next to the oil feed hole.

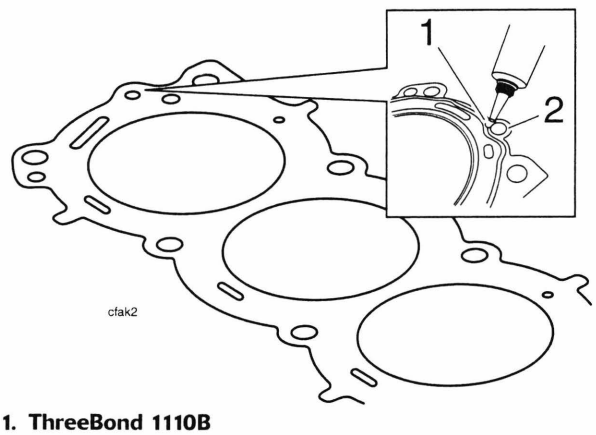

1. ThreeBond 1110B
2. Oil feed hole

7. Spread the ThreeBond 1110B around the oil feed hole to a diameter of approximately 18 mm.

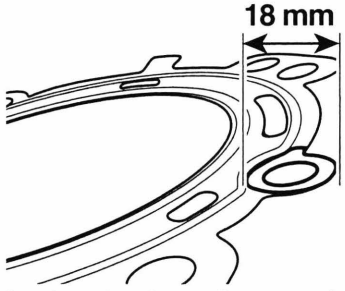

8. Fit the head gasket immediately to the crankcase after the ThreeBond 1110B has been applied.
9. Position the cylinder head gasket to the crankcase.
10. Lower the cylinder head over the camshaft drive chain rubbing blades and locate it onto the dowels.

⚠ Caution

Cylinder head bolts must never be reused and must always be replaced if removed or loosened.

Use the correct procedure to tighten the cylinder head bolts carefully following the three-stage procedure below. This will ensure the long-term reliability of the cylinder head gasket.

Failure to follow the correct tightening procedure or re-use of old head bolts may lead to engine damage and premature failure of the cylinder head gasket.

11. Lubricate the under head areas of the cylinder head bolts with a 50/50 solution of engine oil and molybdenum disulphide grease.
12. In the sequence shown below, tighten the cylinder head bolts in three stages as follows:

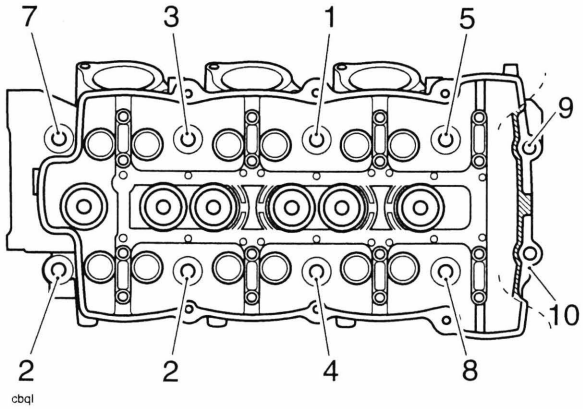

Cylinder Head Bolt Tightening Sequence

13. In the sequence shown above, tighten bolts 1 through 8 to **20 Nm**.
14. In the sequence shown above, tighten bolts 1 through 8 to **50 Nm**.
15. In the sequence shown above, tighten bolts 1 through 8 to **70 Nm**.
16. In the sequence shown above, tighten bolts 1 through 8 through a further **90°** using tool 3880105-T0301 or similar to measure the torque-angle.
17. Tighten bolts 9 and 10 to **12 Nm**.
18. Refit the bolt head cover to the right hand rear cylinder head bolt.
19. Lubricate the tappet buckets with a 50/50 solution of molybdenum disulphide grease and engine oil, then refit them and the valve shims to their original locations in the head.
20. Refit the camshafts (see page *3-18*).
21. Refit the sound suppression bolt to the camshaft drive chain chest and tighten to **12 Nm**.
22. Check and adjust the valve clearances (see page *3-20*).
23. Reconnect the coolant temperature sensor and the oil pressure sensor.
24. Refit the bypass and top hoses.
25. Refit the oil tank (see page *9-17*).
26. Refit the throttle bodies (see page *11-167*).
27. Refit the exhaust system (see page *11-180* for Rocket III and Classic, see page *11-185* for Rocket III Touring).
28. Refit the radiator (see page *12-15*).
29. Refit the fuel tank (see page *11-124* for Rocket III and Classic, see page *11-127* for Rocket III Touring).
30. Refit both engine in-fill panels, tightening the fixings to **3 Nm**.
31. Start the engine and allow it to idle while checking for air, oil, coolant and exhaust leaks. Rectify as necessary.
32. Check and top up the cooling system (see page *12-5*).
33. Check and top up the oil level (see page *9-6*).

Valves and Valve Stem Seals

Removal from the cylinder head

1. Remove each valve from the head using a valve spring compressor. The compressor must act on the top cup to allow removal of the valve collets.
2. Once the collets are released, remove the following items:
   - collets;
   - valve spring cap;
   - valve spring;
   - valve stem seal;
   - valve spring thrust washer.

Installation

1. Apply a thin coat of molybdenum disulphide grease to the valve stem.
2. Install the valve into the valve guide and refit the thrust washer to the valve spring recess (if removed).
3. Fit the valve stem seal over the valve stem and, using a suitable tool, press down fully until the seal is correctly seated over the valve guide.

Note:

- **During fitment of the valve stem seal, two distinctly different degrees of resistance will be noted when the seal is correctly fitted.**

4. Firstly, press the seal down the valve stem until the lower side of the seal comes into contact with the valve guide. Greater resistance is felt at this contact point and further gentle pressure is then required to locate the seal over the top end of the valve guide.
5. On application of this pressure, the seal can be felt to positively locate over the top face of the valve guide. Once correctly positioned, the seal cannot be pushed down any further.

⚠ Caution

Incorrect fitment of the valve stem oil seals could lead to high oil consumption and blue smoke emissions from the exhaust system. Do not use excessive force in fitting the seal as this may break the seal ring.

6. Install the valve spring and spring cap.
7. Compress the valve spring ensuring that the spring is compressed squarely to prevent damage to components.
8. Fit the valve collets ensuring their correct location in the spring cap and valve as the spring compressor is released.

⚠ Caution

Always check for correct location of the valve collets during and after assembly. If not fitted correctly, the collets may become dislodged when the engine is running allowing the valves to contact the pistons. Any such valve to piston contact will cause severe engine damage.

4 Clutch

Table of Contents

Exploded View - Clutch Controls - Rocket III, Classic and Roadster 4.2

Exploded View - Clutch Controls - Rocket III Touring 4.3

Exploded View - Clutch 4.4

Exploded View - Clutch Cover 4.5

Clutch Cable 4.6

- Removal 4.6
- Examination 4.7
- Installation 4.7

Clutch Cover 4.7

- Removal 4.7
- Installation 4.7

Clutch 4.8

- Removal 4.8

Friction Plate Inspection 4.10

- Thickness 4.10

Steel Plate Inspection 4.10

- Bend/warp 4.10
- Clutch pack height 4.10
- Installation 4.11

Exploded View - Clutch Controls - Rocket III, Classic and Roadster

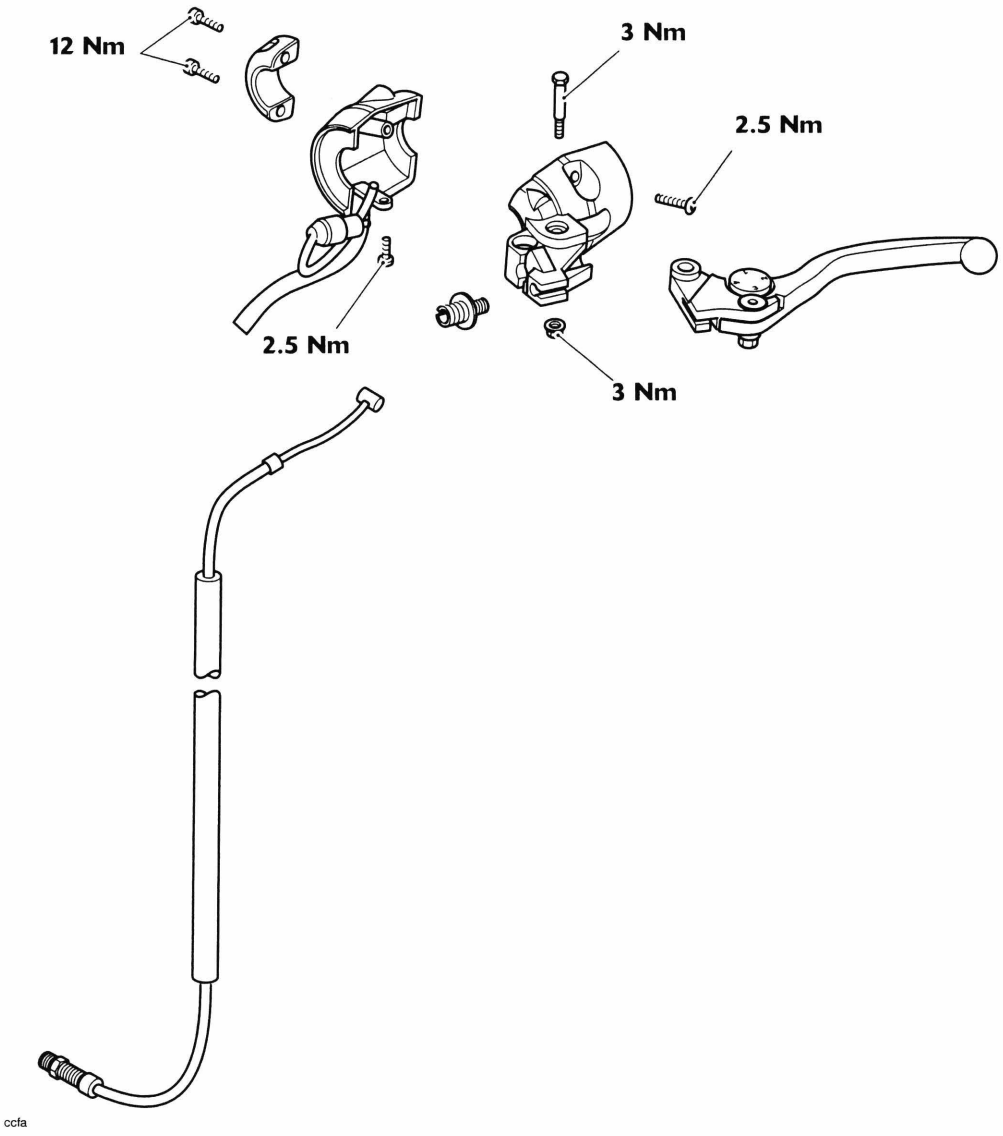

Exploded View - Clutch Controls - Rocket III Touring

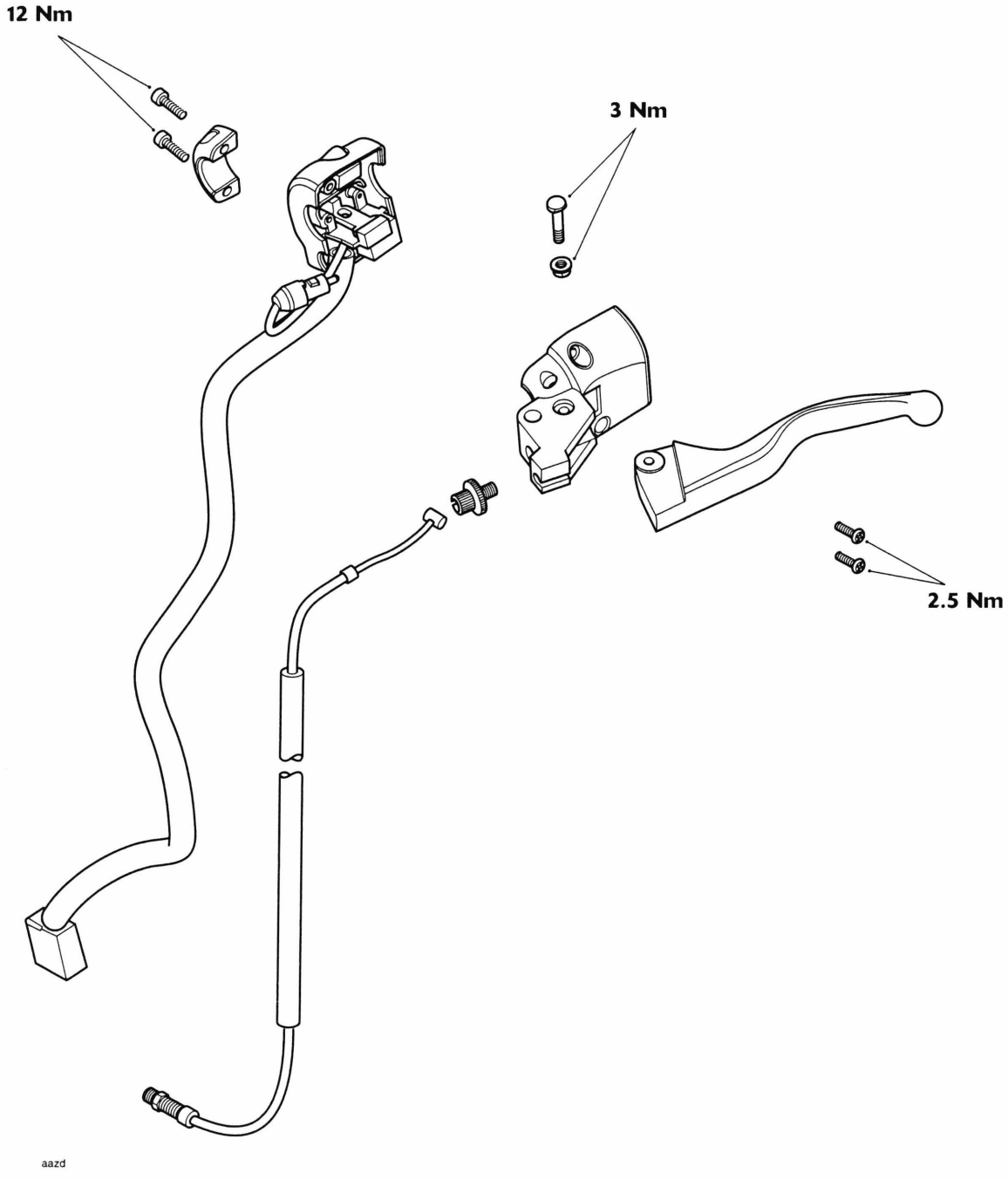

Exploded View - Clutch

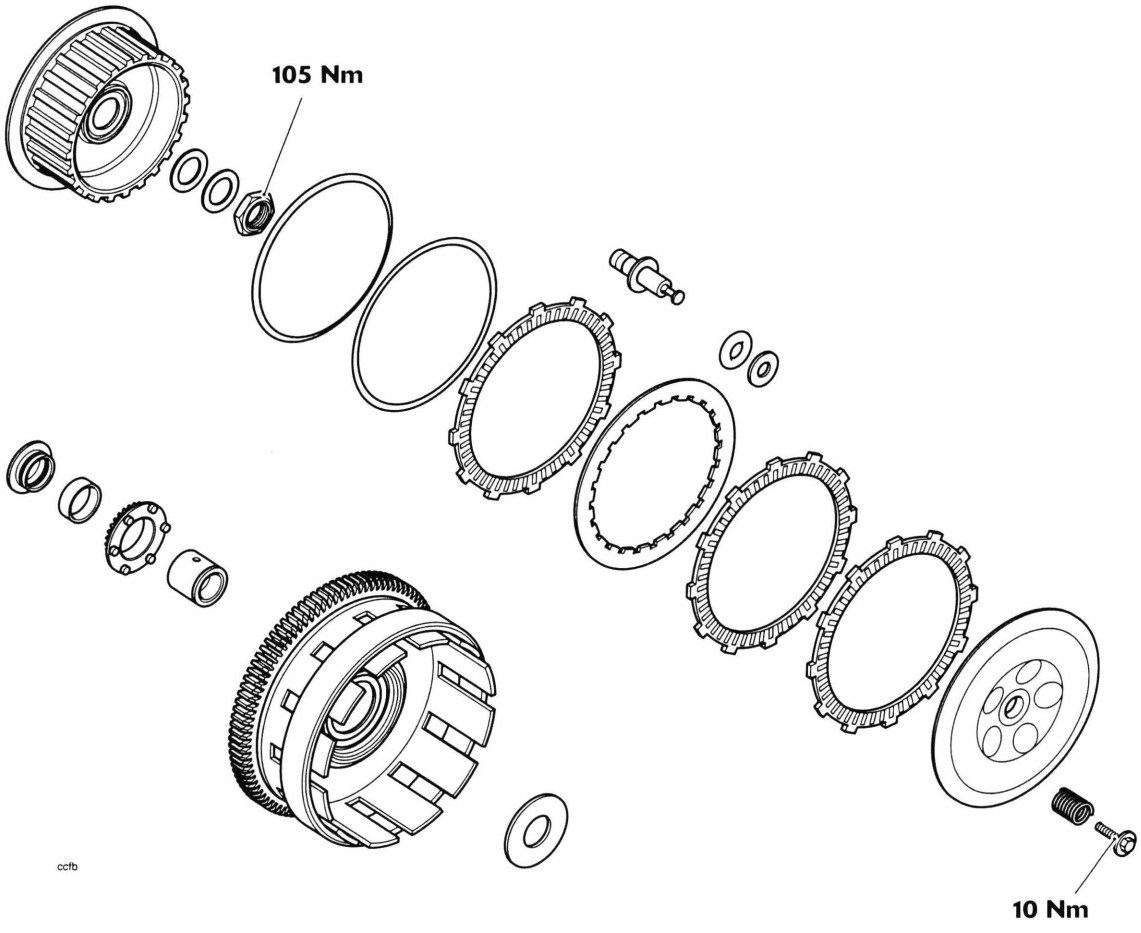

Exploded View - Clutch Cover

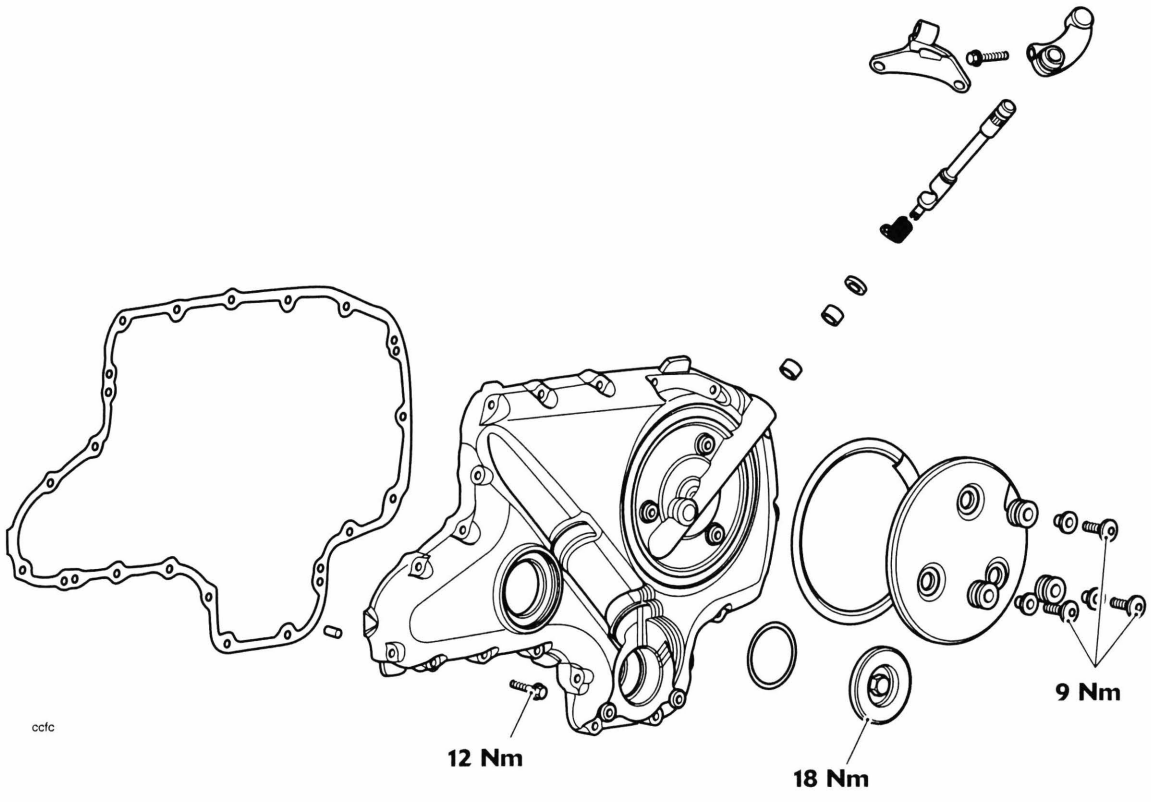

Clutch Cable

Removal

Warning

Before starting work, ensure the motorcycle is stabilised and adequately supported. This will help prevent it from falling and causing injury to the operator or damage to the motorcycle.

1. Remove the seat (see page *17-18* for Rocket III, Classic and Roadster, see page *17-19* for Rocket III Touring).
2. Disconnect the battery, negative (black) lead first.
3. Slacken the cable locknut and release the adjuster at the engine end to give maximum play in the cable.

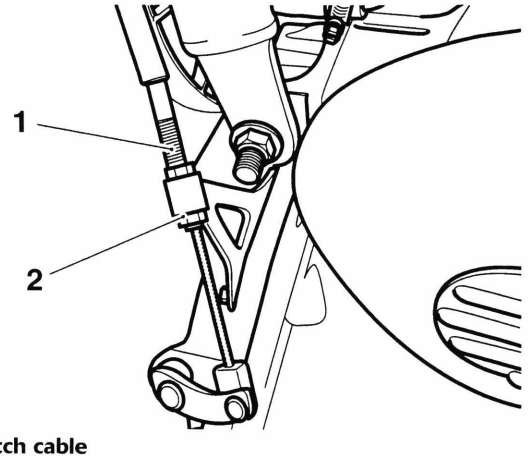

cbvn

1. Clutch cable
2. Adjuster

4. Release the clutch cable from the actuating arm by pushing the inner cable nipple through the arm and sliding the cable out. Detach the cable from the bracket.

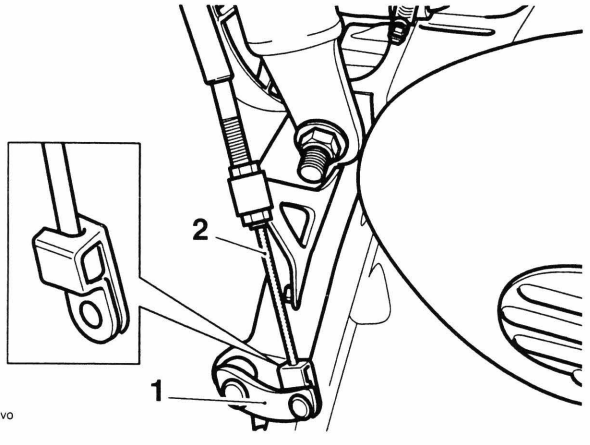

cbvo

1. Actuating arm
2. Inner cable

5. Align the slots in the lever adjuster and locknut.

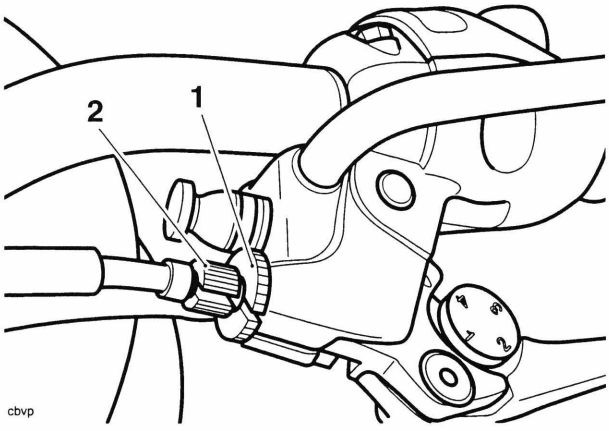

cbvp

Rocket III, Classic and Roadster Shown, Rocket III Touring Similar

1. Locknut
2. Lever adjuster

6. Pull in the clutch lever and turn the inner cable, anti-clockwise through the slots in the adjuster and lock nut, until the cable can be detached from the lever.

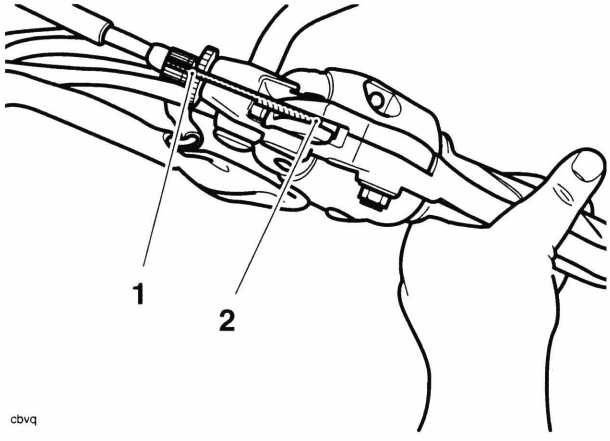

cbvq

1. Nut/lock nut slots
2. Cable release point

7. Remove the cable from the motorcycle noting the cable routing, particularly where it passes through the steering area.

Note:

- **To ensure the same route can be followed on installation, tie a length of string to one end while pulling the cable through from the other. When installing the new cable, tie the string to one end of the cable and use it to guide the new cable into position.**

Examination

1. Check the inner cable for free movement through the outer cable.
2. Examine the inner cable for frayed strands.
3. Examine the two inner cable nipples for signs of looseness and damage. Replace the cable if necessary.

Installation

1. Position the cable to the motorcycle following the same routing as noted during removal.
2. Attach the inner cable to the clutch lever and actuating arm using a reversal of the removal process.
3. Refit the outer cable to the adjuster bracket at the engine end.

Note:

- **Ensure that the two adjuster nuts are positioned one either side of the bracket.**

4. Set the lever adjuster to a point where an equal adjustment is possible in both directions.
5. Set the adjuster at the clutch end to give a preliminary setting of 2 - 3 mm of free play as measured at the lever.
6. Operate the clutch lever several times and re-check the amount of free play present.
7. Set the final adjustment of the cable to give 2 - 3 mm of free play at the lever by turning the adjuster nut and lock nut at the lever end. Secure the setting with the knurled lock nut.

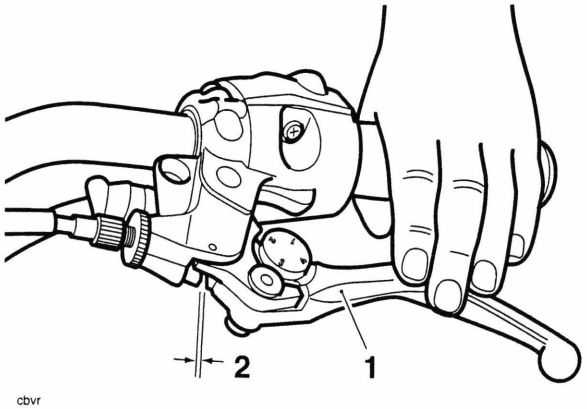

cbvr

Rocket III, Classic and Roadster Shown, Rocket III Touring Similar

1. **Clutch lever**
2. **Correct setting, 2 - 3 mm**

8. Reconnect the battery positive (red) lead first.
9. Refit the seat (see page *17-18* for Rocket III, Classic and Roadster, see page *17-19* for Rocket III Touring).

Clutch Cover

Removal

Warning

Before starting work, ensure the motorcycle is stabilised and adequately supported. This will help prevent it from falling and causing injury to the operator or damage to the motorcycle.

1. Remove the radiator (see page *12-13*).
2. Remove the water pump (see page *12-8*).
3. Remove the coolant pipe running between the crankcase and water pump.
4. Disconnect the clutch cable (see page *4-6*).
5. Release the ring of bolts securing the clutch cover to the crankcases.
6. Place an oil catch tray beneath the clutch cover to collect any oil that may spill out on removal.
7. Carefully withdraw the cover, disengaging the lifter arm as it is eased forward.

Installation

1. Thoroughly clean the cover and crankcase mating faces.
2. Position a new gasket to the crankcase.
3. Refit the cover ensuring that the gasket does not become dislodged.

Note:

- **Ensure that the lifter piece engages correctly with the lifter arm during assembly. It may be necessary to pull the lifter arm forward to allow assembly to take place.**

4. Fit the bolts and tighten as described below;
   - tighten the bolts to **12 Nm** in the sequence shown below.
   - tighten bolts one and two again to **12 Nm**.

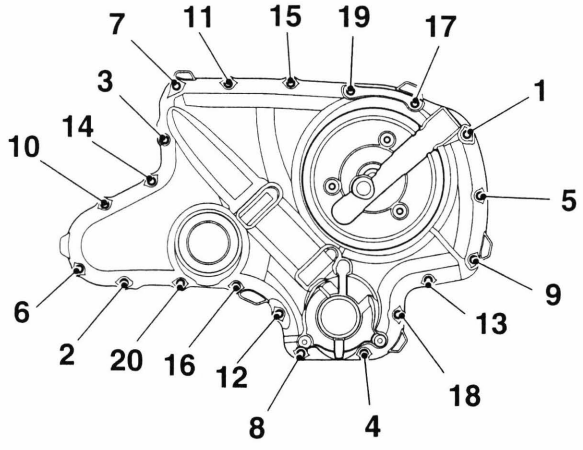

Tightening Sequence

5. Refit the clutch cable (see page *4-7*).
6. Refit the coolant pipe, tightening its fixing to **9 Nm**.
7. Refit the water pump as (see page *12-9*).
8. Refit the radiator (see page *12-15*).

Clutch

Removal

Warning

Before starting work, ensure the motorcycle is stabilised and adequately supported. This will help prevent it from falling and causing injury to the operator or damage to the motorcycle.

1. Remove the clutch cover (see page *4-7*).
2. Undo the bolts, withdraw the springs and remove the clutch pressure plate.

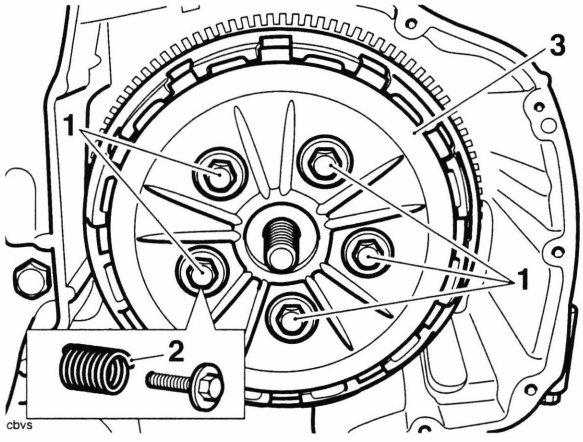

1. **Pressure plate bolts**
2. **Springs**
3. **Pressure plate**

3. Remove the lifter piece, needle bearing and thrust washer.

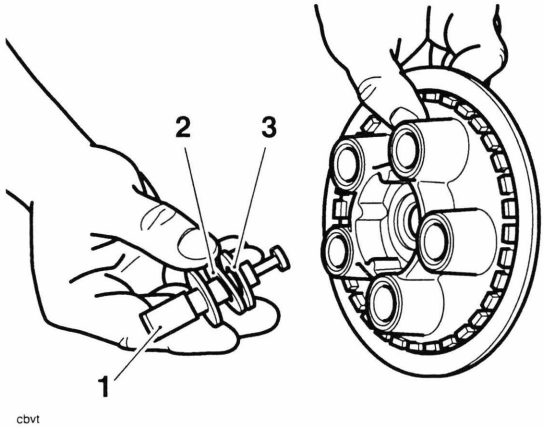

1. **Lifter piece**
2. **Needle bearing**
3. **Thrust washer**

4. Remove all the clutch friction plates and steel plates together with the anti-judder seat washer and spring. Note the orientation of all components as they are removed.

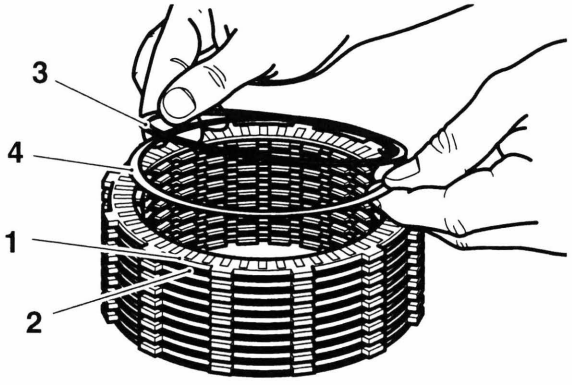

cbvu

1. **Friction plates**
2. **Steel plate**
3. **Anti-judder seat washer**
4. **Anti-judder spring**

Note:

- **The inner and outermost friction plates are different to the remainder and are also different to each other. They must not be fitted in any other positions.**
- **Refer to the following page of this section for details of clutch friction plate inspection.**
- **It is not normally necessary to disassemble the clutch further, but if the clutch inner and outer drums are to be removed, proceed as follows:**

5. Engage any gear and lock the inner and outer clutch drums together using service tool 3880025-T0301.

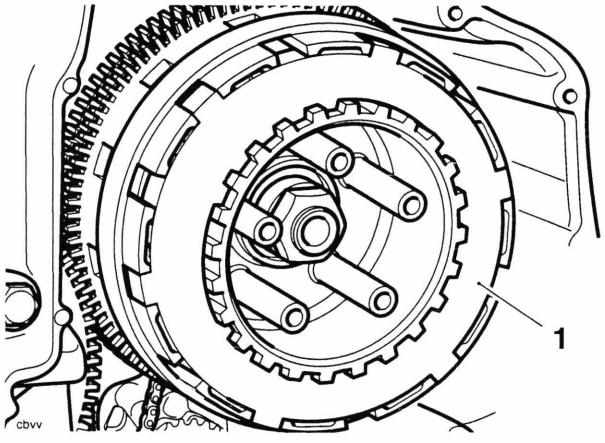

cbvv

1. **Service tool 3880025-T0301**

6. Depress the rear brake pedal to prevent the engine from turning, and then release the clutch centre nut.
7. Remove the centre nut, Belleville washer, plain washer, clutch inner drum and thrust washer.

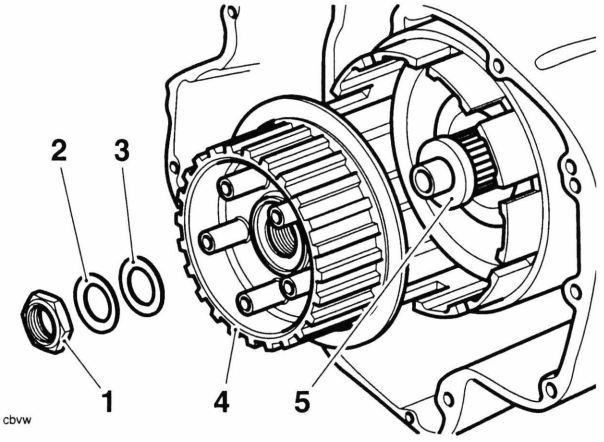

cbvw

1. **Centre nut**
2. **Belleville washer**
3. **Plain washer**
4. **Inner drum**
5. **Thrust washer**

8. Discard the Belleville washer and the plain washer.
9. Slide the clutch outer drum outwards from the engine, collecting the bearing sleeve on removal of the drum.

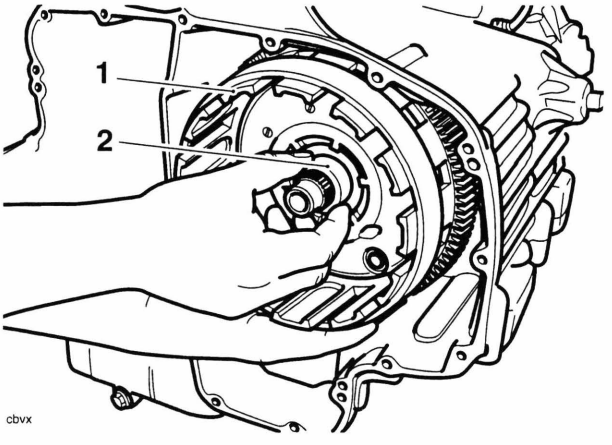

cbvx

1. **Outer drum**
2. **Bearing sleeve**

Friction Plate Inspection

Thickness

1. If any friction plate thickness is outside the service limit, replace the friction plates as a set.

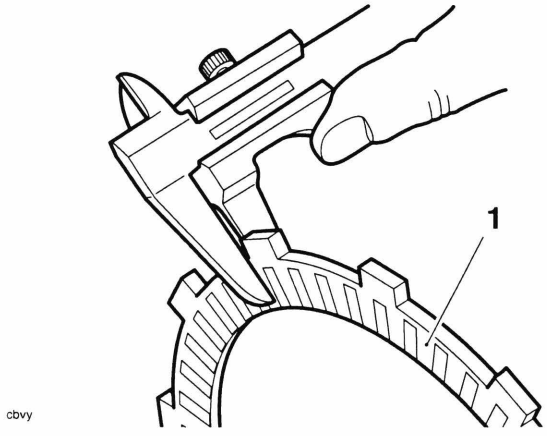

cbvy

1. Clutch friction plate

Friction plate thickness - all plates	
Standard	3.72 – 3.88 mm
Service limit	3.5 mm

Steel Plate Inspection

Bend/warp

1. Check all plates for bend and warp as follows: Place the plate being checked on a clean surface plate and attempt to pass a feeler gauge of the maximum service limit thickness between the steel plate and surface plate. If the feeler gauge can be passed beneath the steel plate at any point, renew the plates as a set.

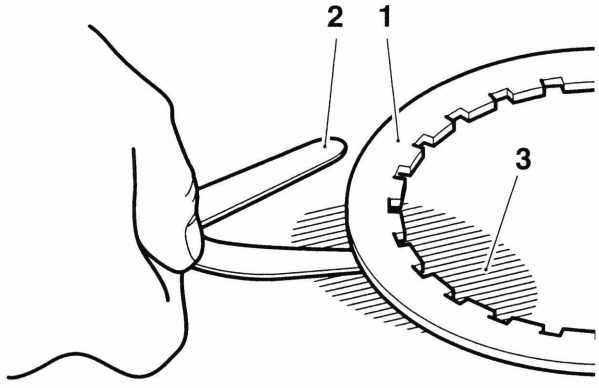

cbvz

1. Steel plate
2. Feeler gauge
3. Surface plate

Steel plate bend/warp	
Service limit	0.30 mm

Clutch pack height

The clutch pack height should only be measured if the friction plates and steel plates have been replaced.

The clutch pack height is critical for a smooth operation of the gearchange and needs to be measured prior to installation.

If used steel plates are being fitted, the clutch pack height measurement is not necessary, as the plates may not be worn to the service limit (and are therefore still serviceable), but could fall outside the clutch pack height tolerance when measured.

If building a new clutch pack its height must be correct. To achieve this, build the new clutch pack with the following:

- 1 x new outer friction plate;
- 8 x new friction plates;
- 1 x new inner friction plate;
- 9 x steel plates, 1.4 mm thick.

1. Using a clean lint free cloth wipe any excess oil from the clutch friction and steel plates.
2. Arrange the new friction and new steel plates in a stack as shown below.

Friction plate and steel plate arrangement

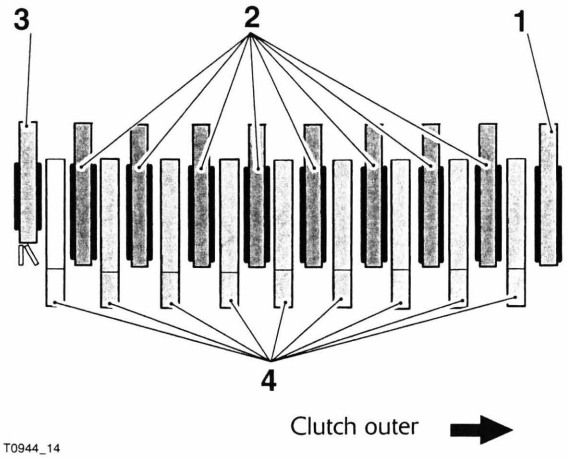

1. **Outer friction plate**
2. **Friction plates**
3. **Inner friction plate**
4. **Steel plate, 1.4 mm thickness**

3. Place the assembled clutch pack on a flat surface and measure its height as described above.
4. The correct clutch pack height for the clutch assembly is shown in the table below.

Standard height in mm	Tolerance in mm
50.60	+0.32 / -0.68

5. If the clutch pack height is incorrect, replace the friction plates and or steel plates as required.

Installation

1. Position the bearing sleeve then the clutch outer drum to the input shaft.
2. Align the oil pump drive pegs with the corresponding holes in the rear of the clutch outer drum.

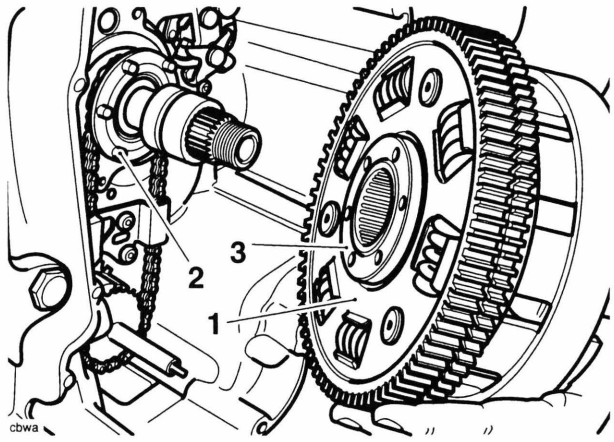

1. **Clutch outer drum**
2. **Oil pump sprocket drive pegs**
3. **Oil pump drive holes**

3. Pre-load and align the primary gear and backlash eliminator with the crank gear. Align the gears through the hole arrowed below.

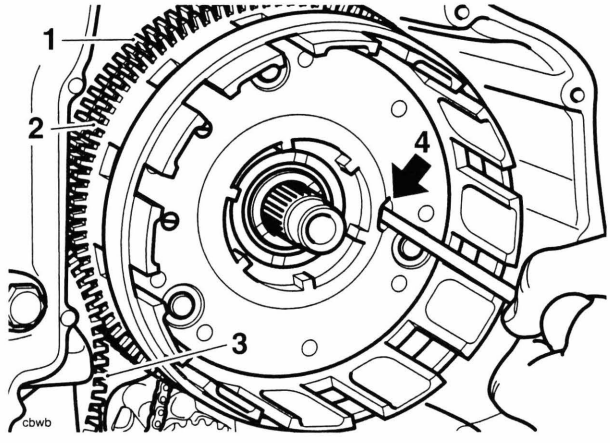

1. **Primary gear**
2. **Backlash eliminator**
3. **Crank gear**
4. **Arrowed: alignment hole**

Note:

- **When the outer drum is correctly fitted and the gears are pre-loaded correctly, the bearing sleeve will be a flush fit with the clutch drum face. In addition, a groove around the input shaft will be visible.**

4. Fit the thrust washer to the shaft.

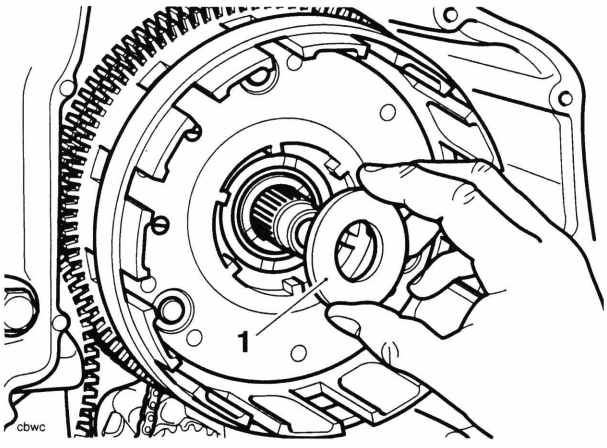

1. Thrust washer

5. Fit the clutch inner drum.
6. Fit a new plain washer, fit a new Belleville washer ('OUT' mark facing outwards), and refit the centre nut.

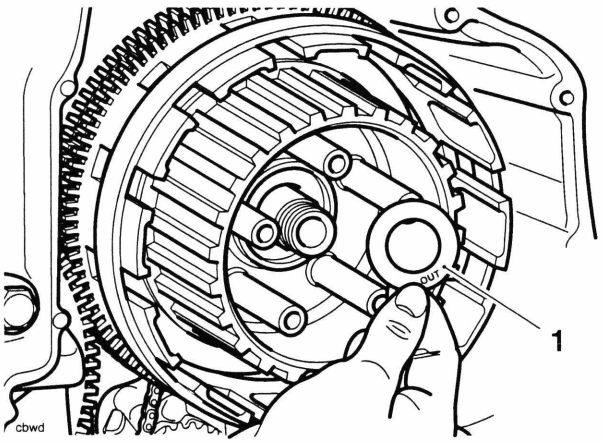

1. Belleville washer 'OUT' mark

7. Lock the inner and outer drums together using service tool 3880025-T0301. Depress the rear brake pedal to prevent the engine from turning, and tighten the clutch centre nut to **105 Nm**. Remove the service tool.

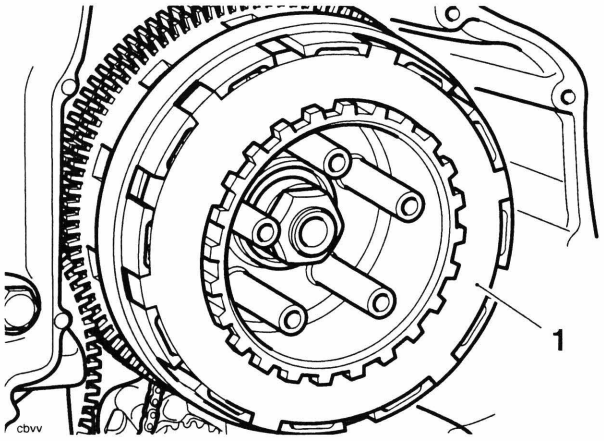

1. 3880025-T0301

8. Stake the clutch centre nut to the input shaft.
9. Disengage second gear and check for free rotation of the clutch inner drum.
10. Coat all clutch friction plates in clean engine oil.
11. Fit the friction plates, steel plates, anti-judder seat and spring to the clutch basket, in the same order as noted during removal.

Note:

- **The inner and outermost friction plates are different to the remainder and are also different to each other. They must not be fitted in any other positions.**

12. Refit the clutch pull rod.

Note:

- **For models up to engine number 329763 that require new clutch springs, refer to the parts information.**

13. Refit the clutch pressure plate together with the springs and bolts. Tighten the bolts to **10 Nm**.

Note:

- **The pull rod should be free to move in and out and also it should be free to turn.**

14. Fit the clutch cover (see page *4-7*).

5 Crankshaft

Table of Contents

Exploded View - Crankshaft, Connecting Rod and Piston 5.2

Exploded View - Crankcase Fixings 5.3

Exploded View - Crankcase and Liners 5.4

Crankcases 5.5

- Removal 5.5
- Disassembly 5.5
- Assembly 5.8

Crankshaft 5.12

- Removal 5.12
- Installation 5.12

Connecting Rods 5.13

- Removal 5.13
- Installation 5.13

Connecting Rod Big End Bearing Selection/Crankpin Wear Check 5.15

- Connecting Rod Bearing Selection 5.15

Crankshaft Main Bearing/Journal Wear 5.16

- Checking Crankshaft Clearance using Plastigauge 5.16
- Crankshaft End Float 5.16

Pistons 5.17

- Disassembly 5.17
- Piston Wear Check 5.17
- Piston Rings/Ring Grooves 5.18
- Piston Ring Gap 5.18
- Piston Assembly 5.19
- Cylinder Wear 5.20

Cylinder Liners 5.20

- Removal 5.20
- Installation 5.21

Exploded View - Crankshaft, Connecting Rod and Piston

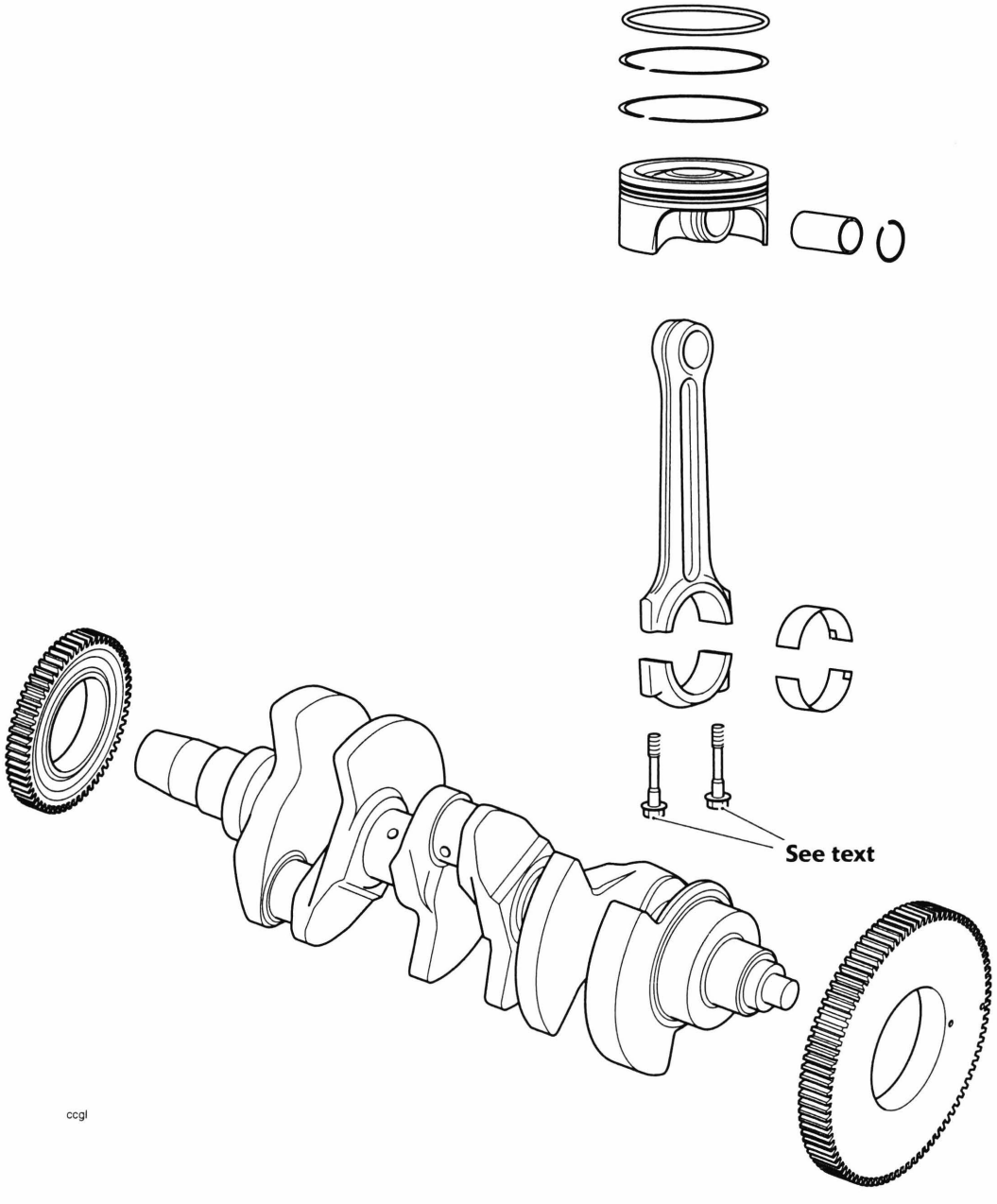

Exploded View - Crankcase Fixings

All fixings - See text

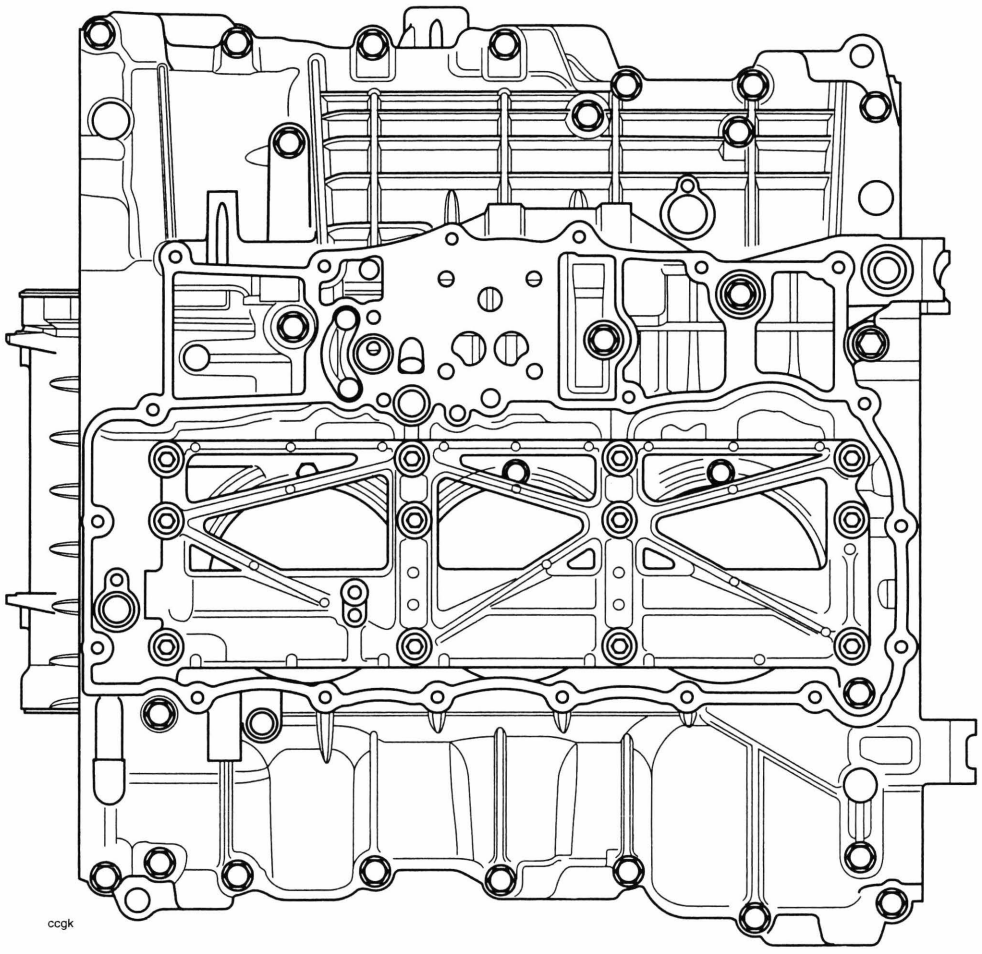

Exploded View - Crankcase and Liners

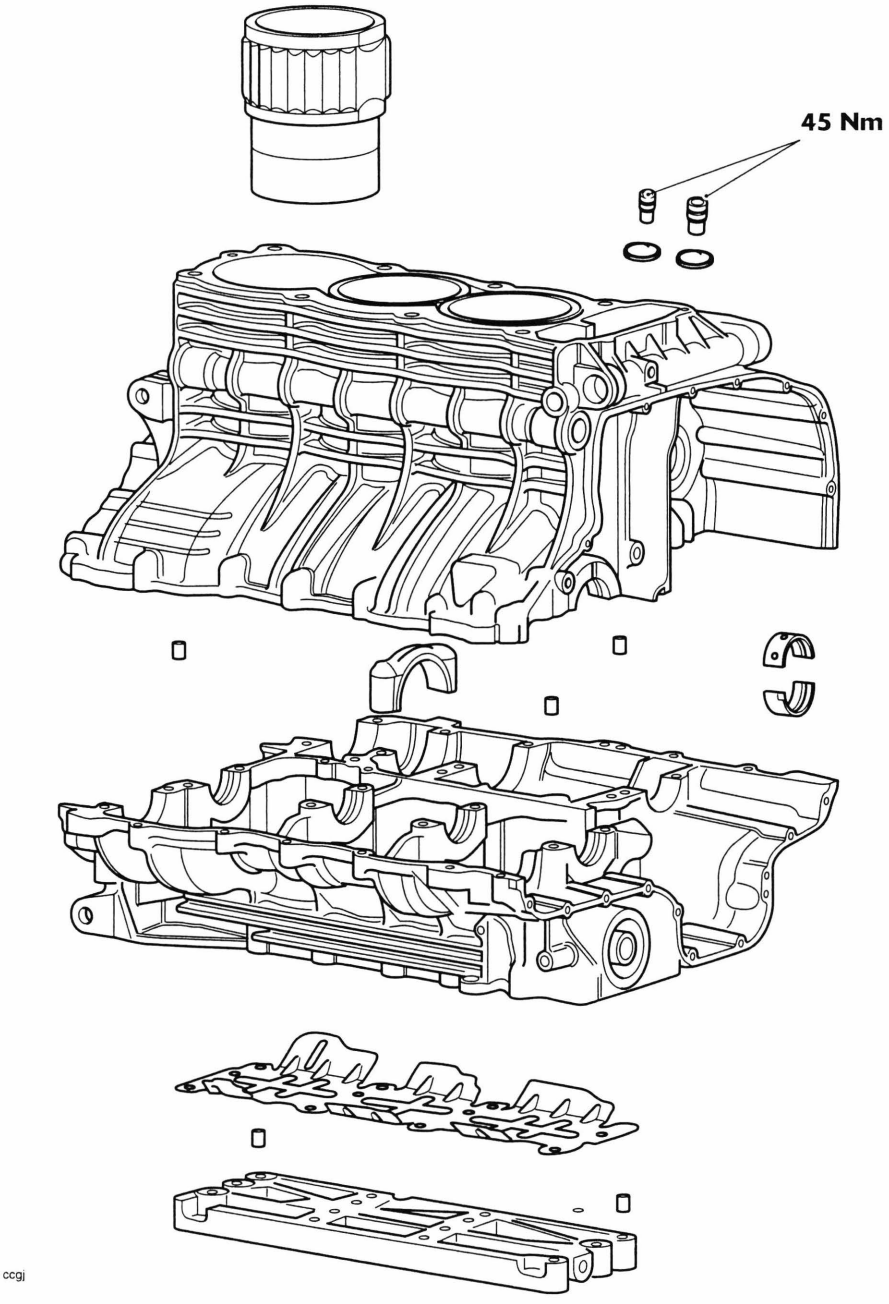

Crankcases

Warning

The following procedures often require lifting of heavy components. To avoid injury, always lift heavy components with a hoist or block and tackle and never attempt to manually lift items that are too heavy. Injury may result from failure to use the correct lifting equipment.

Caution

The upper and lower crankcases are machined as a matched set and must never be assembled to non-matching halves. Doing so will cause seizure of the engine.

Note:

- **The crankcase halves may be separated with the cylinder head fitted.**
- **If the crankshaft main bearing shells are removed from the crankcase, remove and collect the three loose-fitting piston cooling jets from the upper crankcase.**

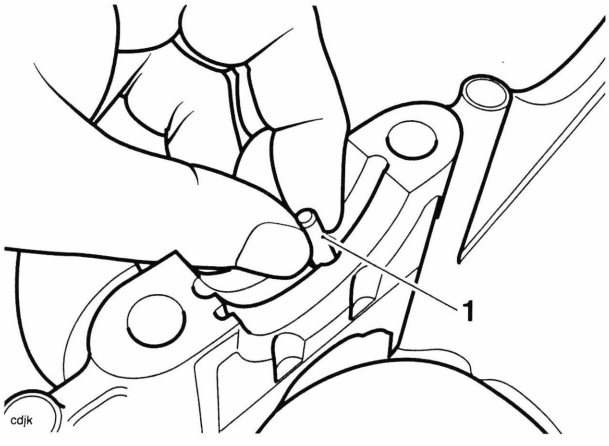

1. Piston cooling jet

If the big end bolts have been loosened or removed, new bolts must be installed.

Caution

During crankcase assembly, ensure the three piston cooling jets are re-installed. If the piston cooling jets are omitted, oil pressure will be reduced. Running the engine with low oil pressure will cause severe engine damage.

Removal

1. Remove the engine from the frame (see page *10-2*).
2. Remove the clutch (see page *4-8*).
3. Remove the camshaft drive chain (see page *3-10*).
4. Remove the starter motor (see page *18-37*).
5. Remove the alternator (see page *18-34*).
6. Remove the oil pump drive and pressure oil pump (see page *9-12*).
7. Remove the torsional damper shaft (see page *8-12*).
8. Remove the sump (see page *9-10*).

Disassembly

1. Remove the oil pipes from the lower crankcase.

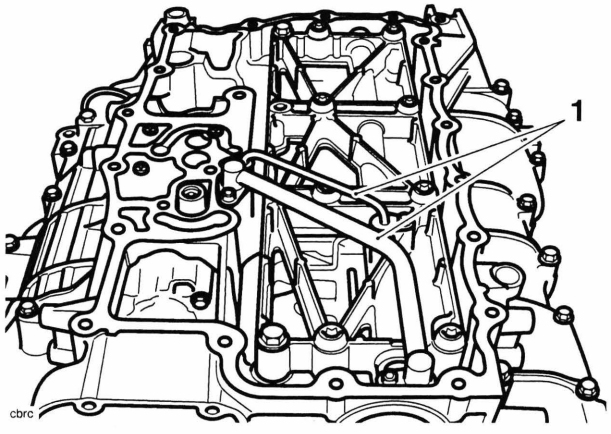

1. Oil pipes

2. Remove the non-return valve from the scavenge oil pump, by gently pulling it outwards from its location.

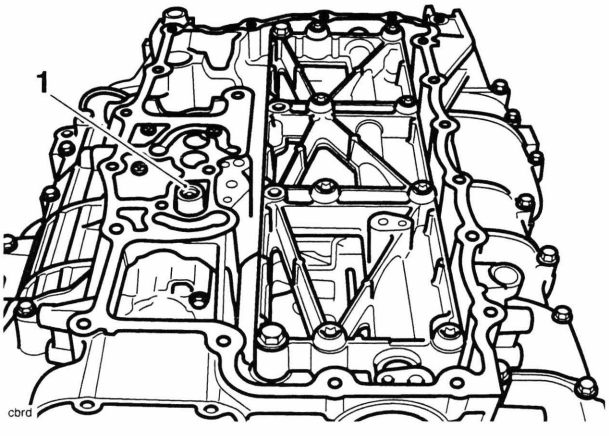

1. Non-return valve

Note:

- **For models with engine number up to 214416 continue from step 3 to 6. Then continue from step 10 to step 12.**
- **For models with engine number from 214417 continue from step 7 to step 12.**

Models up to engine number 214416:

3. In the sequence shown below, release the bolts securing the main bearing ladder to the crankcases.

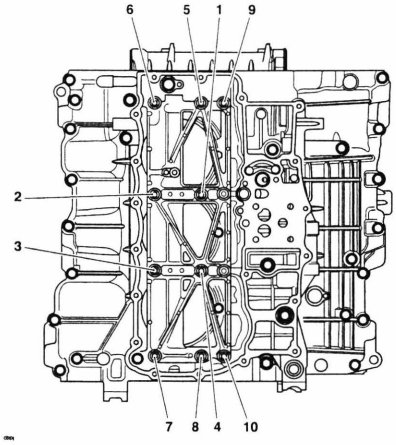

Main Bearing Ladder Bolt Release Sequence

4. Collect the bolts, then detach the ladder and baffle plate from the crankcase noting the position of both location dowels, which should be removed for safe-keeping.

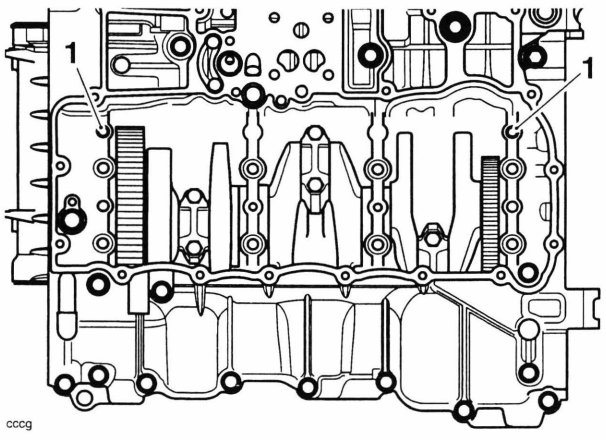

1. Dowels

5. Starting from bolt 11, release the lower crankcase bolts in the sequence shown in the diagram below. Remove and discard the bolts.

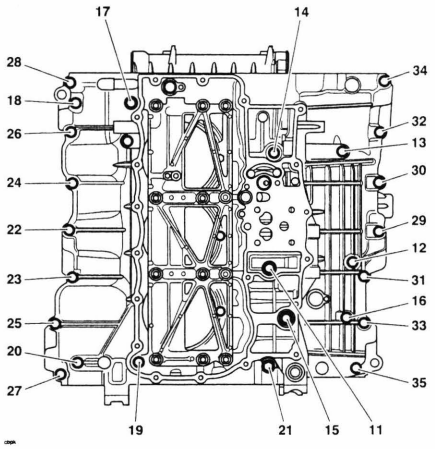

Lower Crankcase Bolt Release Sequence

6. For models up to engine number 214416, continue from step 11.

Models from engine number 214417:

7. In the sequence shown below, release the bolts securing the main bearing ladder to the crankcases.

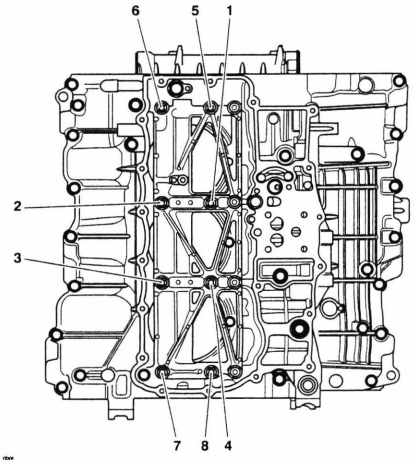

Main Bearing Ladder Bolt Release Sequence

8. Collect the bolts, then detach the ladder and baffle plate from the crankcase noting the position of both location dowels, which should be removed for safe-keeping.

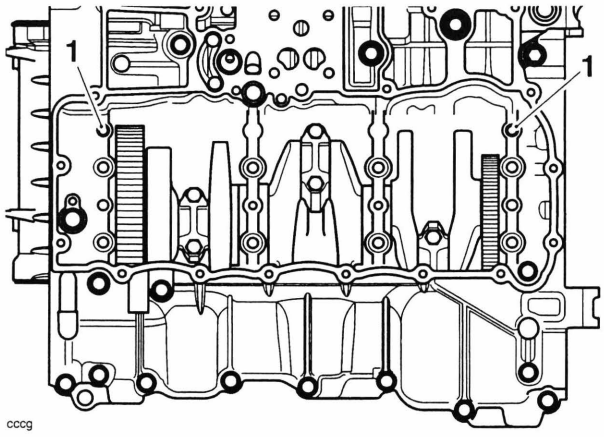

1. Dowels

9. Starting from bolt 9, release the lower crankcase bolts in the sequence shown in the diagram below. Remove and discard the bolts.

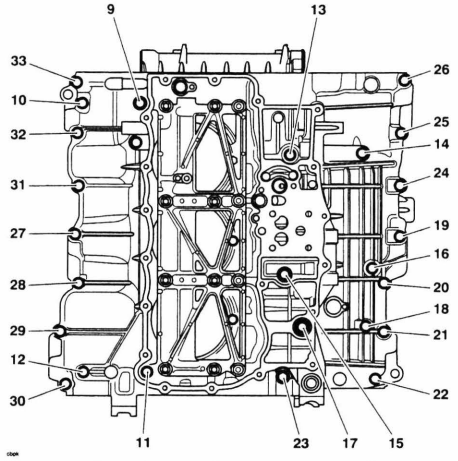

Lower Crankcase Bolt Release Sequence

All Models:

10. From inside the rear of the crankcases, collect the bearing cap securing the output shaft to the lower crankcase.

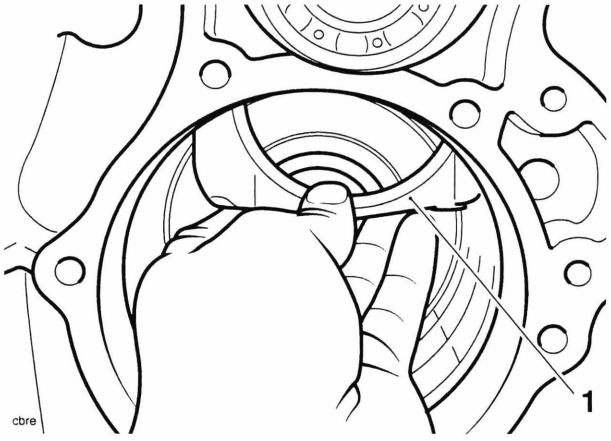

1. Output shaft bearing cap

> **⚠ Caution**
>
> Do not use levers to separate the upper and lower sections of the crankcase as damage to the crankcases could result.

Note:

- **Always check that all bolts have been released before attempting to separate the cases. Bolts are fitted in discreet locations such as under the pressure oil pump and inside hollow bosses.**

11. Separate the lower and upper crankcases noting the position of the three location dowels, which should be removed for safe-keeping.

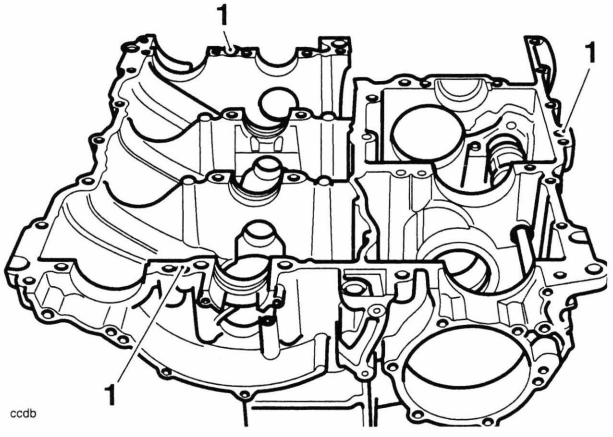

1. Dowel locations

12. At this point, the balancer shaft may be removed. To detach the crankshaft, the big end caps must also be removed (see page *5-13*).

Assembly

1. Use high flash-point solvent to clean the crankcase mating faces. Wipe the surfaces clean with a lint-free cloth.
2. Ensure that the three locating dowels are in position in the upper crankcase.

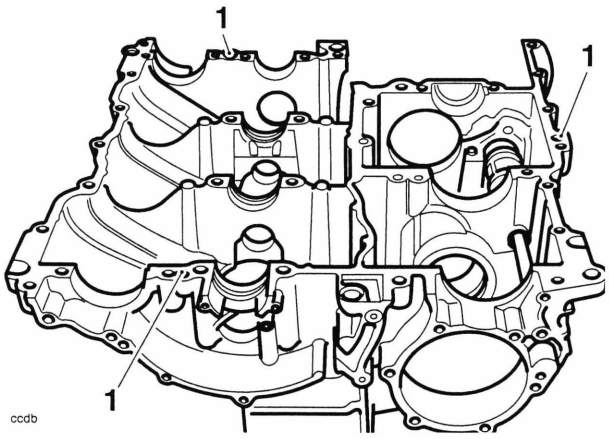

1. Dowels

3. Apply a thin bead of silicone sealant to the lower crankcase mating faces (at the factory, ThreeBond 1207B is used).

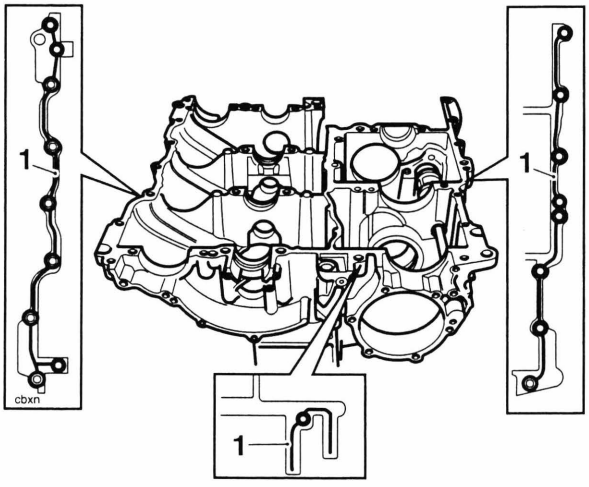

1. Sealer Areas

⚠ Caution

Do not use excessive amounts of sealer. The extra sealer may become dislodged and could block the oil passages in the crankcases, causing severe engine damage.

4. If removed, insert the three piston cooling jets into the main bearing housings in the upper crankcase.

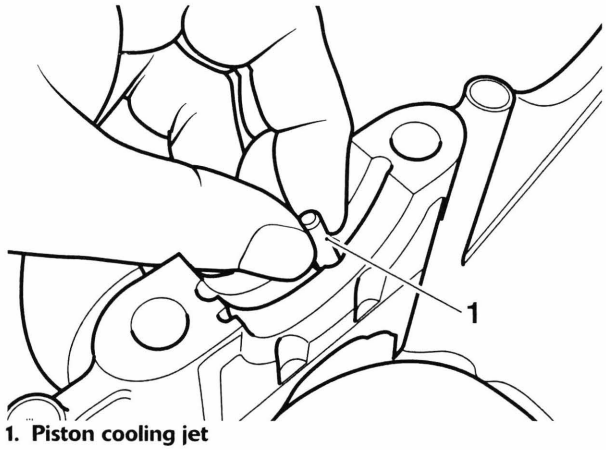

1. Piston cooling jet

⚠ Caution

Ensure the three piston cooling jets are installed. If the piston cooling jets are omitted, oil pressure will be reduced. Running the engine with low oil pressure will cause severe engine damage.

5. Install and lubricate the crankshaft main bearing shells with clean engine oil (see bearing selection on page *5-16* before proceeding).
6. Install the crankshaft to the upper crankcase.

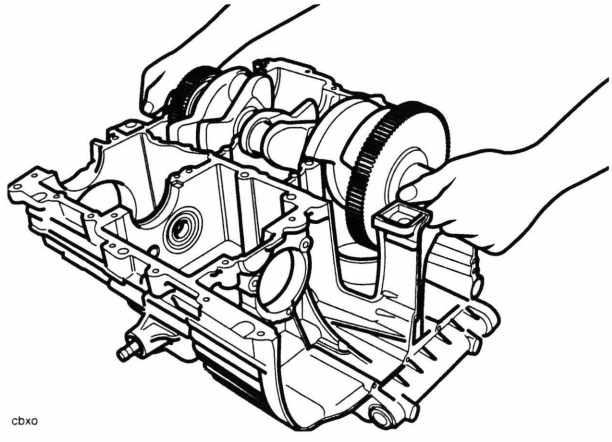

Installing The Crankshaft

7. Fit the big end caps and tighten them (see page *5-13* for the tightening sequence and torque).
8. Install and lubricate the balancer shaft ensuring it is 'timed' to the crankshaft correctly (see page *7-3*).
9. Lubricate the crankshaft journals with clean engine oil.
10. Position the lower crankcase to the upper. An assistant may be required to support the crankcase during alignment.

11. From inside the rear of the crankcases, fit the bearing cap securing the output shaft to the lower crankcase.

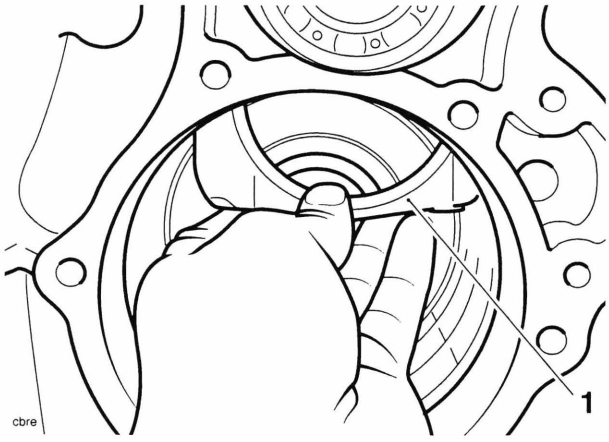

1. Output shaft bearing cap

12. Fit the new bolts into the lower crankcase and hand tighten them.

> **⚠ Caution**
>
> Main bearing bolts must never be reused and must always be replaced if removed or loosened.
>
> Failure to follow the correct tightening procedure or reuse of old bolts may cause severe engine damage.

13. Position the main bearing ladder, baffle and new bolts to the crankcase (baffle lugs facing into the engine).

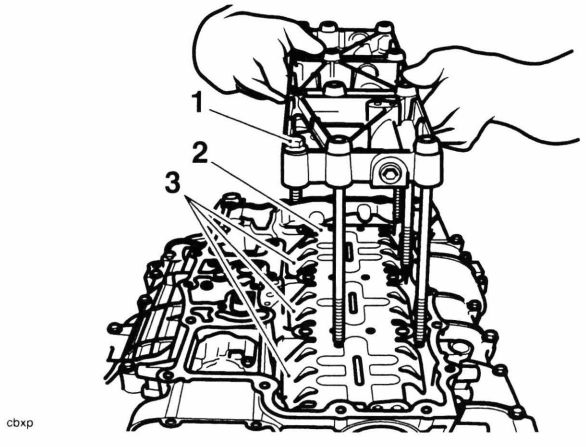

1. Main bearing ladder
2. Baffle
3. Baffle lugs

Note:

- **For models with engine number up to 214416 continue from step 14 to 15. Then continue from step 17 to step 26.**
- **For models with engine number from 214417 continue from step 16 to step 26.**

Models up to engine number 214416

14. Tighten the crankcase screws as follows:

Note:

- **The crankcase screws are tightened in stages.**

Stage 1 - all screws

In the sequence shown below, tighten all crankcase fixings to **10 Nm**.

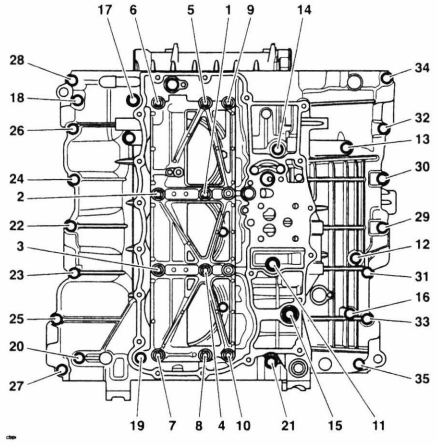

Crankcase Fixing Tightening Sequence, all fixings

Stage 2

In the sequence shown below, tighten fixings 1 through 8 to **20 Nm**.

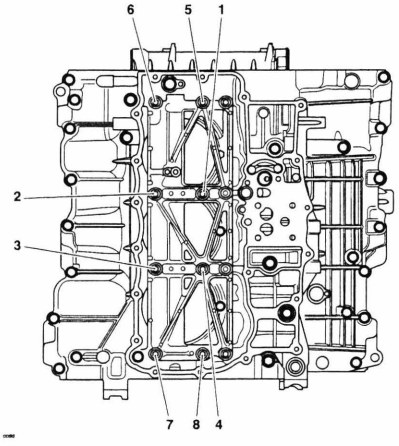

Stage 3

In the sequence shown below, tighten bolts 1 through 8 through a further 90° using tool 3880105-T0301 or similar to measure the torque-angle.

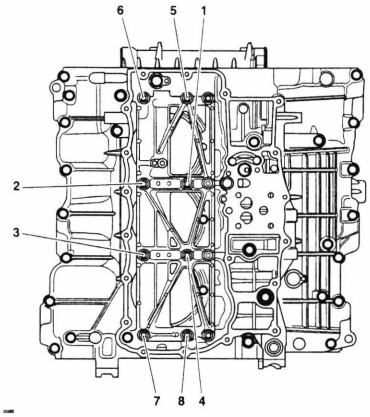

Crankcase Bolt Tightening Sequence, fixings 1-8

Stage 4

In the correct sequence, tighten fixings 9 through 35 to **32 Nm**.

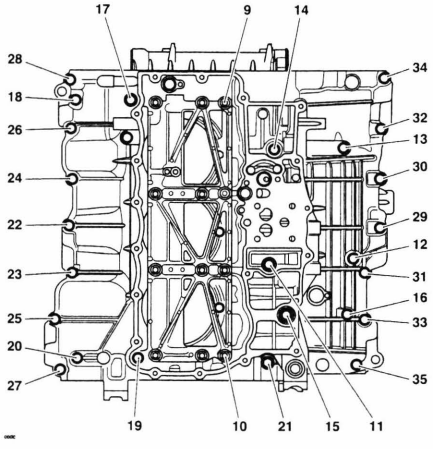

Crankcase Fixing Tightening Sequence, fixings 9-35

15. For models up to engine number 214416, continue from step 17.

Models from engine number 214417

> **⚠ Caution**
>
> Failure to follow the correct screw tightening sequence may result in permanent crankcase damage.
>
> Main bearing bolts must never be reused and must always be replaced if removed or loosened.
>
> Failure to follow the correct tightening procedure or reuse of old bolts may cause severe engine damage.

16. Tighten the crankcase screws as follows:

Note:

- **The crankcase screws are tightened in stages.**

Stage 1 - all screws

In the sequence shown below, tighten all crankcase fixings to **10 Nm**.

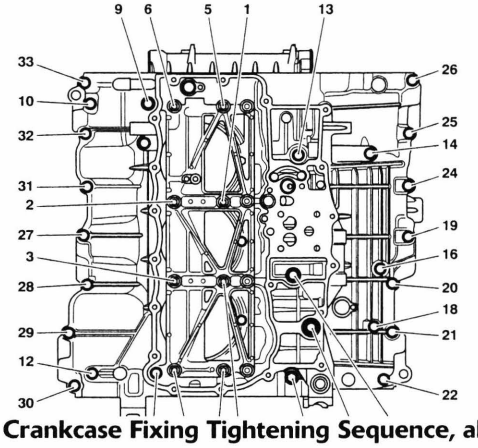

Crankcase Fixing Tightening Sequence, all fixings

Stage 2

In the sequence shown below, tighten fixings 1 through 8 to **20 Nm**.

Stage 3

In the sequence shown below, tighten bolts 1 through 8 through a further 90° using tool 3880105-T0301 or similar to measure the torque-angle.

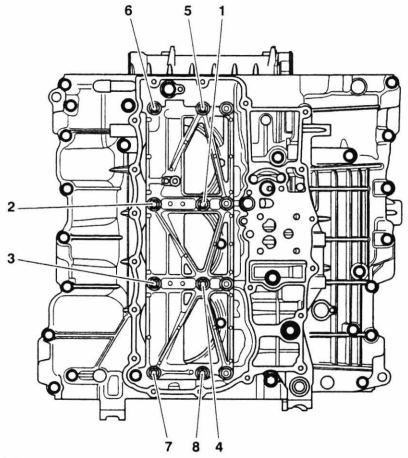

Crankcase Bolt Tightening Sequence, fixings 1-8

Stage 4

In the correct sequence, tighten fixings 9 through 33 to **28 Nm**.

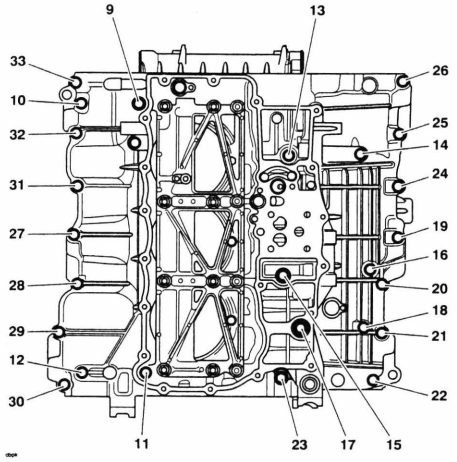

Crankcase Fixing Tightening Sequence, fixings 9-33

All Models

17. Refit the non-return valve to the scavenge oil pump.

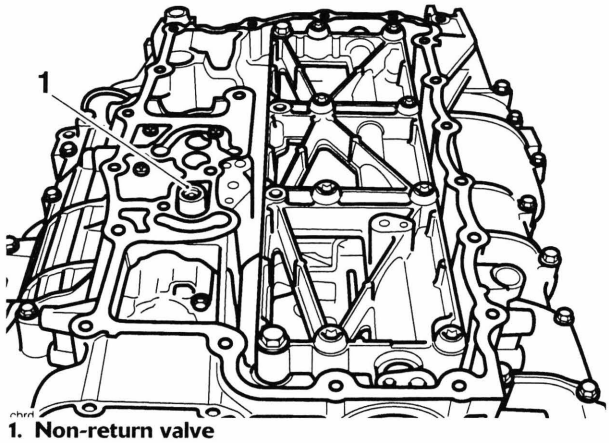

1. Non-return valve

18. Refit the oil pipes to the lower case. Tighten the screws to **9 Nm**.

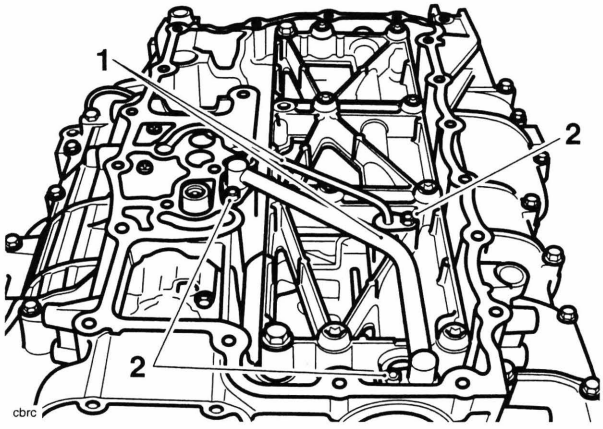

1. Oil pipes
2. Screws

19. Refit the sump (see page *9-11*).
20. Refit the torsional damper (see page *8-17*).
21. Refit the oil pump drive and pressure pump (see page *9-14*).
22. Refit the alternator (see page *18-36*).
23. Refit the starter motor (see page *18-38*).
24. Refit the camshaft drive chain (see page *3-12*).
25. Refit the clutch (see page *4-11*).
26. Refit the engine to the frame (see page *10-5*).

Crankshaft

Removal

1. Remove the engine from the frame (see page *10-2*).
2. Separate the lower and upper crankcases (see page *5-5*).
3. Lift the balancer shaft out of the upper crankcase.

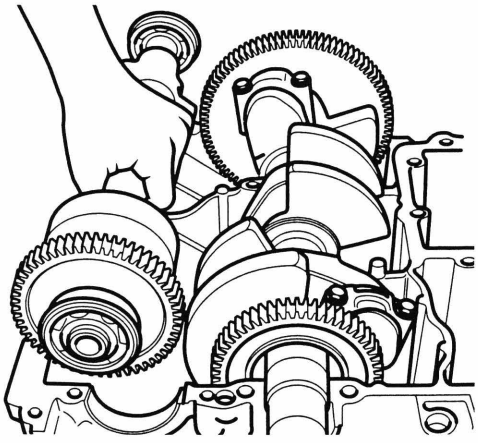

Removing the Balancer Shaft

4. Remove the connecting rod big end caps (see page *5-13*). Discard the bolts after removal.
5. Lift the crankshaft from the upper crankcase. Support the connecting rods during crankshaft removal to prevent damage to the rods, liners and upper crankcase.

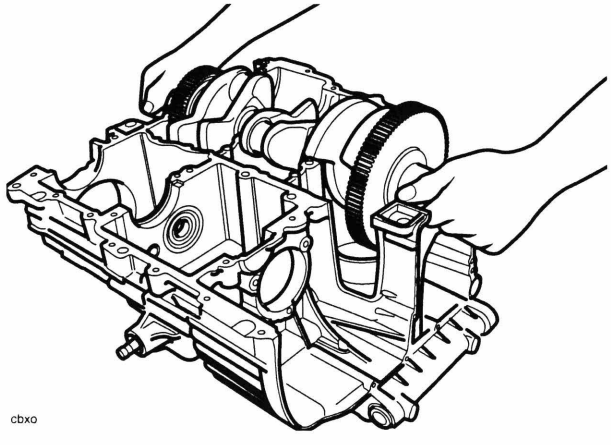

cbxo

Removing the Crankshaft

Installation

Caution

Always check the main bearing journal clearance (see page *5-16*), before final assembly of the crankshaft. Failure to correctly select crankshaft bearings will result in severe engine damage.

Note:

- **Crankshafts and balancer shafts are graded. If the crankshaft is replaced, it must be grade-matched with the balance shaft. For identification, both are marked adjacent to the alignment dots either 'A' or 'B'. Always match an 'A' grade crankshaft with an 'A' grade balancer shaft and vise-versa.**

Note:

- **A 'B' grade component does not indicate inferior quality to an 'A' grade component.**

1. Select and fit new main and big end bearing shells using the selection processes detailed on pages *5-15* and *5-16*.
2. Lubricate all bearings with engine oil.
3. Ensure that the crankshaft is clean, and that the oil ways within the crankshaft are clean and free from blockages and debris.
4. Install the crankshaft ensuring that the crankpins align with the corresponding big ends.

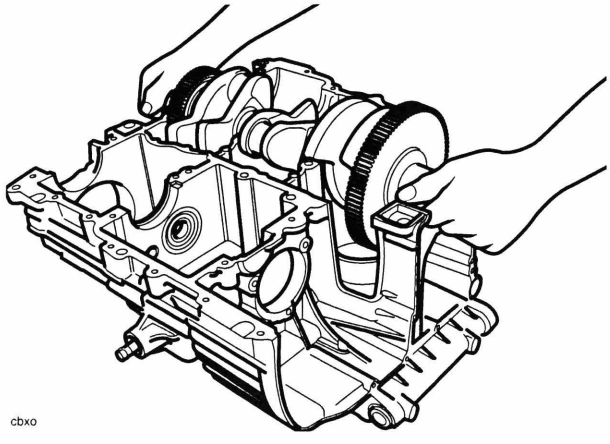

cbxo

Installing the Crankshaft

5. Align the connecting rod big ends to the crankpins.
6. Fit the big end caps and tighten them (see page *5-13* for the tightening sequence and torque).
7. Install the balancer shaft (see page *7-3*).
8. Assemble the crankcases (see page *5-8*).

Connecting Rods

Removal

Note:

- **The connecting rods and cap are etch-marked on one side to identify their correct orientation. However, the cylinder from which they are individually removed should also be identified, using a laundry marker or similar.**

1. Remove the engine from the frame (see page *10-2*).
2. Separate the lower and upper crankcases (see page *5-5*).
3. Remove the cylinder head (see page *3-21*).
4. Remove the connecting rod bolts. Discard the bolts.

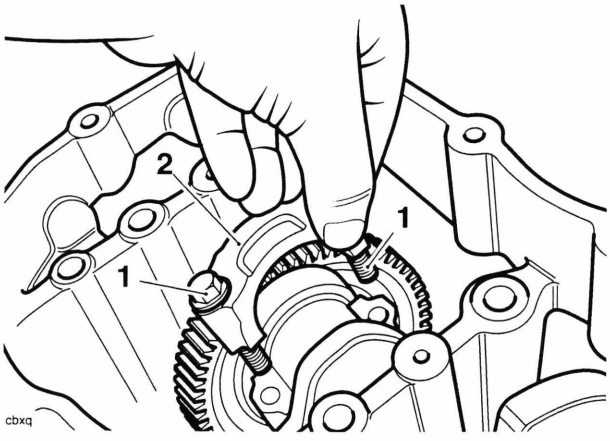

1. Connecting rod bolts
2. Connecting rod cap

5. Collect the big end caps.
6. Push the connecting rod up through the liner and collect the piston and connecting rod from the liner top.
7. Label the assembly to identify the cylinder from which it was removed.
8. Mark the position of each liner in the crankcase to ensure it is re-assembled in its original position.
9. Remove the cylinder liners using tool T3880061, (see page *5-20*).

Installation

Note:

- **Connecting rod bolts and nuts are treated with an anti-rust solution, which must not be removed.**

1. Clean the connecting rod with high flash-point solvent.
2. Select new big end bearings (see page *5-15*).
3. Fit the selected big end shells to the connecting rods and big end caps.
4. Fit the piston and connecting rod assemblies into the liners (see page *5-19*).
5. Thoroughly clean the liner removing all traces of old silicone sealer.
6. Remove all traces of sealer from the crankcase bores.
7. Apply a thin bead of silicone sealer (at the factory, ThreeBond TB1215J is used) to the liner to crankcase mating face.

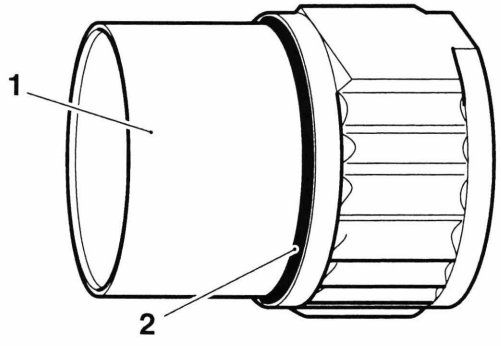

1. Liner
2. Sealer area

8. Fit the liner into the crankcase ensuring that the arrow on the piston faces to the right hand side of the engine/bike (the same side as the exhaust headers).

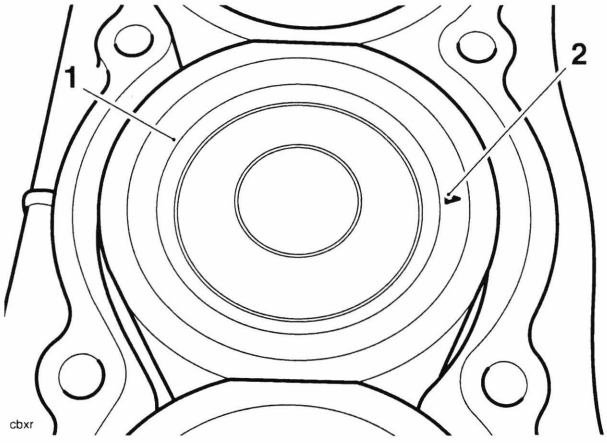

1. Piston
2. Arrow (right hand (exhaust) side)

Note:

- **Ensure that the piston/liner/connecting rod assemblies align correctly with the crankpins during assembly into the crankcase.**

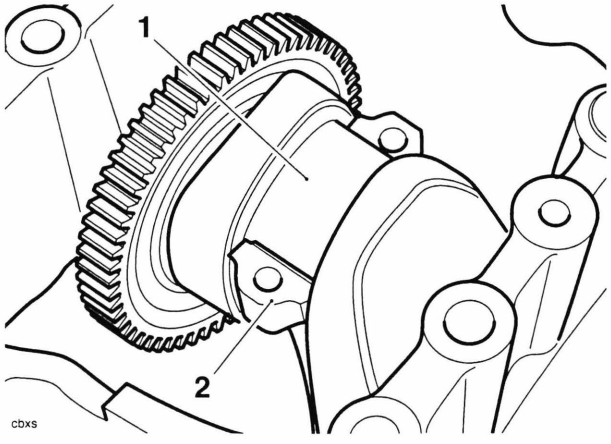

1. Crankpin
2. Big end

Warning

Always renew the big end bolts. The bolts are torqued near to their yield point when first installed and are severely weakened if re-used. Re-using the original bolts may cause bolt breakage resulting in engine damage, loss of motorcycle control and an accident.

9. Align the connecting rod to the crankshaft and fit the big end cap. Tighten the NEW cap bolts as follows:

Warning

The torque characteristics of the connecting rod bolts are sensitive to the rate at which they are tightened. If all the torque is applied in one action, the bolts will be stretched beyond their yield point. This may cause bolt breakage resulting in engine damage, loss of motorcycle control and an accident.

Lubricate the under-head and thread areas of the bolts with undiluted molybdenum disulphide grease. Tighten the bolts, in two stages as follows:

a) Tighten to **14 Nm**.
b) Tighten through 120° of bolt rotation as measured using the Triumph torque turn gauge 3880105-T0301.

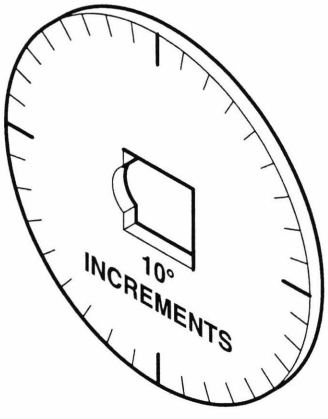

Service Tool 3880105-T0301

10. Refit the cylinder head (see page *3-22*).
11. Assemble the crankcases (see page *5-8*).
12. Refit the engine to frame (see page *10-5*).

Connecting Rod Big End Bearing Selection/Crankpin Wear Check

1. Measure the bearing and crankpin clearance as follows.

Note:

- **The crankpin clearances are measured using Plastigauge (Triumph part number 3880150-T0301). Do not turn the connecting rod and crankshaft during the clearance measurement as this will damage the Plastigauge.**

2. Remove the big end cap from the journal to be checked.
3. Wipe the exposed areas of the crankpin, and the bearing face inside the cap.
4. Apply a thin smear of grease to the journal and a small quantity of silicone release agent to the bearing.
5. Trim a length of the Plastigauge to fit across the journal. Fit the strip to the journal using the grease to hold the Plastigauge in place.
6. Lubricate the threads of the bolt and under-head area with undiluted molybdenum disulphide grease. Refit the bearing and cap and tighten the big end bolts as described earlier.
7. Release the bolts and remove the cap being measured. Using the gauge provided with the Plastigauge kit, measure the width of the compressed Plastigauge.

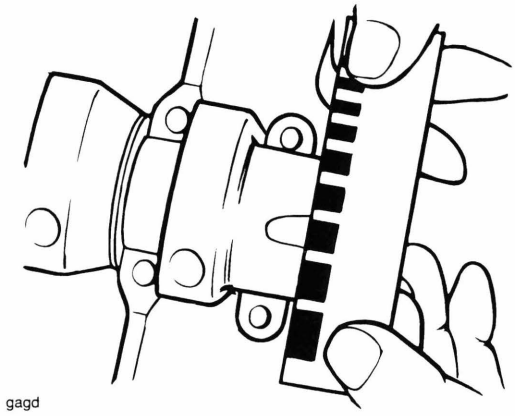

gagd

Checking the Measured Clearance

Con rod big end bearing/crankpin clearance	
Standard	0.065 - 0.035 mm
Service Limit	0.100 mm

Note:

- **If the measured clearance exceeds the service limit, measure the crankpin diameter.**

Crankpin diameter	
Standard	40.968 - 40.982 mm
Service limit	40.922 mm

Note:

- **If any crankpin has worn beyond the service limit, the crankshaft must be replaced. Due to the advanced techniques used during manufacture, the crankshaft cannot be re-ground and oversize bearings are not available.**

Connecting Rod Bearing Selection

Note:

- **Optimum running clearance is achieved by using selective big end bearings. For further information on bearing part number to colour cross-references, refer to the parts information system.**

Select the correct big end bearing shell as follows:

1. Measure each crankpin diameter.
2. Select the correct bearings by matching the information found with the chart below.

Big End Bearing Selection Chart

Shell Colour	White	Red
Crankpin diameter	40.982 to 40.976	40.975 to 40.968

For instance:

Crankpin diameter	40.978
Required Bearing	White

Note:

- **Repeat the measurements for all connecting rods and their respective crankpins. It is normal for the bearings selected to differ from one connecting rod to another.**

⚠ Warning

Always confirm, using the Plastigauge method, that the running clearance is correct before final assembly. Severe engine damage could result from incorrect clearance, resulting in loss of motorcycle control and an accident.

Crankshaft Main Bearing/Journal Wear

Using selective bearings compensates for minor differences in crankshaft main bearing journal and crankcase dimensions. For further information on bearing part number to colour cross-references, refer to the parts information system.

1. Measure the bearing to crankshaft main journal clearance using Plastigauge (Triumph part number 3880150-T0301). Use the same method as described in connecting rod clearance measurement (see page *5-15*).

Checking Crankshaft Clearance using Plastigauge

Crankshaft main bearing/journal clearance	
Standard	0.018 - 0.041 mm
Service limit	0.100 mm

2. If the clearance exceeds the service limit, measure the diameter of the crankshaft main bearing journal.

Crankshaft main bearing journal diameter	
Standard	43.092 - 43.108 mm
Service limit	43.068 mm

Note:

- **If any journal has worn beyond the service limit, the crankshaft must be replaced. Due to the techniques used during manufacture, the crankshaft cannot be re-ground and oversize bearings are not available.**

Select bearings as follows:

1. Measure and record the diameter of each crankshaft main bearing journal.
2. Measure and record each main bearing bore diameter in the crankcase (bearings removed but all crankcase bolts fully torqued) (see page *5-9*).

Note:

- **The original crankcase bolts may be reused for bearing selection. Do not use new bolts as they may only be used once, even if the single use is related to bearing selection.**

Compare the data found with the chart below to select bearings individually by journal.

Shell Colour	Crankcase Bore	Crankshaft Journal Diameter	Running Clearance
White	46.105 to 46.097	43.108 to 43.100	0.040 0.018
Red	46.105 to 46.097	43.099 to 43.092	0.040 0.019
Red	46.114 to 46.106	43.108 to 43.100	0.041 0.019
Blue	46.114 to 46.106	43.099 to 43.092	0.041 0.020
Blue	46.123 to 46.115	43.108 to 43.100	0.042 0.020
Green	46.123 to 46.115	43.099 to 43.092	0.042 0.021

For example:

Crankcase Bore	46.099 mm
Crankshaft Journal diameter	43.095 mm
Bearing Required	RED

Note:

- **It is normal for the bearings selected to differ from one journal to another.**

It is also normal for there to be two options of bearing shell colour. In such cases, pick the shell size that gives the greater running clearance.

Warning

Always confirm, using the Plastigauge method, that the running clearance is correct before final assembly. Severe engine damage could result from incorrect clearance resulting in loss of motorcycle control and an accident.

Crankshaft End Float

Crankshaft end float	
Standard	0.05 – 0.20 mm
Service limit	0.40 mm

Note:

- **Crankshaft end float is controlled by the tolerances in crankshaft and crankcase machining. Thrust washers are not used. If crankshaft end float is outside the specified limit, the crankshaft and/or the crankcases must be replaced.**

Pistons

Disassembly

1. Remove the cylinder head and liners (see page *3-21*).

> **⚠ Caution**
>
> The cylinder liners and pistons are made of aluminium alloy and can therefore be easily damaged. Handle the cylinder liner and piston with care, ensuring the internal bore of the liner and the piston skirt are not scratched.

Note:

- **It is not necessary to remove the connecting rods from the crankshaft, but the piston should be at the top of its stroke.**

2. Remove the gudgeon pin circlip from one side of the piston.

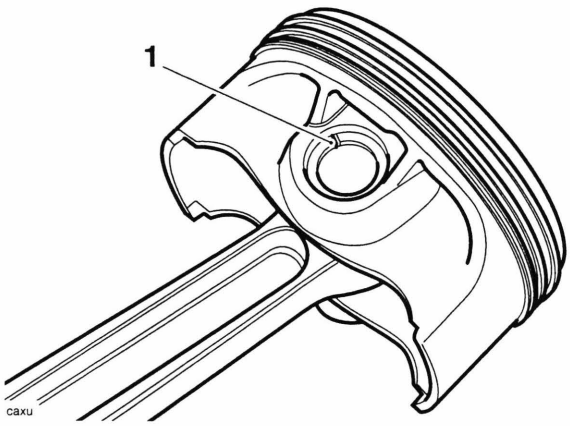

1. Gudgeon pin circlip

3. Remove the gudgeon pin by pushing the pin through the piston and rod toward the side from which the circlip was removed.

Note:

- **If the gudgeon pin is found to be tight in the piston, check the piston for a witness mark caused by the circlip. Carefully remove the mark to allow the pin to be removed.**

4. With the gudgeon pin removed, the piston can be detached from the con-rod.
5. Remove the piston rings.

Note:

- **The rings may be removed using a proprietary piston ring expander tool or, if a tool is not available, carefully spread the ring opening using thumb pressure then push up on the opposite side of the ring to remove it from the piston.**

Piston Wear Check

1. Measure the piston outside diameter, 10 mm up from the bottom of the piston and at 90° to the direction of the gudgeon pin.

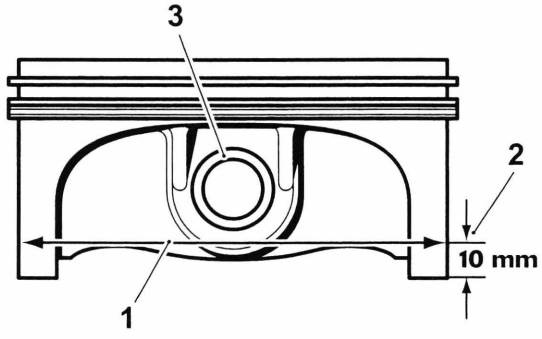

1. Piston outside diameter
2. Measurement point (10 mm up the piston skirt)
3. Gudgeon pin

Piston outside diameter at 90° to gudgeon pin	
All cylinders	101.561 - 101.577 mm
Service limit	101.511 mm

Replace the piston if the measured diameter falls outside the specified limit.

Piston Rings/Ring Grooves

1. Check the pistons for uneven groove wear by visually inspecting the ring grooves.
2. Clean the piston ring grooves.
3. Fit the piston rings to the pistons. Check, using feeler gauges, for the correct clearance between the ring grooves and the rings. Replace the piston and rings if outside the specified limit.

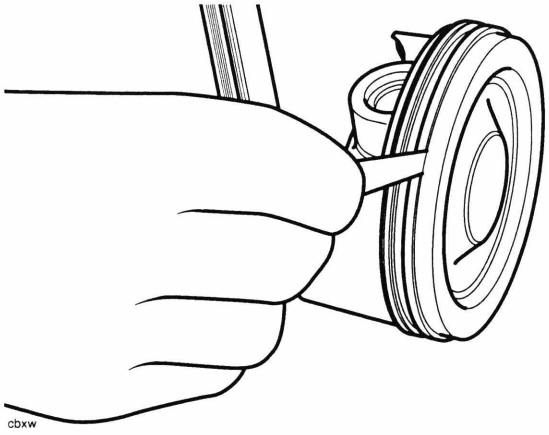

Checking Piston Ring to Groove Clearances

Piston ring/groove clearance	
Top - standard	0.02 - 0.06 mm
Top - service limit	0.16 mm
Second - standard	0.02 - 0.06 mm
Second - service limit	0.16 mm

Piston Ring Gap

Note:

- **Before final assembly the piston ring gap, when fitted in the liner, must first be checked.**

1. Place the piston ring inside the liner.
2. Push the ring into the top of the cylinder, using the piston to hold the ring square with the inside of the bore. Continue to push the ring into the bore until the third groove of the piston is level with the top of the liner around its full circumference.

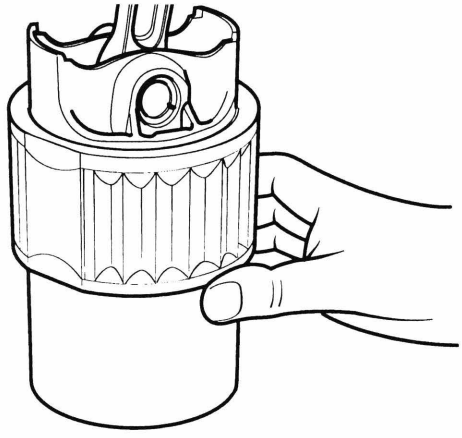

Aligning Piston Rings using the Piston

3. Remove the piston and measure the gap between the ends of the piston ring using feeler gauges.

Piston ring end gap tolerances	
Top - standard	0.20 - 0.35 mm
Top - service limit	0.55 mm
Second - standard	0.30 - 0.50 mm
Second - service limit	0.675 mm
Oil control - standard	0.20 - 0.70 mm
Oil control - service limit	0.875 mm

Note:

- **If the end gap is too large, replace the piston rings with a new set.**
- **If the gap remains too large with new piston rings, both the pistons and barrels must be replaced.**
- **If the gap is too small, check the cylinder bore for distortion, replacing as necessary. DO NOT FILE PISTON RINGS!**

Piston Assembly

1. Clean the piston ring grooves and fit the piston rings to the piston.

Note:

- **The top ring upper surface is marked 'N' and can be identified by a chamfer on the inside edge.**

  The second ring upper surface is marked '2N' but is plain on the inside edge and has a bronze appearance.

  All oil control rings can be fitted with either face upward.

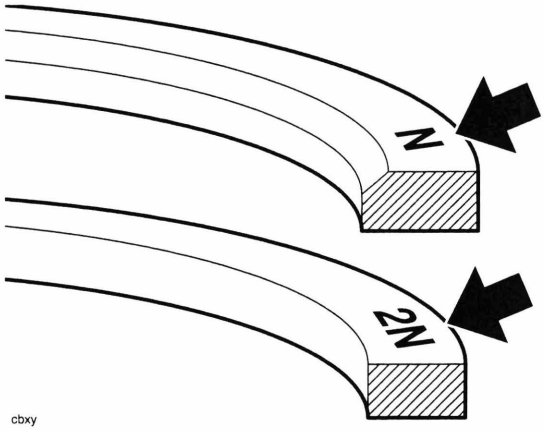

Piston Ring Identification Marks

2. Install a new circlip to one side of the piston.
3. Locate the piston to the connecting rod ensuring that the piston direction arrow points to the right hand (exhaust) side of the engine.

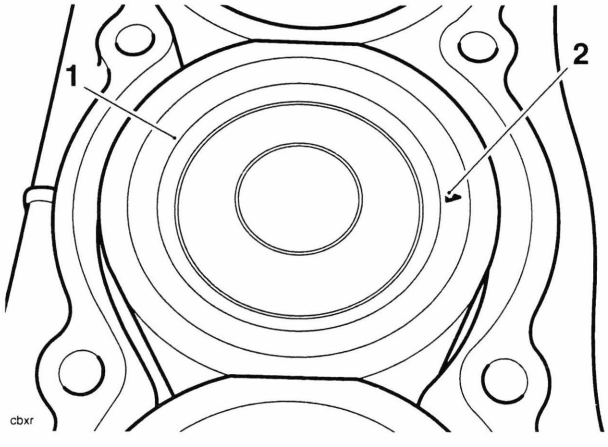

1. Piston
2. Direction arrow

4. Align the small end in the connecting rod with the gudgeon pin hole in the piston.
5. Lubricate the piston, small end and gudgeon pin with clean engine oil and fit the gudgeon pin from the opposite side to the installed circlip.
6. Fit a new circlip to the remaining location in the piston then check that both are correctly installed. Rectify if necessary.

Warning

Re-using the original circlips may cause gudgeon pin detachment resulting in engine seizure, loss of motorcycle control and an accident.

7. The piston ring gaps must be arranged as shown in the diagram below.

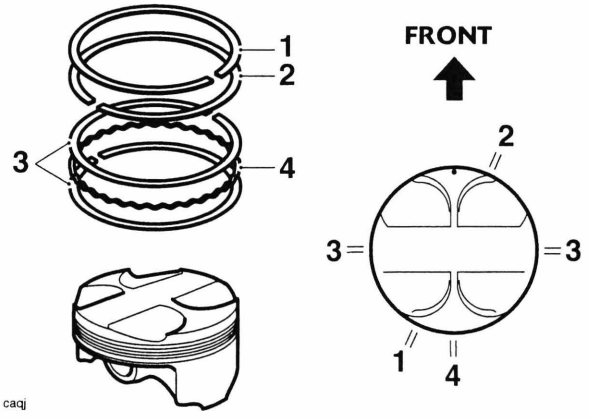

1. Top ring
2. Second ring
3. Steel oil control rings
4. Oil Control Ring Expander

Note:

- **The top ring gap should be positioned in the 7 o'clock position, the second ring gap in the 1 o'clock position and the steel oil control ring gaps in the 9 & 3 o'clock positions (one in each position).**

8. Fit the piston into the bottom of the liner using a gentle rocking motion to engage the rings in the bore.

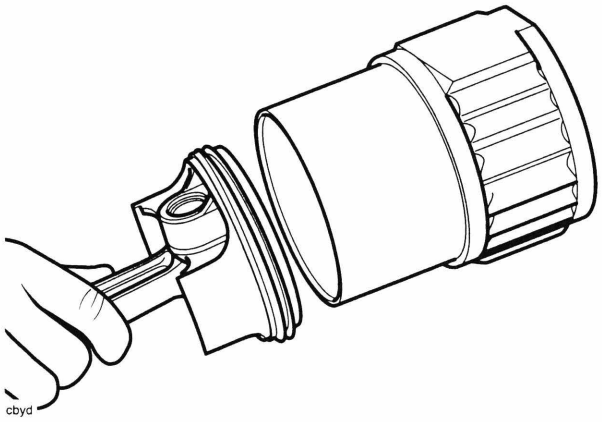

Fitting a Piston into a Liner

Cylinder Wear

1. Measure the internal diameter of each cylinder liner using an internal micrometer or Mercer gauge. Always check in two places, at 90° to each each other, as well as at three heights in the liner.

Cylinder liner internal diameter	
Standard	101.591 – 1.609 mm
Service limit	101.659 mm

Check the diameter at points 1, 2 and 3.

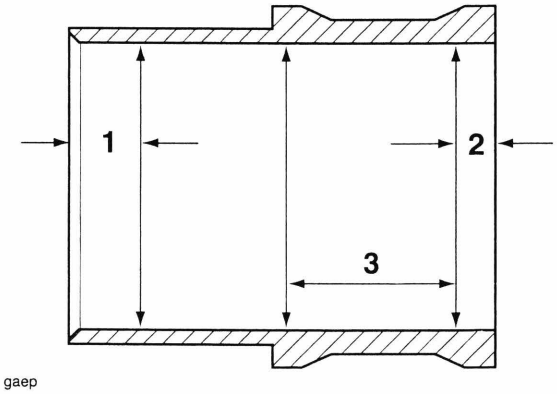

Checking Positions For Bore Wear Check (bore shown in section)

2. If any reading is outside the specified limits, replace the liner and piston as an assembly.

Cylinder Liners

Removal

1. Mark each liner to identify correct orientation and the cylinder number from which it has been removed.
2. Turn the crankshaft until the piston in the liner to be removed is at the bottom of its stroke.
3. Check that the locking nut on tool T3880061 is loose, then fully unscrew the extraction nut.

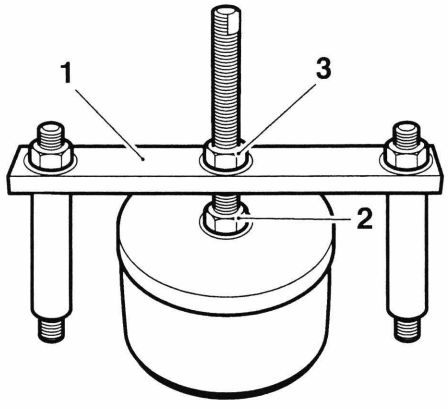

1. Tool T3880061
2. Locking nut
3. Extraction nut

⚠ Caution

The cylinder liners and pistons are made of aluminium alloy and can therefore be easily damaged. Handle the cylinder liner and piston with care, ensuring the internal bore of the liner and the piston skirt are not scratched.

4. Carefully fit the rubber section of the tool fully into the cylinder liner, positioning studs supplied with the tool diagonally across a pair of head bolt-holes.

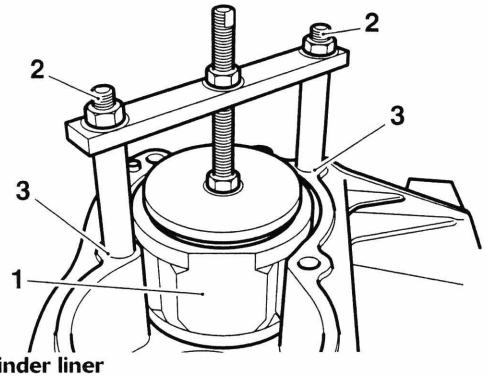

1. Cylinder liner
2. Studs
3. Head-bolt holes

5. Fully engage the bolt threads in the head bolt holes. It is not necessary to fully tighten the bolts.
6. Turn the locking nut clockwise until the rubber sleeve on the tool tightly grips the bore of the liner.
7. Turn the extraction nut clockwise sufficient to raise the liner and break the seal between the liner and crankcase.

Note:

- **It is not necessary (or possible) to fully extract the liner using this tool. Once the seal is broken, the tool must be removed and the liner extracted by hand.**

8. Turn the locking nut anti clockwise to release the liner.
9. Once the seal on the liner is released, remove the tool and manually remove the liner.

Installation

1. Thoroughly clean the liner removing all traces of old silicone sealer.
2. Remove all traces of sealer from the crankcase bores.
3. Apply a thin bead of silicone sealer (at the factory, ThreeBond TB1215J is used) to the liner to crankcase mating face.

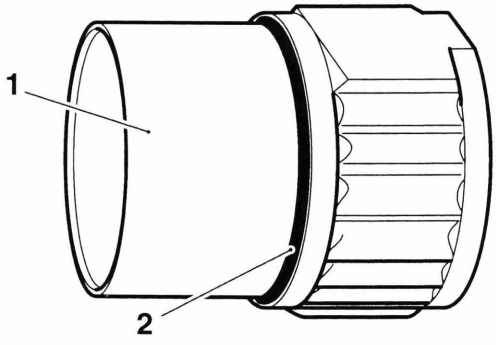

cbyc

1. Liner
2. Sealer area

4. Carefully fit each liner over the piston using a gentle rocking motion to allow compression of the piston rings.

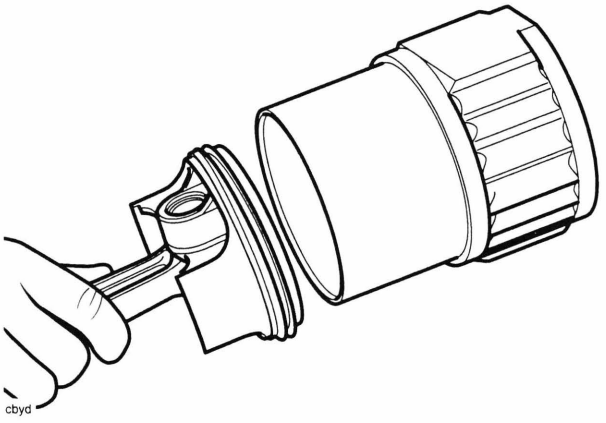

cbyd

Fitting a Piston into a Liner

⚠ Caution

Care must be taken when installing liners such that the silicone sealer is not forced out, blocking passageways in the crankcase.

Note:

- **The liners have a large chamfer at the bottom of the bore, enabling fitting of the piston without the need for a piston ring compressor.**

⚠ Caution

Fit each liner over whichever piston is at TDC. When turning the engine, do not allow the pistons to contact the inside of the crankcase and also do not allow fitted liners to lift off the crankcase base.

5. Continue fitting each liner in turn until all are fitted and sealed.

Note:

- **When the liners have been fitted, they should not be disturbed. If it is necessary to remove the liner after fitting, the sealer must be re-applied.**

This page intentionally left blank

6 Bevel Box and Drive Shaft

Table of Contents

Sectioned View - Bevel Box And Drive Shaft. 6.2

Bevel Box and Drive Shaft Specification. 6.3

Bevel Box Oil Specification 6.3

Bevel Box Oil Level check 6.4

Bevel Box Oil Change. 6.4

Bevel Box 6.5

- Removal 6.5
- Installation. 6.5

Drive Shaft 6.5

Sectioned View - Bevel Box And Drive Shaft

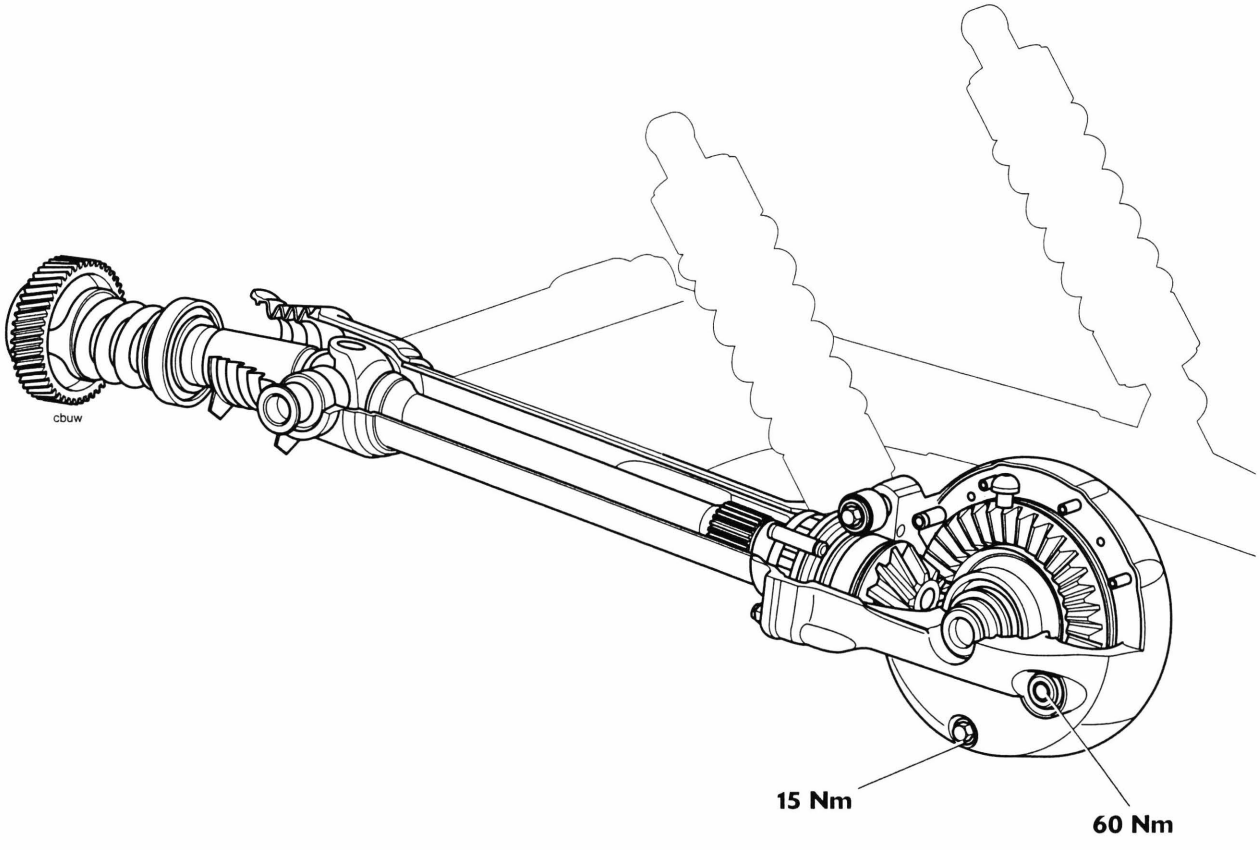

Bevel Box and Drive Shaft Specification

The Rocket III is fitted with a shaft drive coupling the transmission to the bevel box at the rear wheel. The drive shaft is fitted with a single Hookes universal joint which requires no maintenance.

The bevel box consists of a crown wheel and pinion arrangement that has no dealer serviceable parts. Maintenance consists solely of routine oil level checks and oil changes.

⚠ Warning

Under no circumstances should the final drive unit be disassembled. Failure to observe the above warning could lead to a malfunction of the final drive unit causing lock-up of the rear wheel leading to loss of motorcycle control and an accident.

Bevel Box Oil Specification

The bevel box must be filled and topped up with 75W/90 fully synthetic hypoid oil that meets specification API Service Level GL5, such as Castrol SAF-XO fully synthetic hypoid oil or equivalent.

⚠ Warning

Use of an incorrect bevel box lubricant could result in a malfunction of the final drive unit causing lock-up of the rear wheel leading to loss of motorcycle control and an accident.

Bevel Box Oil Level check

Warning

Before starting work, ensure the motorcycle is stabilised and adequately supported. This will help prevent it from falling and causing injury to the operator or damage to the motorcycle.

1. Have an assistant stand the bike upright.
2. Remove the filler/level plug.

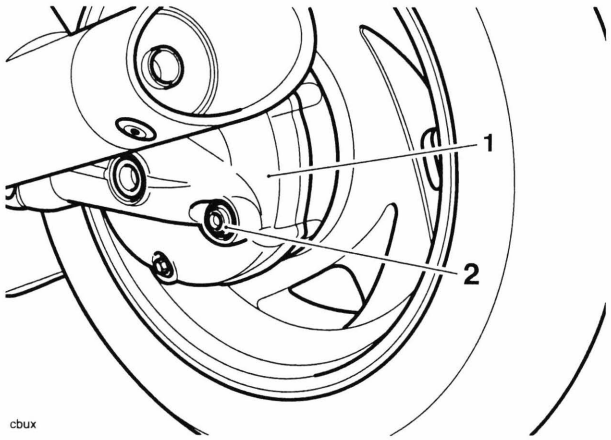

1. Bevel box
2. Filler/level plug

3. Fill the bevel box with 75W/90 fully synthetic hypoid oil that meets specification API Service Level GL5, such as Castrol SAF-XO fully synthetic hypoid oil (or equivalent) until the level of oil inside the unit is level with the bottom of the filler.
4. Refit the plug and tighten to **60 Nm**.

Bevel Box Oil Change

Warning

Before starting work, ensure the motorcycle is stabilised and adequately supported. This will help prevent it from falling and causing injury to the operator or damage to the motorcycle.

1. Position a container beneath the bevel box drain plug.

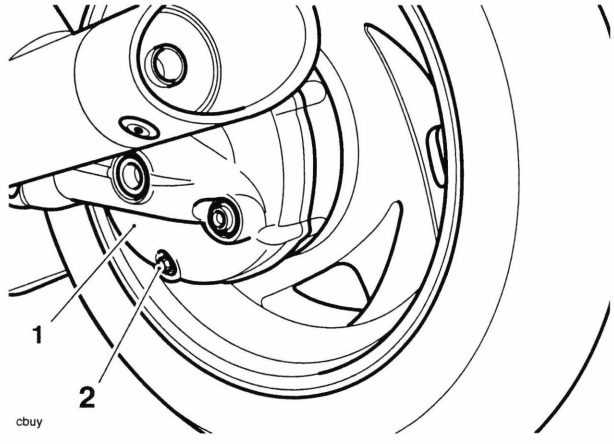

1. Bevel box
2. Drain plug

2. Remove the drain plug and allow the oil to fully drain out.
3. Wipe the drain plug clean then refit and tighten it to **15 Nm**.

Note:

- **The drain plug is magnetic. It is normal for metallic deposits to be attached to the drain plug magnet.**

4. Remove the filler plug.
5. Have an assistant stand the bike upright during filling.
6. Fill the bevel box with 75W/90 fully synthetic hypoid oil that meets specification API Service Level GL5, such as Castrol SAF-XO fully synthetic hypoid oil (or equivalent) until the level of oil inside the unit is level with the bottom of the filler.
7. Refit the plug and tighten to **60 Nm**.

Bevel Box

Removal

Warning

Before starting work, ensure the motorcycle is stabilised and adequately supported. This will help prevent it from falling and causing injury to the operator or damage to the motorcycle.

1. Support the motorcycle so that the rear wheel is clear of the ground.
2. Remove the rear wheel (see page *16-13* for Rocket III and Classic, see page *16-15* for Rocket III Touring).
3. Remove the left hand rear suspension unit (see page *14-5*).
4. Release the four nuts securing the bevel box to the swinging arm.
5. Ease the bevel box towards the rear of the motorcycle, detaching the pinion coupler from the drive shaft.

Installation

Note:

- **Prior to installation, check that the drive shaft is supported by the sleeve inside the swinging arm. Rectify as necessary.**

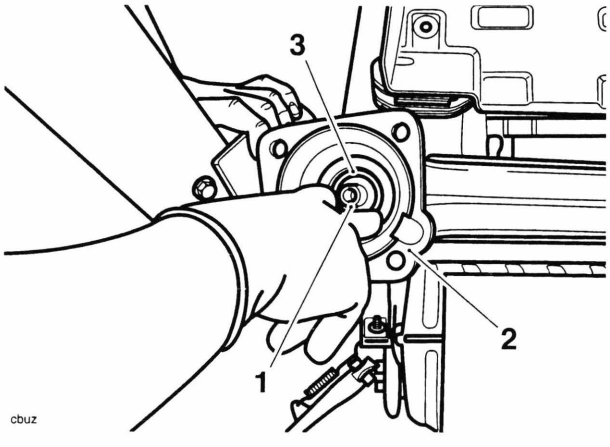

1. **Drive shaft**
2. **Swinging arm**
3. **Sleeve**

1. Apply a smear of molybdenum disulphide grease to the drive shaft splines and wheel driven flange.
2. Position the bevel box to the drive shaft engaging the pinion coupler and drive shaft at the same time.

Note:

- **Before tightening the bevel box nuts, fully insert the wheel spindle through the swinging arm to ensure it will realign with the swinging arm when the wheel is installed.**

Note:

- **Bevel box to swinging arm fixings are tightened in two stages and in a specific sequence. Tighten all fixings to the lower torque before progressing to the higher figure.**

3. Align the bevel box by fully inserting the wheel spindle through the bevel box and swinging arm.
4. In the order shown below, tighten all the bevel box nuts to **20 Nm**, then to **64 Nm**.

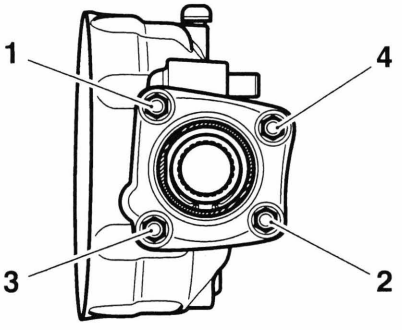

Bevel Box Bolt Tightening Sequence

5. Refit the left hand rear suspension unit (see page *14-6*).
6. Refit the rear wheel (see page *16-14* for Rocket III and Classic, see page *16-17* for Rocket III Touring).
7. Lower the motorcycle to the ground and park it on the side stand.
8. Check and top up the bevel box oil level (see page *6-4*).

Drive Shaft

Drive shaft details can be found in the Rear Suspension section on page *14-6*.

This page intentionally left blank

7 Balancer

Table of Contents

Exploded View - Balancer. 7.2

Introduction 7.3

- Removal 7.3
- Inspection 7.3
- Assembly/Installation. 7.3

Exploded View - Balancer

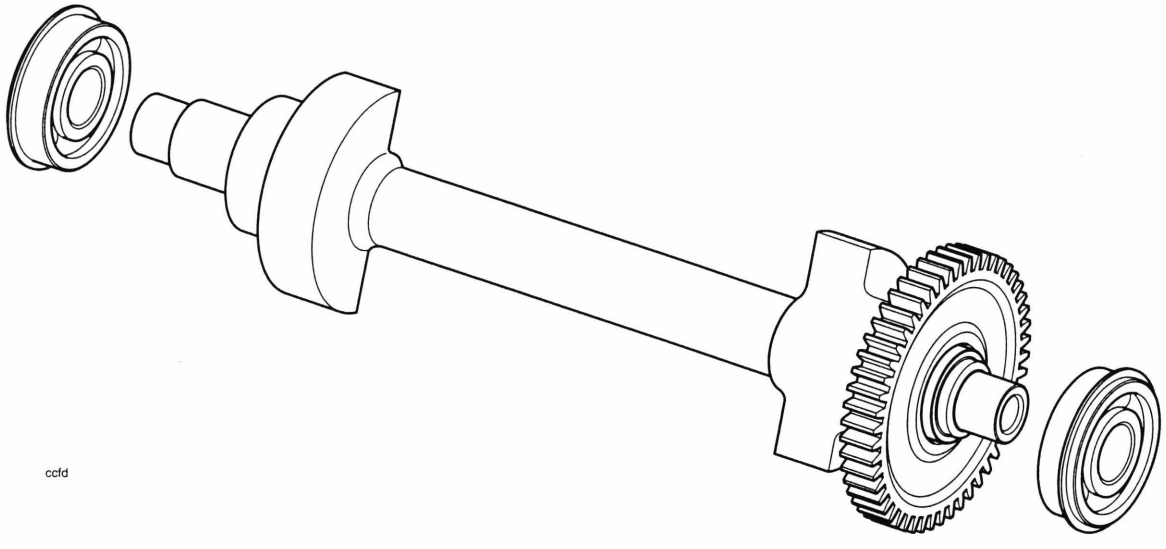

ccfd

Introduction

In an engine with an even number of cylinders (i.e. 2, 4, 6, etc.), a piston on an upward stroke is always counter-balanced by one on a descending stroke. However, in an engine with an odd number of cylinders, such as that fitted to the Rocket III, this natural state of balance does not occur. Therefore a balancer is fitted to the engine in order to control irregular pulses caused by the odd number of cylinders. Without a balancer, the engine would 'pulse' each time the crankshaft rotated. This 'pulsing' would be felt as a vibration which would amplify as engine speed increases.

The balancer has the effect of a pair of counterbalance weights, which create an equal amount of energy in the opposite direction, and at the same time as that produced by the crankshaft, pistons and connecting rods. Because the opposing pulses occur at the same point of crankshaft rotation, and are of an equal magnitude, a state of equilibrium or balance is reached.

Removal

Warning

Before starting work, ensure the motorcycle is stabilised and adequately supported. This will help prevent it from falling and causing injury to the operator or damage to the motorcycle.

1. Remove the engine (see page *10-2*).
2. Separate the crankcase halves (see page *5-5*).
3. With the crankcase halves separated, lift out the balancer shaft complete with the bearings.

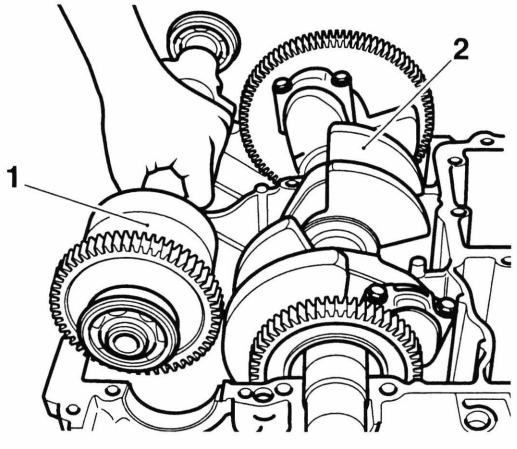

cbrf

1. Balancer
2. Crankshaft

4. If necessary, slide off the ball bearing at the end opposite to the drive gear.

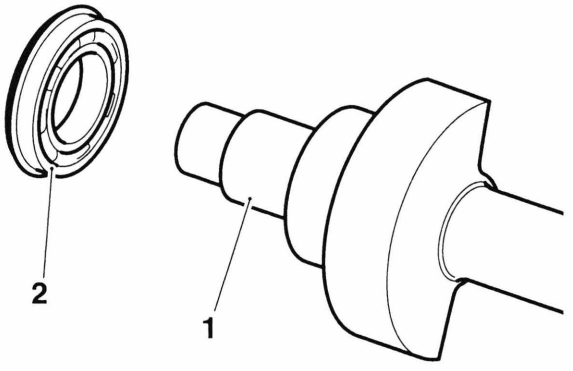

cbrg

1. Balancer
2. Bearing

Note:

- **The bearing at the gear end can only be removed in a press.**

Inspection

1. Inspect all gears for chipped or missing teeth and for overheating (blue discolouration).
2. Inspect all bearings for signs of overheating (blue discolouration), seizure and any other damage. Check that all bearings rotate smoothly and without tight spots.

Assembly/Installation

Note:

- **Balancer shafts and crankshafts are graded. If the balancer shaft is replaced, it must be grade-matched with the crankshaft. For identification, both are marked adjacent to the alignment dots (see note below) either 'A' or 'B'. Always match an 'A' grade crankshaft with an 'A' grade balancer shaft and vice-versa.**

Note:

- **A 'B' grade component does not indicate inferior quality to an 'A' grade component.**

Note:

- **To ensure a correct relationship, the balancer must be installed in a specific orientation relative to the crankshaft. There are dot marks, one on the balancer drive gear (on the crankshaft) and one on the balancer driven gear, which must be in alignment when the balancer shaft is fitted.**

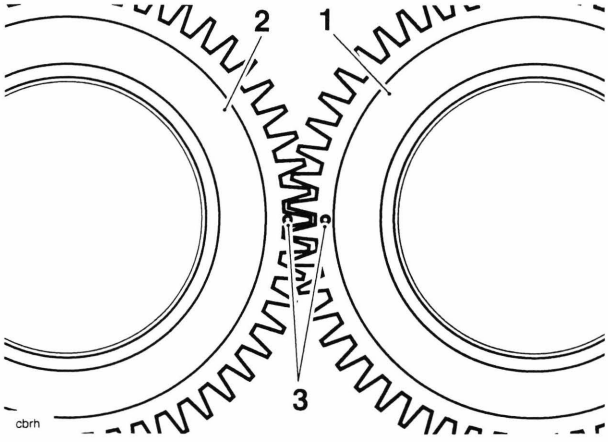

1. **Balancer drive gear**
2. **Balancer driven gear**
3. **Dot marks**

Note:

- **A further alignment check can be made if required. When number one cylinder in the engine is on top-dead-centre (TDC), slots on the end of the balancer will align with the split line of the crankcase. This allows a balancer installation check on an installed engine by removing only the clutch cover.**

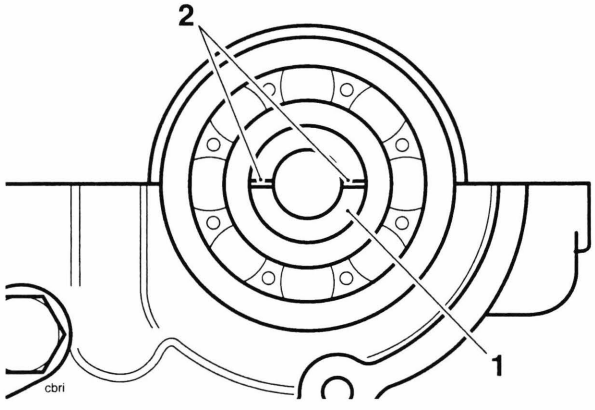

1. **Balancer shaft**
2. **Slot marks**

1. Position the balancer to the upper crankcase aligning the dot marks as shown below.

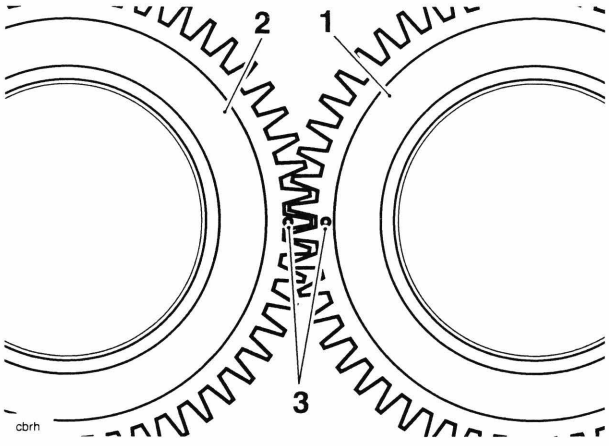

1. Balancer drive gear
2. Balancer driven gear
3. Dot marks

2. Position the balancer bearings such that the dowel pegs locate in the slots in the upper crankcase.

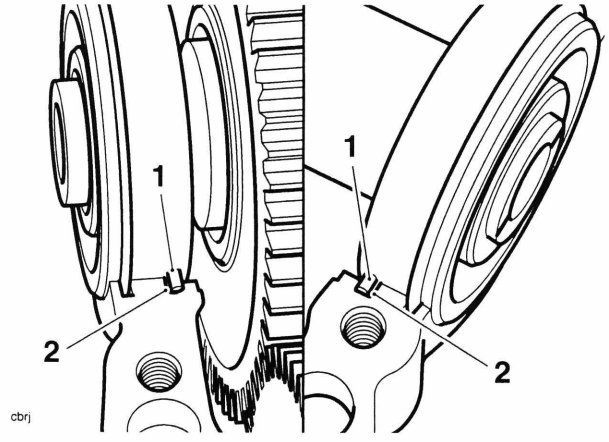

1. Bearing dowels
2. Upper crankcase slots

3. Ensure the circlips fitted to the balancer bearings locate and seat correctly in corresponding grooves, also in the upper crankcase.

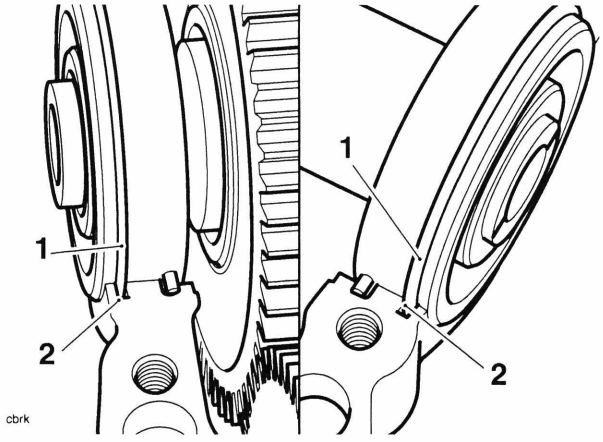

1. Circlips
2. Grooves

4. Check that the balancer and crank dot marks are still in alignment.
5. Assemble the crankcase halves (see page *5-8*).
6. Refit the engine to the frame (see page *10-5*).

This page intentionally left blank

8 Transmission

Table of Contents

Exploded View - Input and Output Shafts - Up to Engine Number 300895 ..... 8.2

Exploded View - Input and Output Shafts - From Engine Number 300896 ..... 8.3

Exploded View - Gear Change Mechanism 8.4

Exploded View - Gear Selector Mechanism - Rocket III and Classic 8.5

Exploded View - Gear Selector Mechanism - Rocket III Touring 8.5

Exploded View - Gear Selector Mechanism - Rocket III Roadster 8.6

Exploded View - Torsional Damper Shaft Housing 8.7

Exploded View - Torsional Damper Shaft 8.7

Selector Shaft, Selector Forks and Drum 8.8

- Removal 8.8
- Inspection 8.10
- Installation 8.10

Torsional Damper Shaft 8.12

- Removal 8.12
- Disassembly 8.12
- Assembly 8.15
- Installation 8.17

Input and Output Shaft Assemblies 8.18

- Removal 8.18
- Installation 8.19

Output Shaft - Up to Engine Number 300895 ..... 8.20

- Disassembly 8.21
- Inspection 8.21
- Assembly 8.22

Output Shaft - From Engine Number 300896 ..... 8.24

- Disassembly 8.25
- Inspection 8.25
- Assembly 8.26

Input Shaft 8.28

- Disassembly 8.29
- Inspection 8.30
- Assembly 8.30

Exploded View - Input and Output Shafts - Up to Engine Number 300895

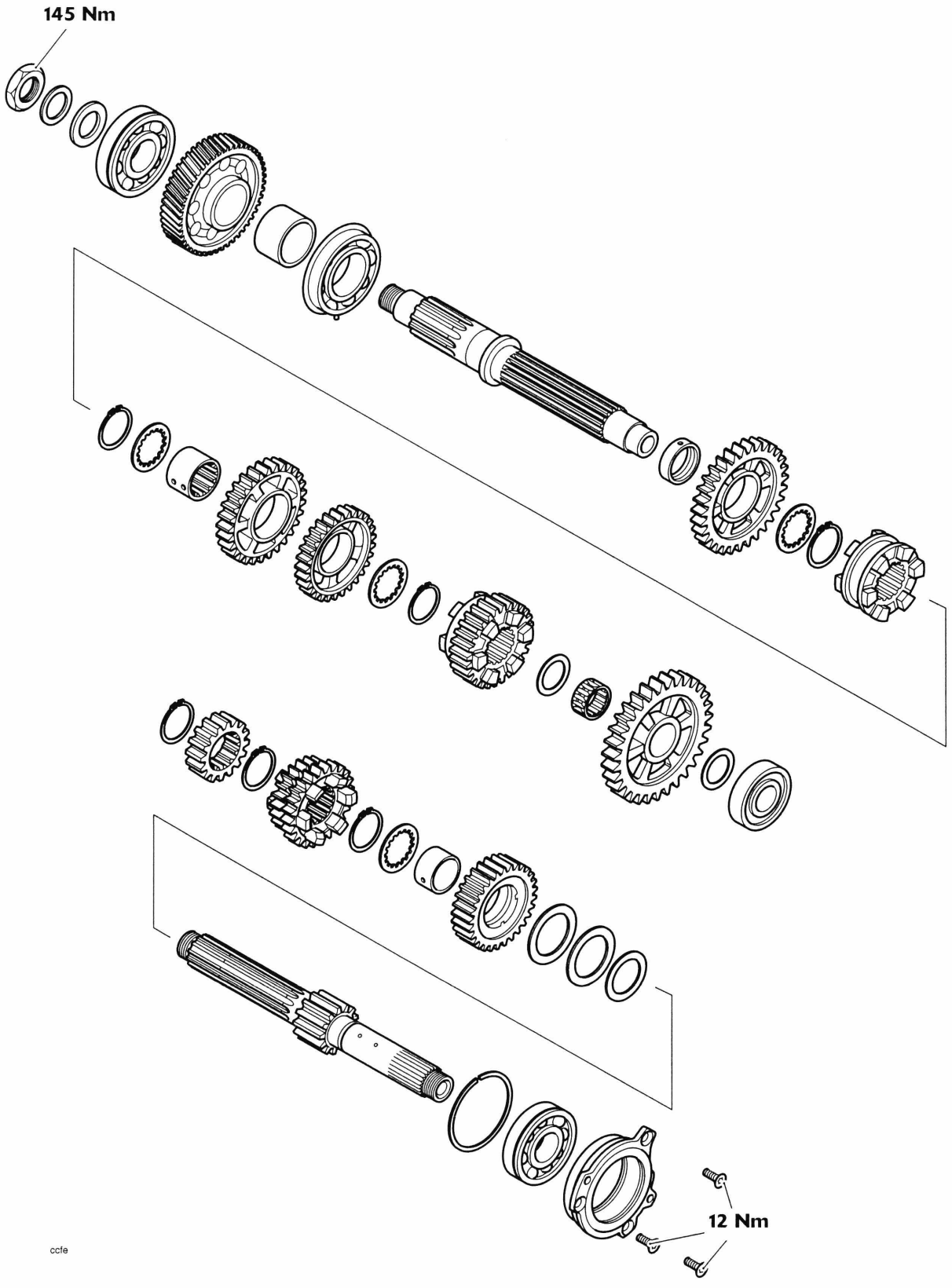

Exploded View - Input and Output Shafts - From Engine Number 300896

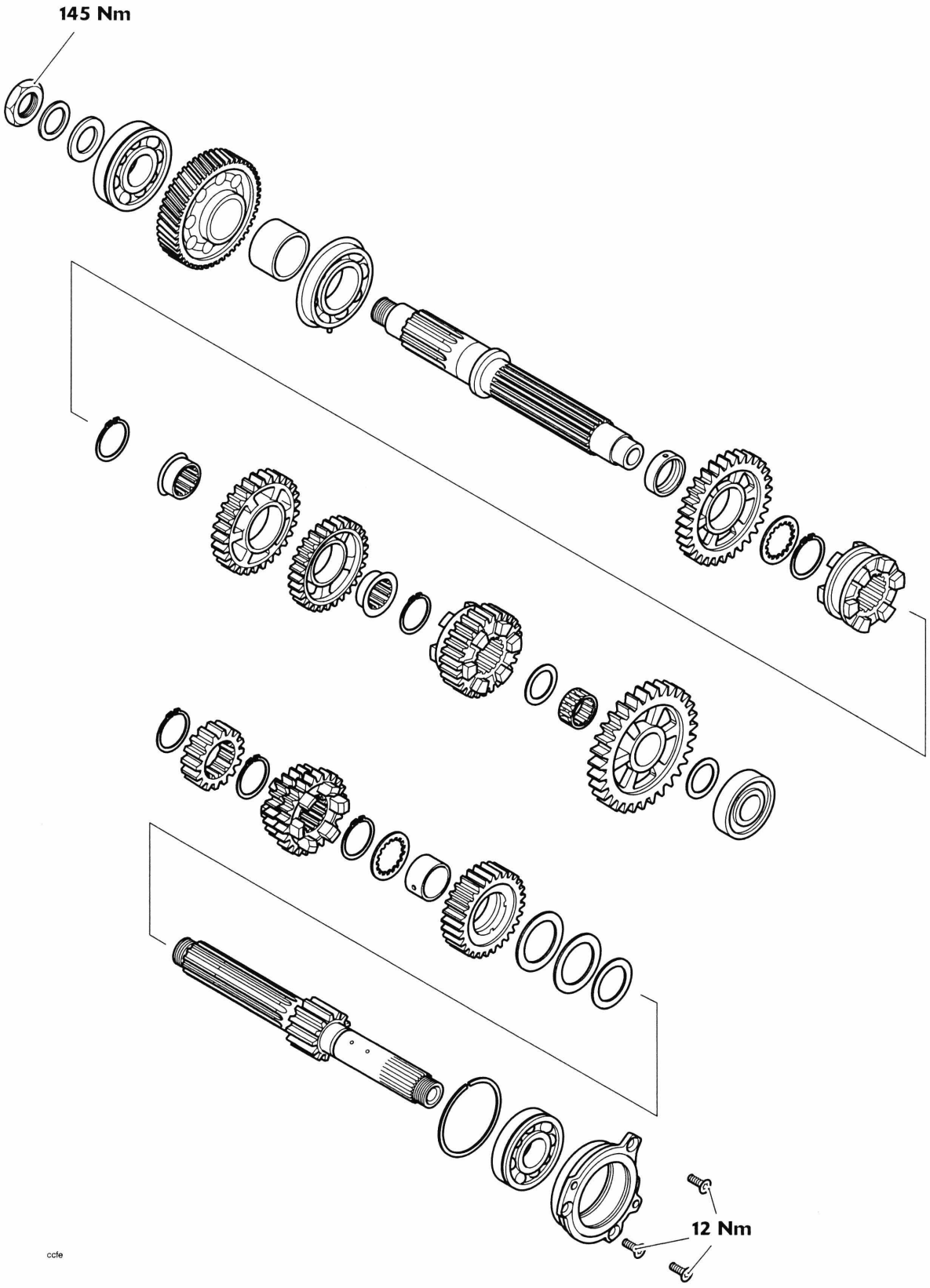

Exploded View - Gear Change Mechanism

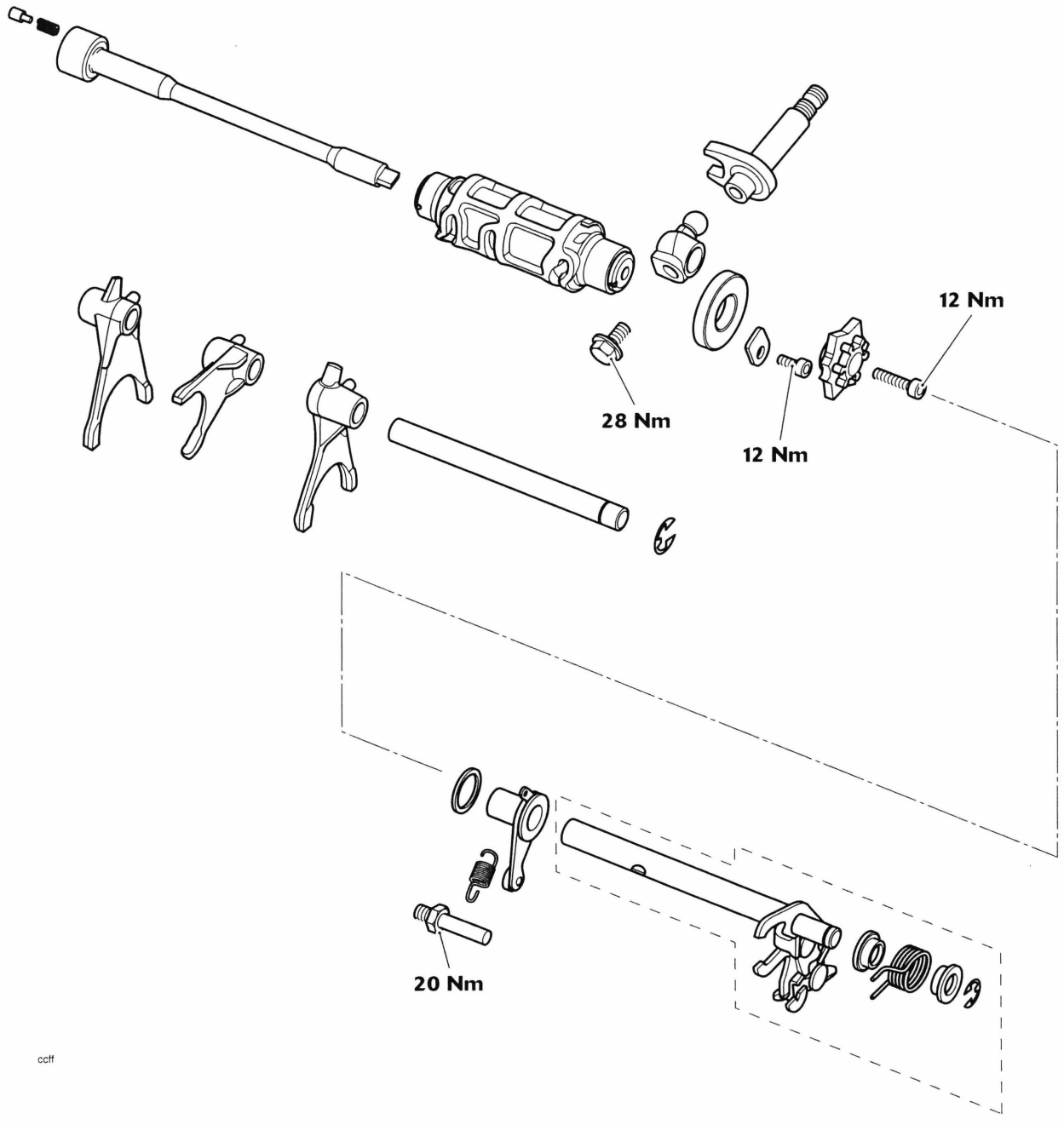

Exploded View - Gear Selector Mechanism - Rocket III and Classic

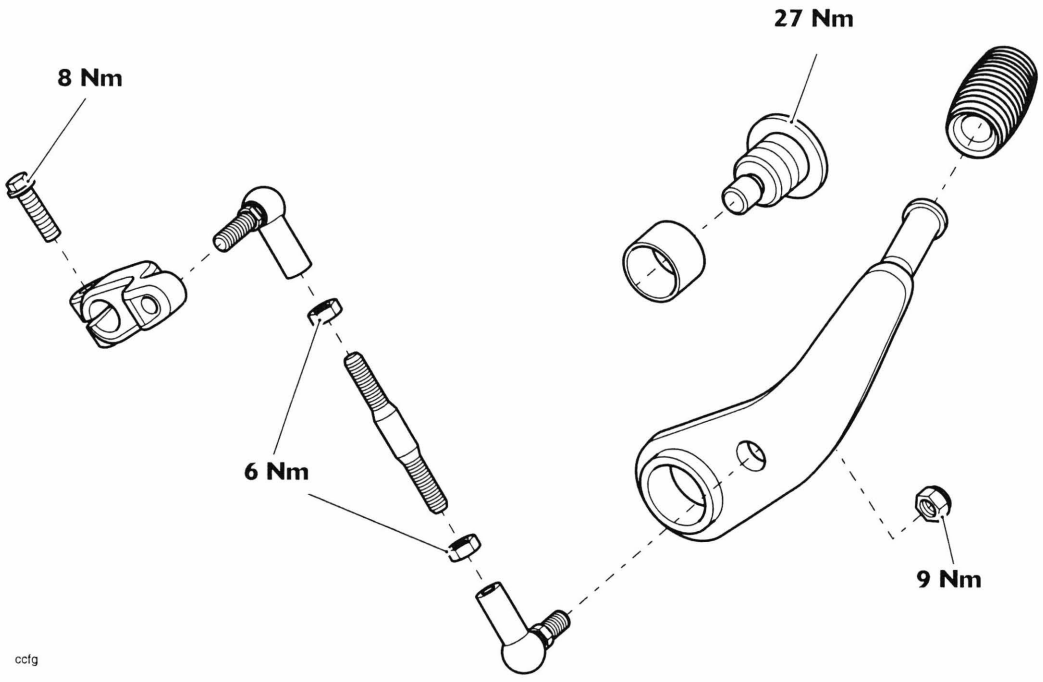

Exploded View - Gear Selector Mechanism - Rocket III Touring

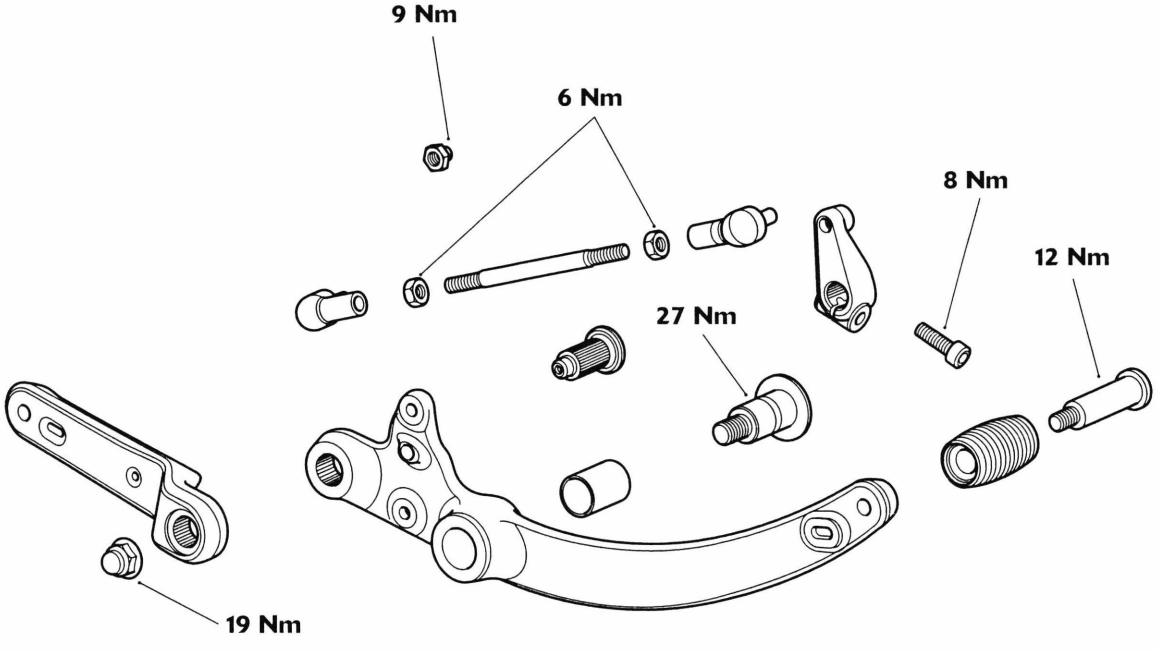

Exploded View - Gear Selector Mechanism - Rocket III Roadster

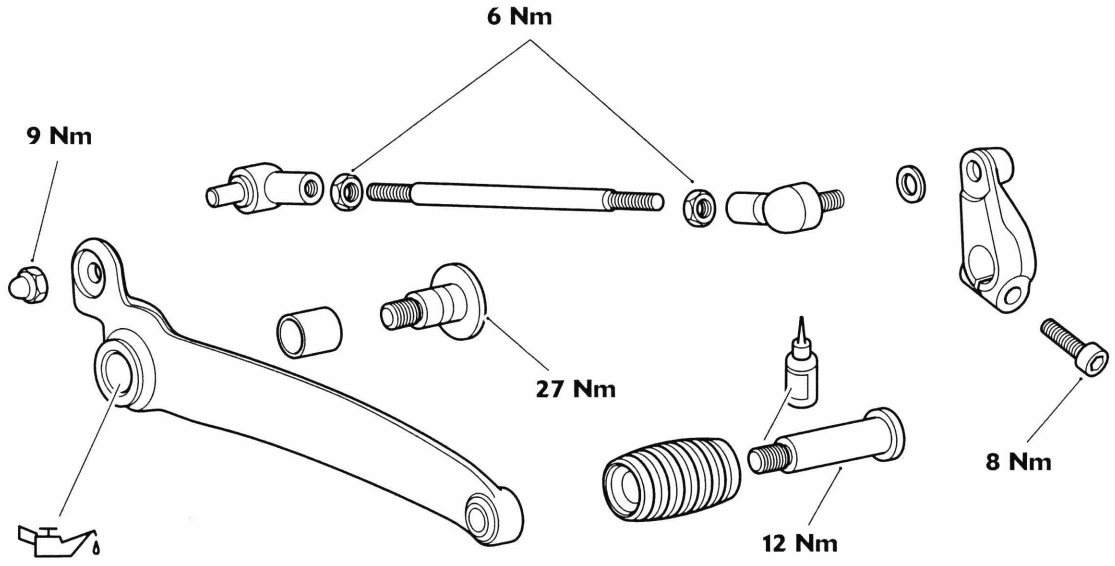

Exploded View - Torsional Damper Shaft Housing

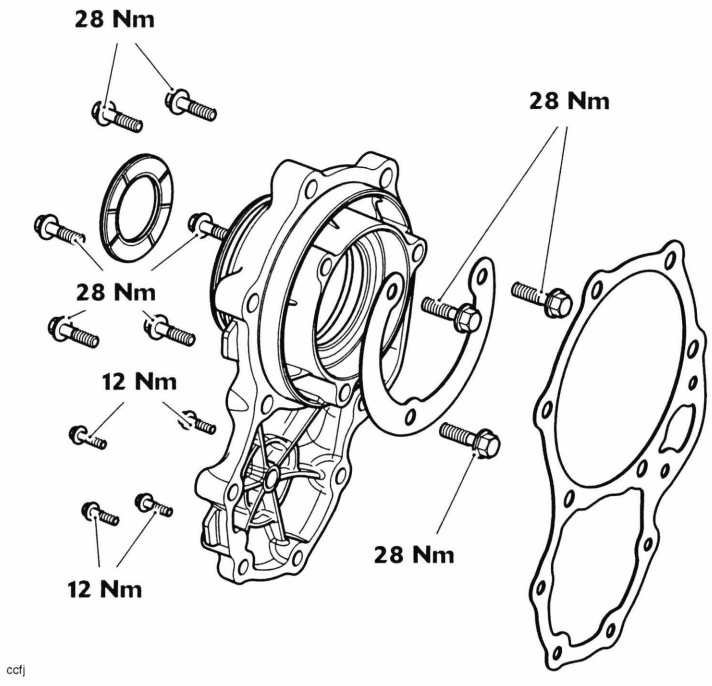

ccfj

Exploded View - Torsional Damper Shaft

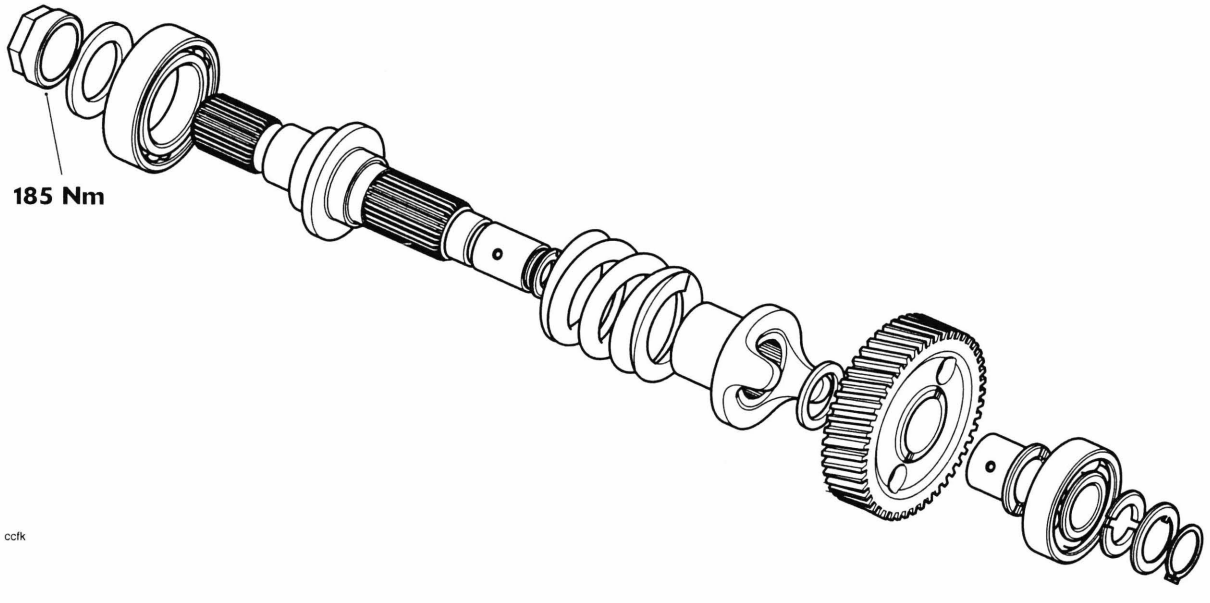

ccfk

Selector Shaft, Selector Forks and Drum

Removal

Note:

- **Prior to removal, mark, or make a note of the relative positions of each selector fork in the selector drum.**

1. Remove the engine from the frame (see page *10-2*).
2. Separate the lower crankcase from the upper (see page *5-5*).
3. Remove the output shaft from the crankcase.
4. Remove the C-clip from the selector shaft.

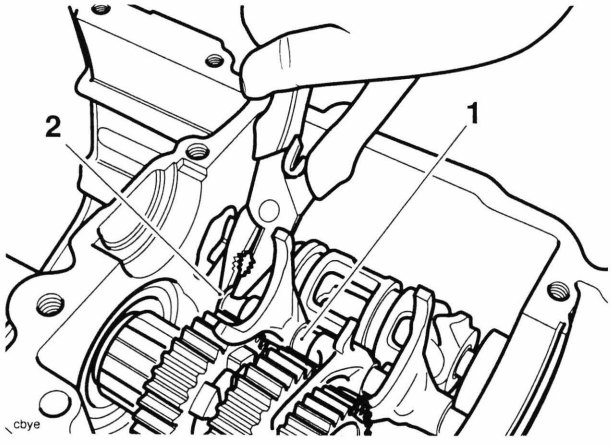

1. **Selector shaft**
2. **C-clip**

5. Insert an M6 bolt, hand tight only, into the thread at the front end of the selector shaft.
6. Pulling on the inserted bolt, ease the selector shaft out from the crankcase, collecting each selector fork as the exiting shaft releases them.

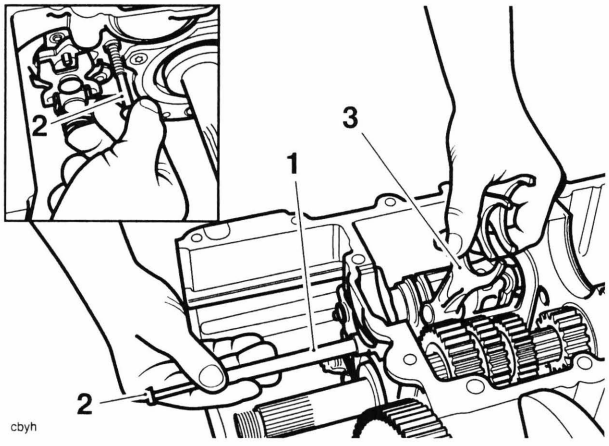

1. **Selector shaft**
2. **Bolt**
3. **Selector forks**

7. Remove the input shaft (see page *8-18*).
8. Remove the bolt securing the gear change actuator arm to the gear change shaft.

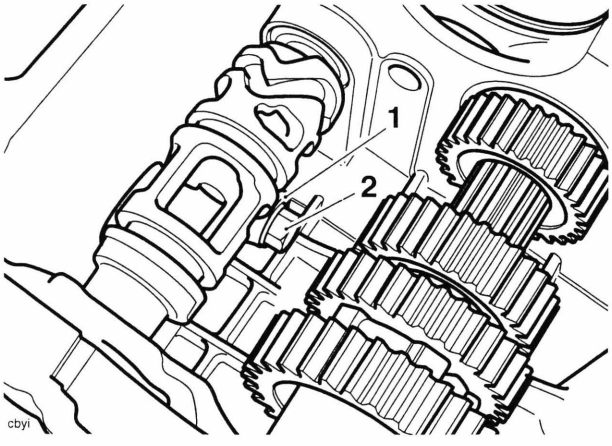

1. **Gear change actuator arm**
2. **Bolt**

Note:

- **Removal of the gear change shaft will detach the gear change actuator arm as the shaft slides out. Collect the actuator from inside the crankcase as soon as it is released. In addition, the detent spring will also become detached from the spring abutment bolt.**

9. Slide the gear change shaft out of the crankcase, collecting the gear change actuator arm and detent spring at the same time.

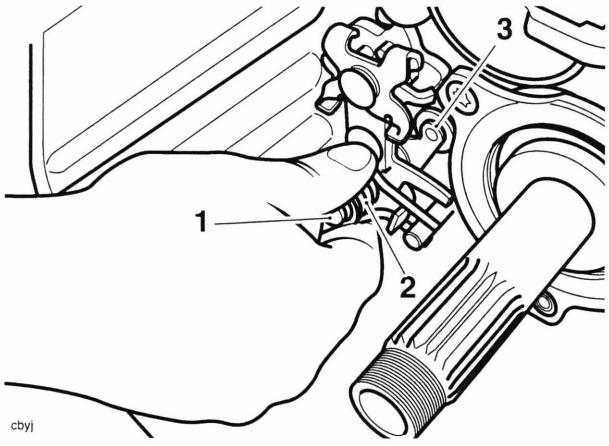

1. **Gear change shaft**
2. **Gear change actuator arm**
3. **Detent arm**

10. Insert a soft-faced tool through the selector drum to prevent it from turning, and then undo the screw securing the detent wheel to the selector drum.

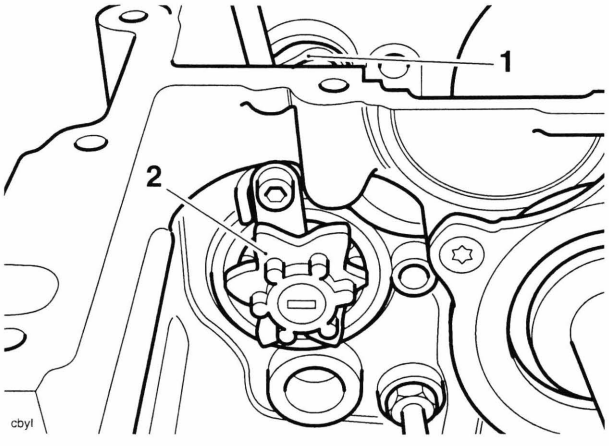

1. **Selector drum**
2. **Detent wheel**

11. Release the small screw securing the selector drum, bearing and keeper plate to the crankcase.

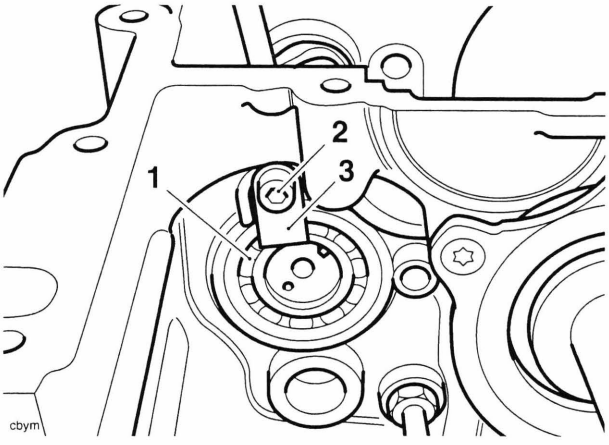

1. **Selector drum bearing**
2. **Screw**
3. **Keeper plate**

12. Pull/push the selector drum out and in to dislodge the bearing, then remove the drum from the crankcase.
13. To remove the actuator shaft, slide it inwards and recover it from inside the crankcase.

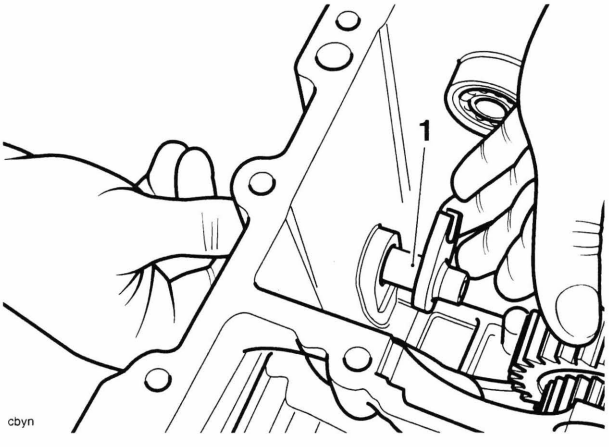

1. **Actuator shaft**

Note:

- **It is not normally necessary to remove the inner selector drum bearing, though it is possible to do so by drifting from behind its recess in the crankcase.**

14. If necessary, remove the spring abutment bolt.

Inspection

1. Inspect all springs for over-extension (i.e. abnormal gaps between coils). Replace as necessary.
2. Inspect all seals for damage and distortion. Renew as necessary.
3. Check the selector forks and selector grooves for wear beyond the service limits. Renew components as necessary.

Item	Standard	Service Limit
Selector fork thickness	5.90 - 6.00 mm	5.80 mm
Selector groove width	6.05 - 6.15 mm	6.30 mm
Fork to groove clearance	0.05 - 0.25 mm	0.50 mm

Installation

1. Refit the actuator shaft, ensuring it is pushed fully home in the crankcase.
2. Locate the selector drum to the crankcase and engage it in the inner bearing.

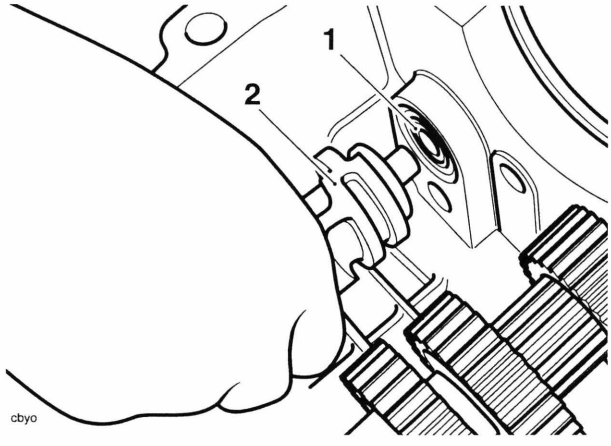

1. Inner bearing
2. Selector drum

3. Fit the selector drum outer bearing and bearing keeper plate and retain the plate using a new screw. Tighten the screw to **12 Nm**.
4. Apply ThreeBond 1305 to the threads of the spring abutment bolt (if removed). Fit and tighten it to **20 Nm**.
5. Position the detent wheel to the selector drum, engaging the pin on the drum with the corresponding recess in the rear of the wheel.

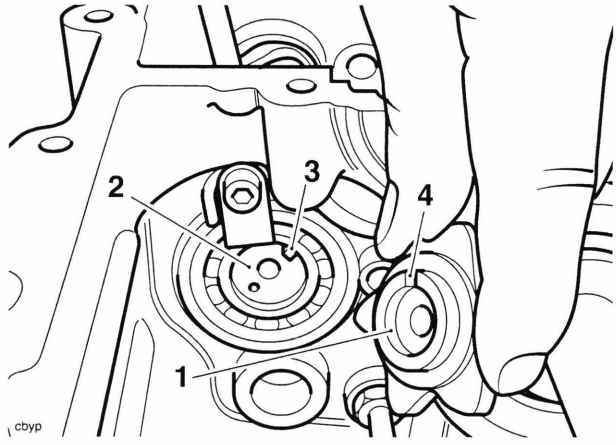

1. Detent wheel
2. Selector drum
3. Pin
4. Recess

6. Fit a new screw to the detent wheel, prevent the drum from turning using a soft-faced tool, then tighten the screw to **12 Nm**.
7. Slide the detent arm and spring onto the gear change shaft, with the spring eye end of the detent arm entering the shaft first.

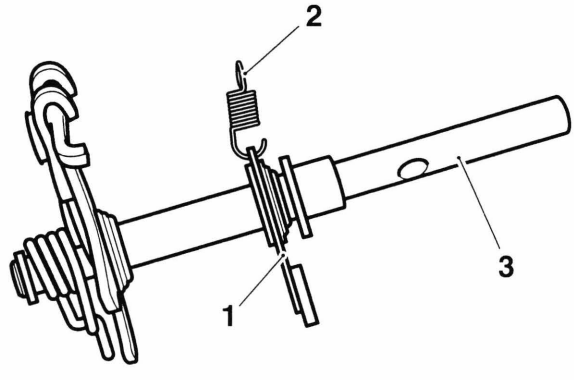

1. Detent arm
2. Spring eye
3. Shaft

8. Position the assembly to the crankcase and part engage it in its hole.
9. Locate and hold the ball-end of the gear change actuator arm in the actuator.

10. Feed the gear change shaft through the crankcase, engaging it in the actuator arm and also attaching the free end of the detent arm spring over the spring abutment bolt. Ensure that the gear change return spring also engages over the spring abutment bolt.

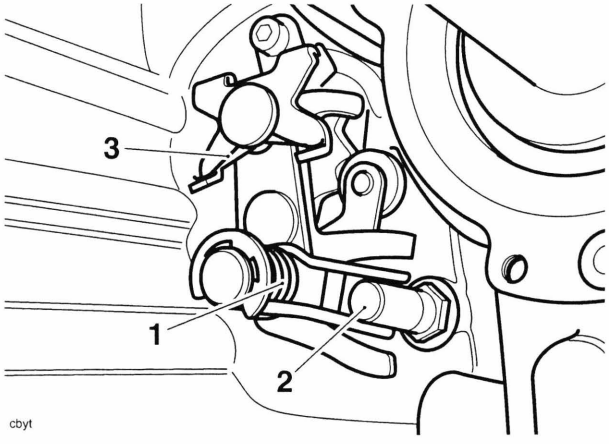

cbyt

1. **Detent arm spring**
2. **Spring abutment bolt**
3. **Gear change return spring**

11. Fit a new bolt to the gear change actuator and tighten it to **28 Nm**.

Note:

- **If a new bolt cannot be sourced, clean the threads of the old bolt and apply a spot of ThreeBond 1305 to the threads before fitting it.**

12. Refit the input shaft (see page *8-19*).

Note:

- **Selector forks are marked A, B and C. The marking letters always face the clutch end of the input shaft.**

13. Place the transmission in neutral. The transmission is in neutral when the wheel of the detent arm rests in a tooth on the detent wheel that has a V-shaped cut-out.

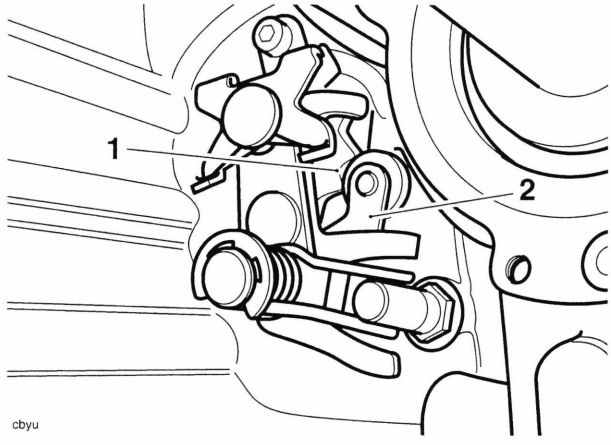

cbyu

1. **V-shaped cut out**
2. **Detent arm**

14. Partially insert the selector shaft into the crankcase.
15. Position and support the selector forks in the selector drum as noted or marked prior to removal.

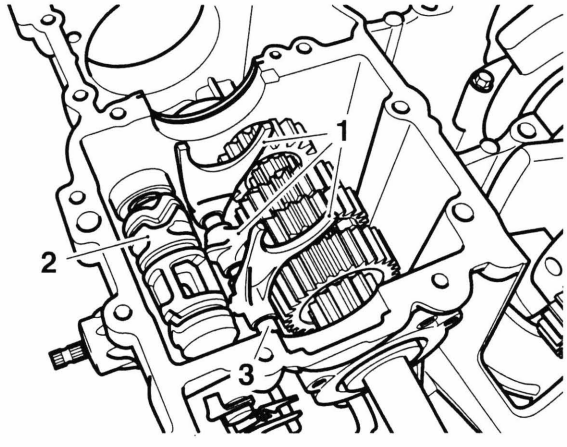

ccay

1. **Selector forks**
2. **Selector drum**
3. **Selector shaft**

16. Feed the selector shaft through the selector forks and secure it with a new c-clip.
17. Assemble the crankcases (see page *5-8*).
18. Refit the engine (see page *10-5*).

Torsional Damper Shaft

Removal

1. Remove the engine from the frame (see page *10-2*).
2. Remove the fixings securing the gear position sensor to the torsional damper shaft housing.
3. Withdraw the sensor and collect its O-ring.

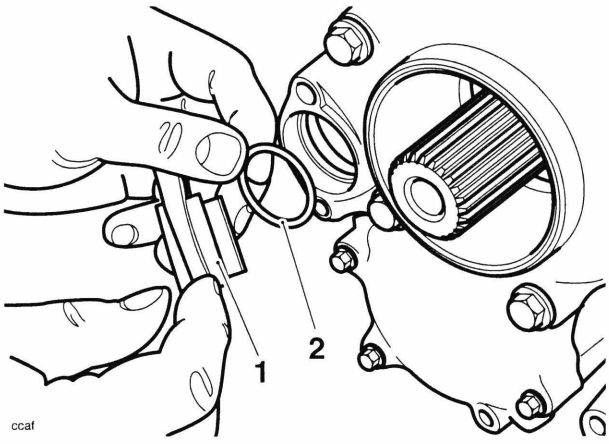

ccaf

1. Gear position sensor
2. O-ring

4. Release the bolts securing the damper shaft housing to the crankcases.

⚠ Caution

The torsional damper shaft assembly is often a tight fit in the crankcase. Never lever or force implements between the crankcase and housing as this will damage both components. Gently use a soft-faced mallet to ease the components apart.

5. Withdraw the damper shaft assembly.

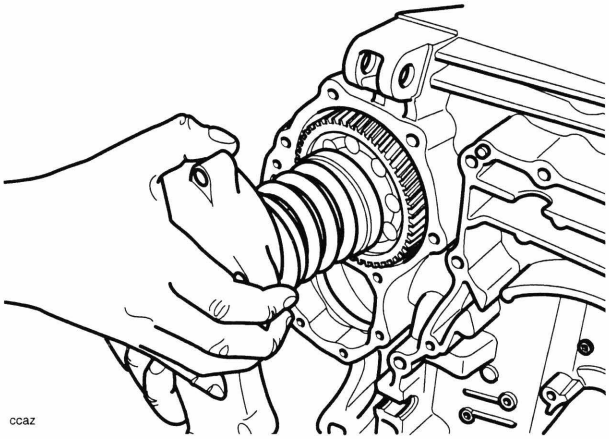
ccaz

6. Collect the gear position indicator shaft from inside the crankcase, taking care to not drop the spring and plunger from its outer end.

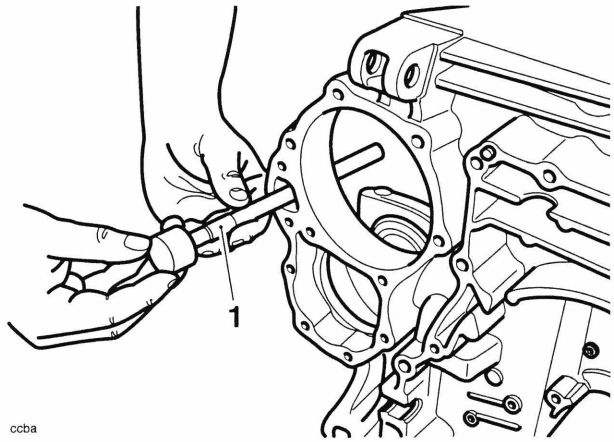

ccba

1. Gear position indicator shaft

Disassembly

1. Release the three bolts and remove the bearing retainer plate from the damper shaft housing.

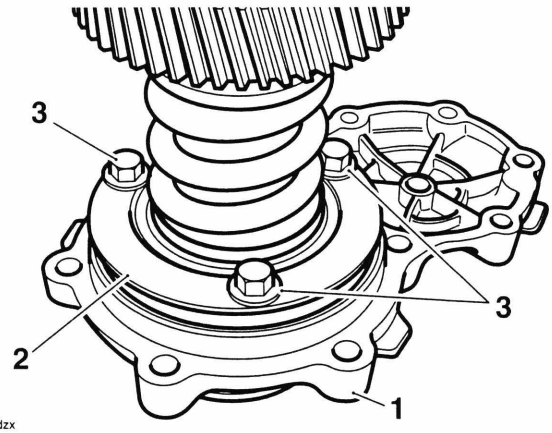

cdzx

1. Damper shaft housing
2. Bearing retainer plate
3. Bolts

⚠ Warning

When using a press, always wear overalls, eye, face and hand protection. Objects such as bearings frequently break-up under load and the debris caused during break-up may cause damage and injury to unprotected parts of the body.

Never wear loose clothing, which could become trapped in the press and cause crushing injury to the hand, arms or other parts of the anatomy.

2. Press the shaft assembly from the housing as follows:
   - Support the housing on press bars as shown below.

⚠ Caution

Failure to support the housing as close as possible to the bearing outer race, as described below, may result in damage to the housing.

   - Ensure the housing is supported as close as possible to the bearing outer race, but such that it will allow the bearing to pass through.
   - Press the shaft from the housing, collecting the shaft as it is released.

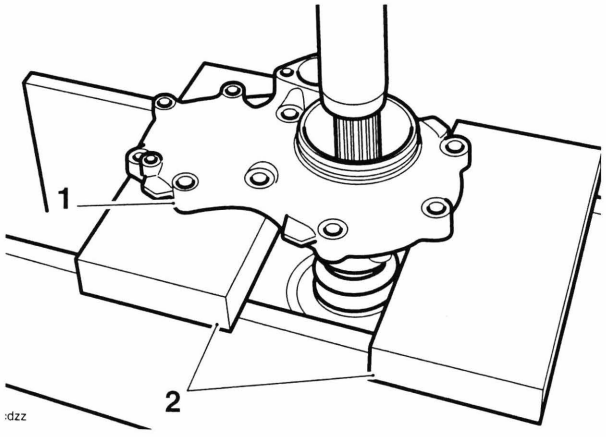

1. Damper shaft housing
2. Press bars

3. Remove and discard the oil seal from the damper shaft housing.
4. Working from the gear end of the shaft, remove and discard the circlip.

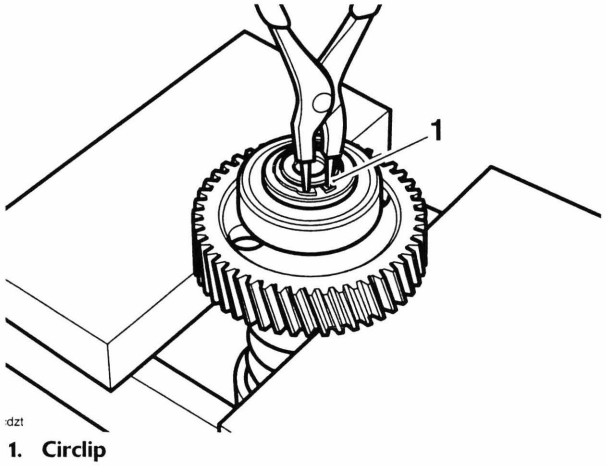

1. Circlip

5. Remove the collet retaining cap.
6. Remove the two collets.

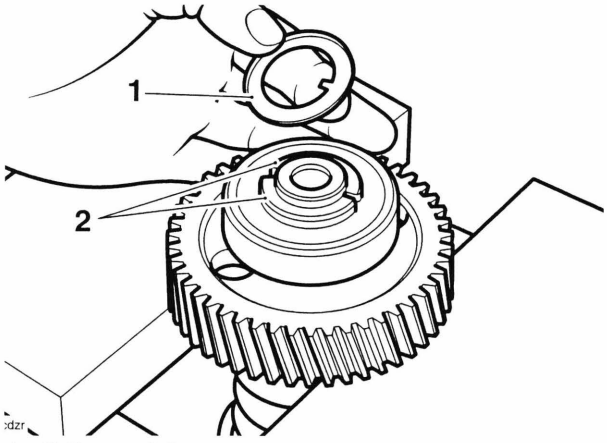

1. Collet retaining cap
2. Collets

Note:

- **Although the spring is under compression, this compression is fully released as the bearing is removed. Removal of the circlip, collets or the collet retaining cap will not result in the bearing, gear or spring being released from the shaft.**

7. Return the damper shaft to the press, supporting it under the gear. Press the shaft through the bearing, collecting the shaft as it is released.

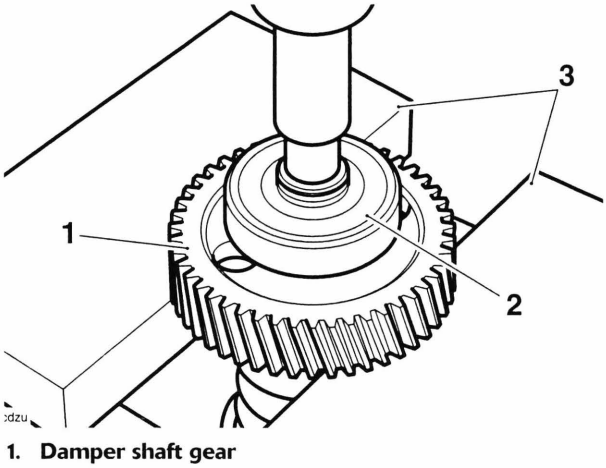

1. Damper shaft gear
2. Bearing
3. Press bars

8. Note the orientation of the bearing sleeve and gear on the damper shaft. Slide the gear and its bearing sleeve from the shaft.
9. Remove the thrust washer from the shaft.
10. Remove the damper sleeve.

11. Remove the spring.

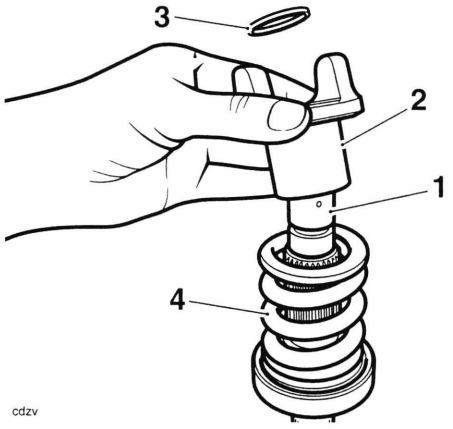

cdzv

1. **Damper shaft**
2. **Damper sleeve**
3. **Thrust washer**
4. **Spring**

12. Temporarily refit the damper sleeve without the spring. This will prevent the shaft from turning when the nut is removed.

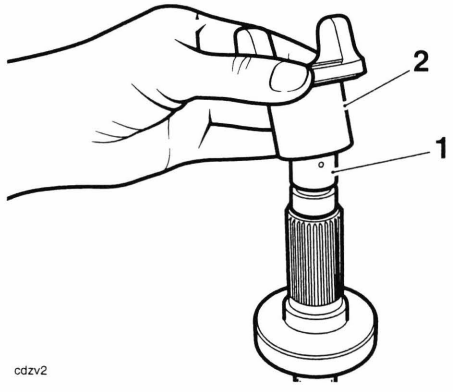

cdzv2

1. **Damper shaft**
2. **Damper sleeve**

13. Position the damper shaft in a vice with soft jaws fitted as shown below. Ensure the damper sleeve bosses are located between the jaws of the vice. Tighten the vice to prevent the shaft from turning and release the nut. Collect the Belleville washer from the shaft.

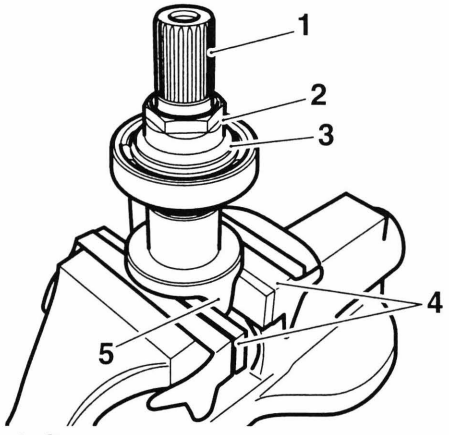

ceaw

1. **Damper shaft**
2. **Nut**
3. **Belleville washer**
4. **Soft jaws**
5. **Damper sleeve**

14. Return the damper shaft to the press, supporting it under the bearing. Press the shaft through the bearing, collecting the shaft as it is released. Discard the bearing.

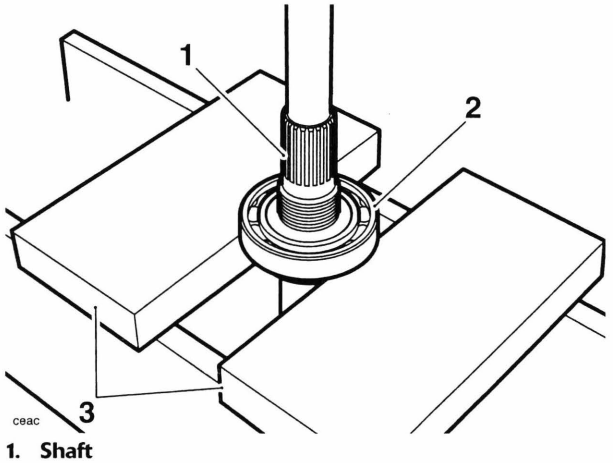

ceac

1. **Shaft**
2. **Bearing**
3. **Press plates**

Assembly

1. Working from the threaded end of the shaft, position a new bearing to the damper shaft, with the marked side of the bearing facing the threads.

Warning

When using a press, always wear overalls, eye, face and hand protection. Objects such as bearings frequently break-up under load and the debris caused during break-up may cause damage and injury to unprotected parts of the body.

Never wear loose clothing, which could become trapped in the press and cause crushing injury to the hand, arms or other parts of the anatomy.

2. Support the damper shaft and bearing on press bars, ensuring the bearing is supported on the inner race. Press the bearing onto the damper shaft.

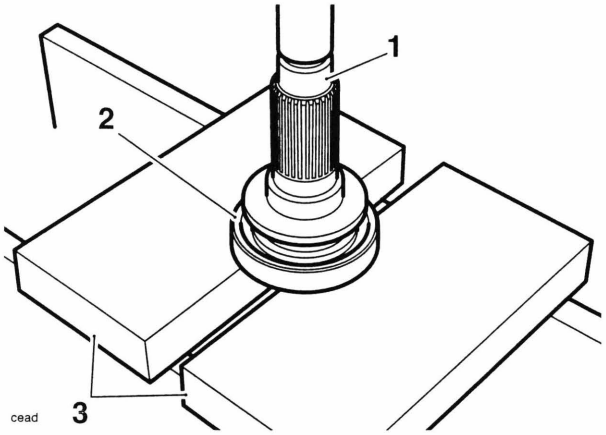

cead

1. **Damper shaft**
2. **Bearing**
3. **Press bars**

3. Fit the Belleville washer ('O' mark facing the threads), and fit the nut.

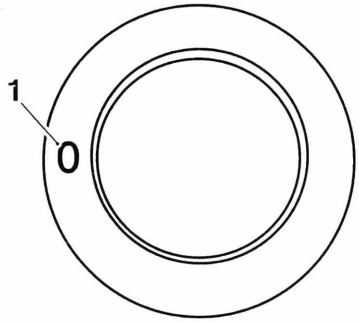

1. **'O' Mark**

4. Position the damper shaft in a vice with soft jaws fitted as described for removal. Tighten the vice to prevent the shaft from turning. Tighten the nut to **185 Nm**.
5. Working from the opposite end of the damper shaft, fit the spring and damper sleeve.

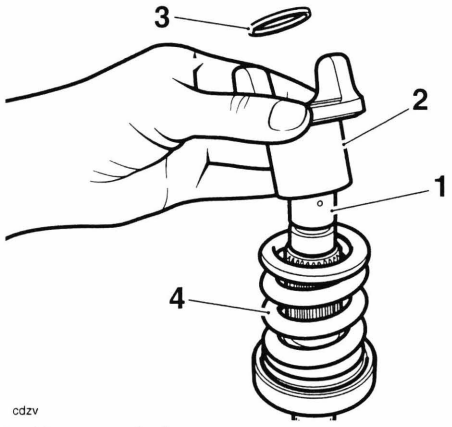

cdzv

1. **Damper shaft**
2. **Damper sleeve**
3. **Thrust washer**
4. **Spring**

6. Fit the thrust washer.
7. Lubricate the inside and outside of the bearing sleeve with a 50/50 solution of engine oil and molybdenum disulphide grease. Fit the sleeve to the gear.

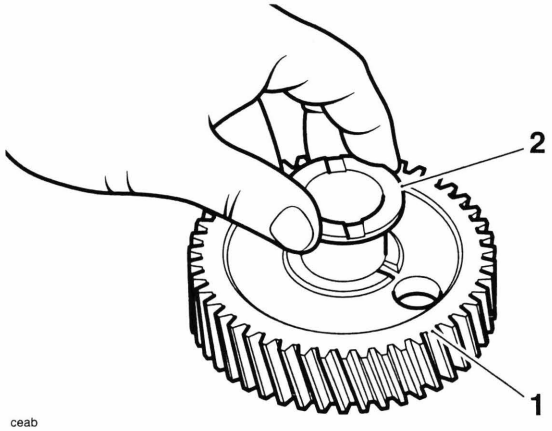

ceab

1. **Gear**
2. **Sleeve**

8. Position the gear and bearing sleeve to the shaft, ensuring the bosses of the damper sleeve locates in the correct slots in the gear as shown below, that is with the holes in the gear at 90° to the bosses.

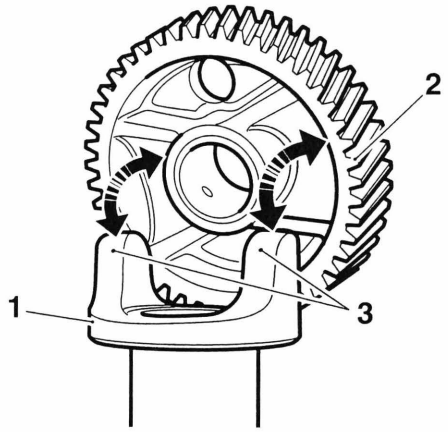

cdzw

1. **Damper sleeve (shaft not shown for clarity)**
2. **Gear**
3. **Damper sleeve bosses**

9. Position a new bearing to the shaft, with the shielded side facing towards the gear.
10. Return the damper shaft assembly to the press. Ensuring the bearing is supported under the inner race, press the shaft through the bearing.

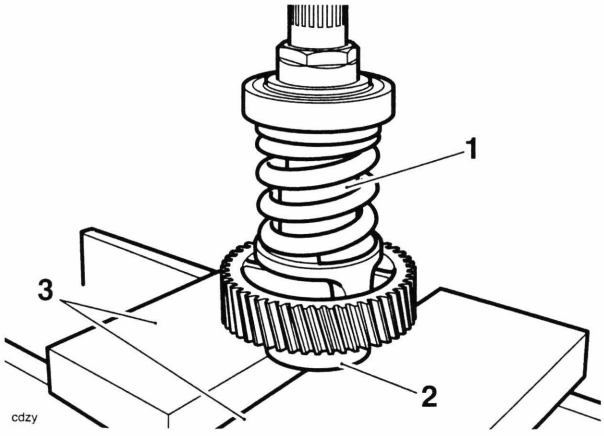

cdzy

1. **Damper shaft assembly**
2. **Bearing**
3. **Press bars**

Note:

- **The spring is compressed as the bearing is installed. Removal of the shaft assembly from the press will not result in the bearing, gear or spring being released from the shaft.**

11. Fit the two split collets to the shaft.
12. Fit the split collet retaining cap, ensuring the tag on the cap is located in the slot in the shaft.

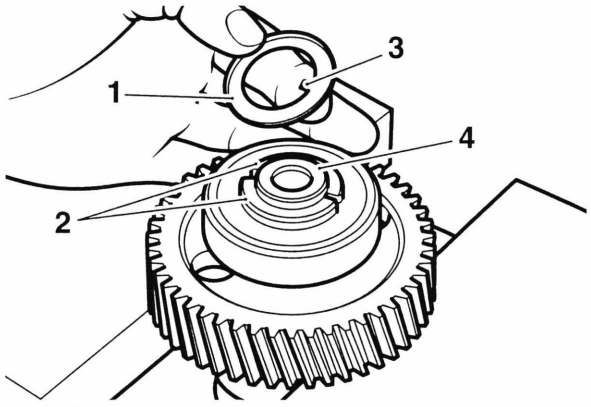

1. **Collet retaining cap**
2. **Collets**
3. **Tag**
4. **Slot**

13. Fit a new circlip.
14. Lubricate the nut and washer with grease to NLGI 2 specification.

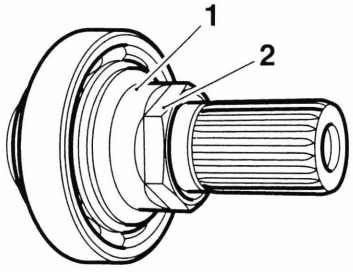

eaw1

1. **Washer**
2. **Nut**

15. Install a new damper shaft oil seal to the damper shaft housing. Lubricate the seal's knife-edge with grease to NLGI 2 specification.

⚠ Caution

Failure to support the housing on the drive shaft gaiter flange, as described below, may result in damage to the housing.

16. Support the housing on press bars, ensuring it is supported on the drive shaft gaiter flange, using as much of the circumference of the flange as possible.
17. Press the damper shaft assembly into the housing.

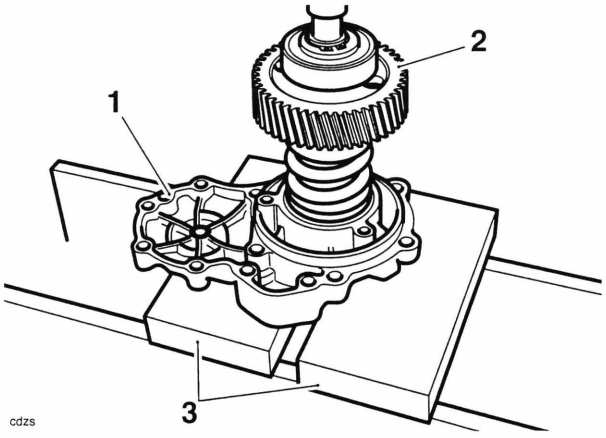

1. **Damper shaft housing**
2. **Damper shaft assembly**
3. **Press bars**

18. Refit the bearing retainer plate and install the bolts. Tighten to **28 Nm**.

Installation

1. Place a new torsional damper shaft housing gasket over the crankcase.

Note:

- **The gear position indicator shaft can also be fitted after installing the torsional damper shaft housing.**

2. Install the gear position indicator shaft, engaging the inner drive slot with the selector drum.
3. Locate the damper assembly to the crankcases and push fully home, engaging the meshing gears as you do so.
4. Fit the bolts and tighten as described below;
   - tighten the bolts to **28 Nm** in the sequence shown below.
   - tighten bolts one and two again to **12 Nm**.

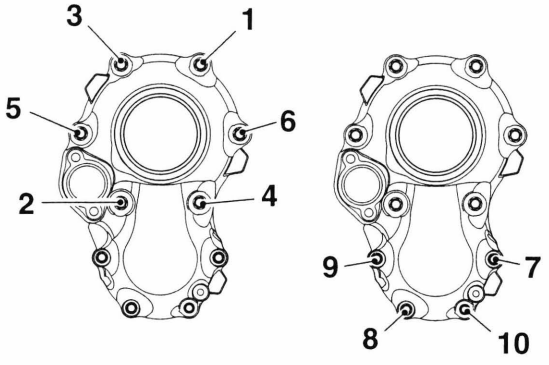

Tightening Sequence

5. Fit a new O-ring to the gear position sensor. Lubricate the O-ring with petroleum jelly.
6. Fit the gear position sensor and tighten its fixings to **5 Nm**.

Input and Output Shaft Assemblies

Removal

Note:

- **The input and output shafts may be removed from the upper crankcase after first separating the lower crankcase from the upper.**

Note:

- **The rear bearing on the input shaft remains in the crankcase on removal of the shaft.**

1. Remove the engine from the frame (see page *10-2*).
2. Separate the lower crankcase from the upper (see page *5-5*).

Note:

- **The output shaft may be retained in the lower crankcase on separation from the upper. If the output shaft is not retained in the lower crankcase, make a note of the position of each selector fork on the output shaft.**

3. Lift the output shaft from the upper crankcase noting the orientation of each bearing and their circlips.
4. Remove the selector shaft and forks (see page *8-8*).

Note:

- **The input shaft bearing housing fixings may not be reused but should be retained for use during installation of the input shaft.**

5. Release the three Torx fixings securing the input shaft bearing housing to the upper crankcase.

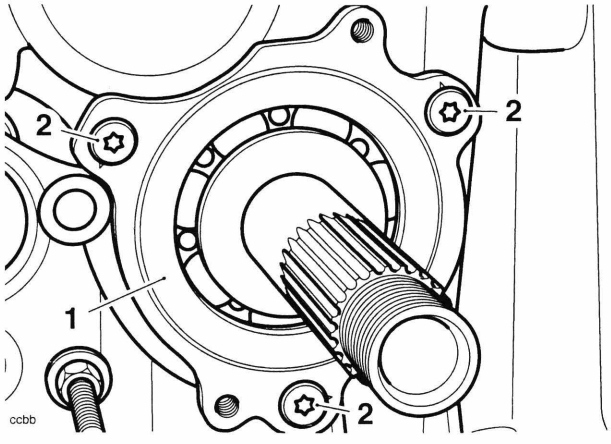

1. Input shaft bearing housing
2. Torx fixings

6. Assemble the adapter, T3880210 to the slide hammer T3880208, fully engaging the threads.

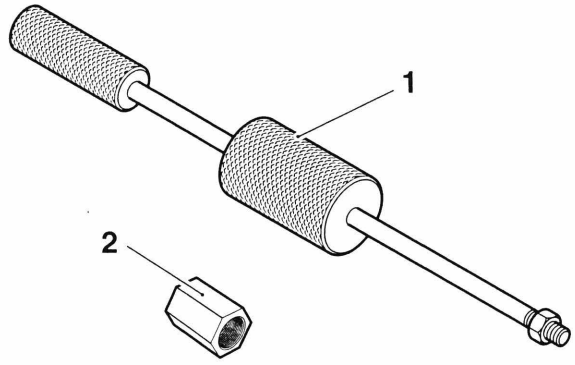

1. Slide hammer T3380208
2. Adaptor T3880210

7. Assemble the adaptor and slide hammer to the input shaft, fully engaging the threads. Draw back the slide part of the hammer swiftly to facilitate the removal of the input shaft bearing housing.

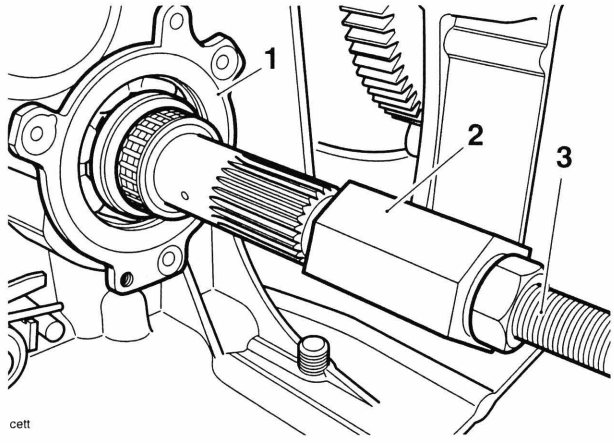

1. Bearing housing
2. Adaptor T3880210
3. Slide hammer T3380208

8. With the bearing housing released, withdraw the input shaft through the aperture for the bearing housing.

Installation

1. Locate the input shaft to the upper crankcase, installing it through the aperture for the bearing housing.
2. Fit the bearing housing into the aperture, by hand, as deeply as possible.
3. Using the old Torx fixings, evenly and progressively, draw the bearing housing into the upper crankcase until fully home. Remove and discard the Torx fixings.
4. Fit new Torx fixings to the bearing housing. Tighten them to **12 Nm**.
5. Using a small punch, stake the Torx heads to the corresponding notches in the upper crankcase.

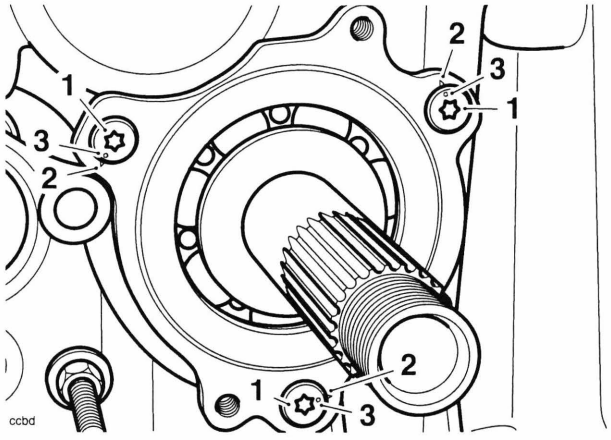

1. **Torx fixings**
2. **Notches**
3. **Stake marks**

6. Refit the selectors and shaft (see page *8-10*).
7. Refit the output shaft to the crankcase ensuring the snap-ring on the outside of the inner bearing locates in their corresponding groove in the crankcase.

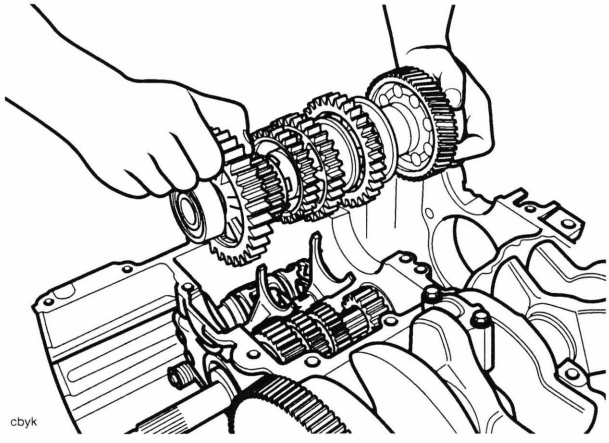

Installing the Output Shaft

8. Assemble the crankcases (see page *5-8*).
9. Refit the engine to the frame (see page *10-5*).

Output Shaft - Up to Engine Number 300895

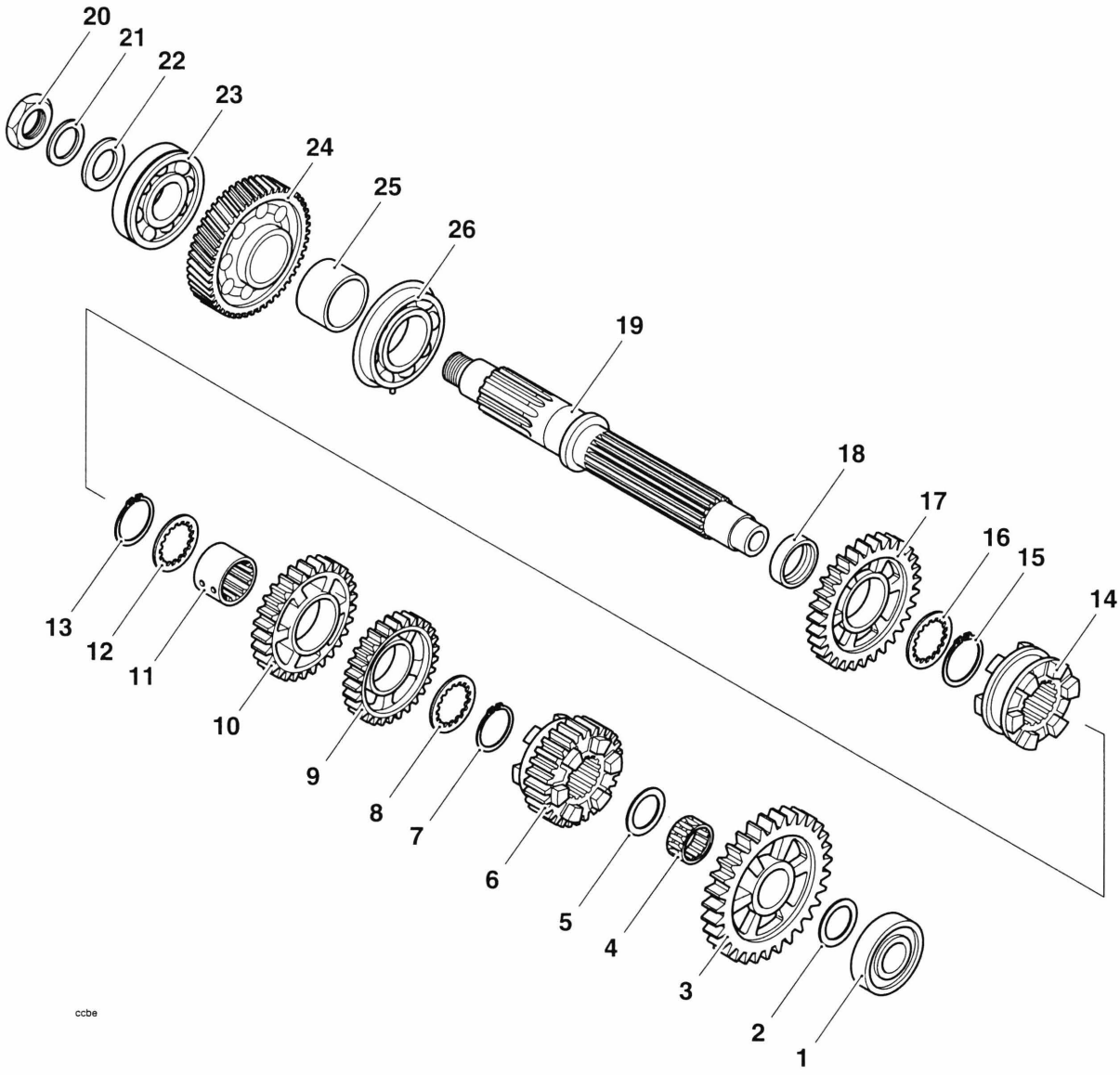

1. Ball bearing
2. Thrust washer
3. First gear
4. Needle roller bearing
5. Thrust washer
6. Fifth gear
7. Circlip
8. Thrust washer
9. Fourth gear
10. Third gear
11. Splined bush
12. Thrust washer
13. Circlip
14. Dog ring
15. Circlip
16. Thrust washer
17. Second gear
18. Second gear bush
19. Output shaft
20. Nut
21. Belleville washer
22. Flat washer
23. Ball bearing
24. Output gear
25. Spacer
26. Ball bearing

Disassembly

Note:

- **All numbers given within brackets in the procedure below refer directly to the numbered items in the above diagram.**
- **For engines up to engine number 300895, parts 8, 11 and 12 are no longer available. Should these parts need to be replaced, use parts 8 and 11 shown in the illustration for output shaft - from engine number 300896 (see page *8-24*).**
- **For engines from engine number 244280, parts 14 (second gear) and 17 (dog ring), have been changed. The second gear windows are reduced from 6 to 4 windows and the second gear dogs on the dog ring have increased from 6 to 8 dogs. These parts must be replaced as a pair (see page *8-22* step 7).**
- **For engines from engine number 246088, parts 9 (fourth gear), 6 (fifth gear) and 3 (first gear), have been changed. The first gear windows are reduced from 6 to 4 windows and the first gear dogs on fifth gear have increased from 6 to 8 dogs. These parts must be replaced as a set (see page *8-23* step 14).**

Make a note or mark the orientation of all parts prior to removal.

1. Remove the ball bearing (1) and washer (2).
2. Remove first gear (3) and its needle roller bearing (4).
3. Remove the first gear thrust washer (5).
4. Remove fifth gear (6), revealing a circlip (7) that secures fourth and third gears.
5. Remove the circlip (7).
6. Slide off the thrust washer (8) from in front of fourth gear (9), then slide off fourth gear.
7. Slide off third gear (10), the splined third/fourth gear bush (11) and the thrust washer (12).
8. Remove the circlip (13) from in front of the splined dog ring (14).
9. Slide off the splined dog ring (14).
10. Remove the circlip (15) from in front of second gear (17).
11. Slide off the second gear thrust washer (16), then second gear (17) and its bush (18).
12. Working now from the other end of the shaft, remove the large nut (20), Belleville washer (21) and flat washer (22).
13. Slide off the ball bearing (23), output gear (24) and spacer (25).

Warning

When using a press, always wear overalls, eye face and hand protection. Objects such as bearings frequently break-up under load and the debris caused during break-up may cause damage and injury to unprotected parts of the body.

Never wear loose clothing, which could become trapped in the press and cause crushing injury to the hand, arms or other parts of the anatomy.

Place the shaft (19) in a press with the threaded end of the shaft facing the press ram. Support the centre bearing (26) on press bars.

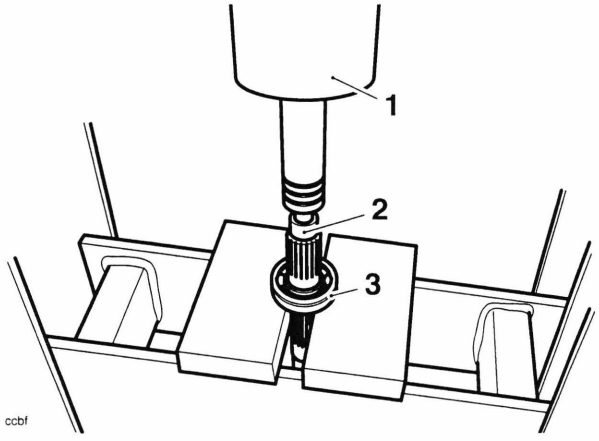

1. **Press**
2. **Output shaft**
3. **Centre bearing**

14. Press the shaft through the bearing.

Inspection

1. Examine all gears, bearings and bushes and thrust washers for damage, distortion, chipped teeth and wear beyond the service limits. Replace all suspect components and always use new circlips to assemble the shaft.

Assembly

Note:

- **Lubricate each gear, thrust washer and bush with clean engine oil during assembly.**

Note:

- **The circlips used on the output shaft have a flat side and an angled side. Illustrations throughout the assembly text indicate which orientation of each circlip is correct.**

⚠ Caution

Bushes with oil holes must always be **MISALIGNED** with the corresponding oil holes in the output shaft. Reduced oil pressure and gear lubrication may result from alignment of the oil holes, which would cause premature wear of engine and transmission components.

⚠ Warning

When using a press, always wear overalls, eye face and hand protection. Objects such as bearings frequently break-up under load and the debris caused during break-up may cause damage and injury to unprotected parts of the body.

Never wear loose clothing, which could become trapped in the press and cause crushing injury to the hand, arms or other parts of the anatomy.

1. Place the centre output shaft bearing (26) on press bars, ensuring that the press bars support the inner race of the bearing and the circlip groove on the outer race is nearest to the press bars.

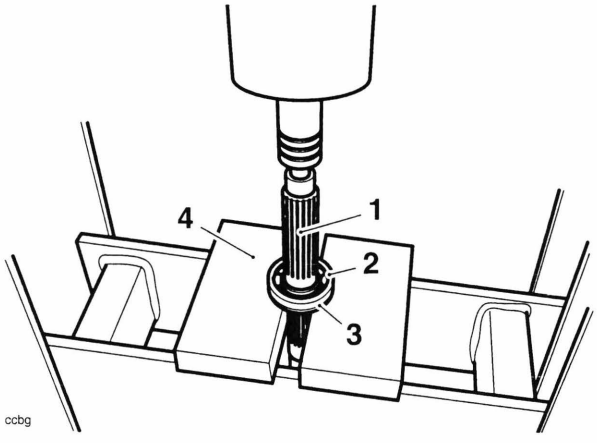

ccbg

1. **Output shaft**
2. **Bearing**
3. **Circlip groove**
4. **Press bars**

2. Locate the output shaft (19) to the bearing, with the threaded end pointing through the bearing (i.e. away from the press).
3. Press the output shaft through the bearing until the shoulder in the centre of the shaft contacts the bearing face.
4. Fit the spacer (25) to the shaft, then slide on the output gear (24).
5. Fit the bearing (24) to the shaft and retain with the flat washer (22), Belleville washer (21).
6. Apply ThreeBond 1305 to the nut (20). Fit the nut to the output shaft and tighten to **145 Nm**. Stake the nut to the output shaft.

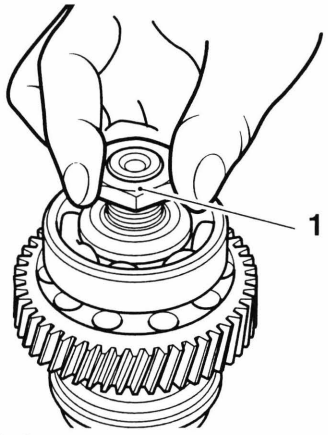

cfai

1. **Output shaft nut**

7. Working from the other end of the shaft, slide on the second gear bush (18).
8. Check second gear and the splined dog ring. If any of these components need to be replaced and second gear has 6 windows, replace both items.
   If second gear has 4 windows, replace the item that needs to be replaced.

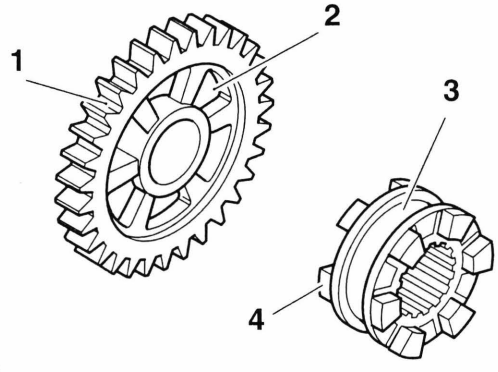

ccbe2

1. **Second gear**
2. **Window (1 of 6 old condition)**
3. **Splined dog ring**
4. **Second gear dog (1 of 6 old condition)**

9. Fit the second gear (17) and the thrust washer (16).

10. Fit a new circlip (15), orientating the circlip as shown below.

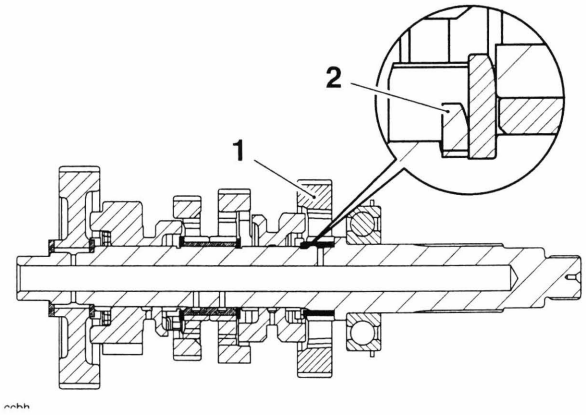

ccbh

1. Second gear
2. Circlip

11. Fit the splined dog ring (14) to the shaft.
12. Retain the dog ring with a new circlip (13), orientating the circlip as shown below.

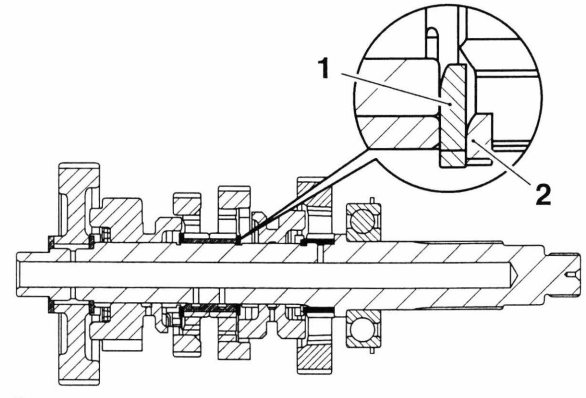

ccbi

1. Dog ring
2. Circlip

13. Check the thrust washer (8), splined bush (11) and thrust washer (12). If serviceable, refit them in the sequence mentioned from step 12.

Note:

- **If item 8, 11 or 12 need to be replaced, discard all three items and fit the two shouldered splined bushes (11 and 8) as shown in the illustration for output shaft - from engine number 300896 (see page *8-24*).**
  To fit the shouldered splined bushes with the third and fourth gears, see page *8-27* steps 11 to 14. Then continue from step 15 on this page.

14. Fit the thrust washer (12) and splined bush (11).
15. Check first, fourth and fifth gears. If any of these components need to be replaced and first gear has 6 windows, replace all three items.
    If first gear has 4 windows, replace the item that needs to be replaced.

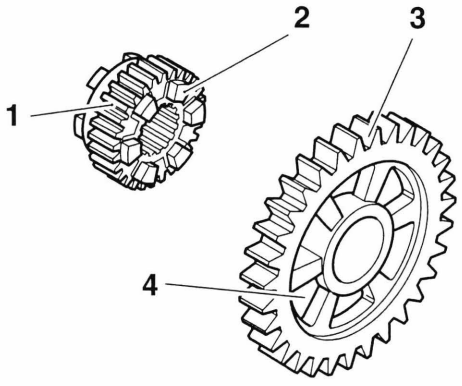

ccbe3

1. Fifth gear
2. First gear dog (1 of 6 old condition)
3. First gear
4. Window (1 of 6 old condition)

16. Slide third and fourth gears (10 and 9) onto the splined bush.
17. Fit the thrust washer (8), then a new circlip (7), orientating the circlip as shown below.

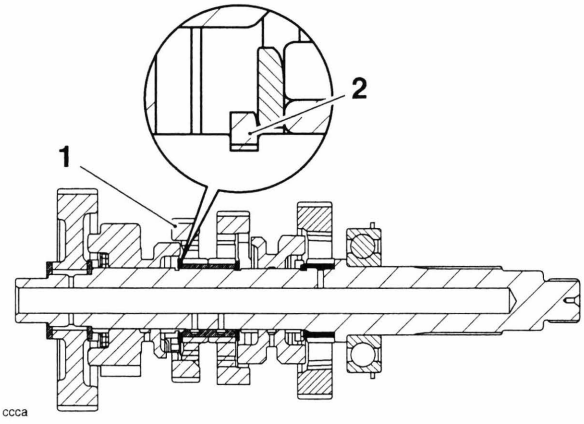

ccca

1. Third/fourth gear
2. Circlip

18. Fit fifth gear (6) to the shaft, followed by the thrust washer (5).
19. To complete assembly of the output shaft, fit the needle roller bearing (4), first gear (3), thrust washer (2) and bearing (1).

Output Shaft - From Engine Number 300896

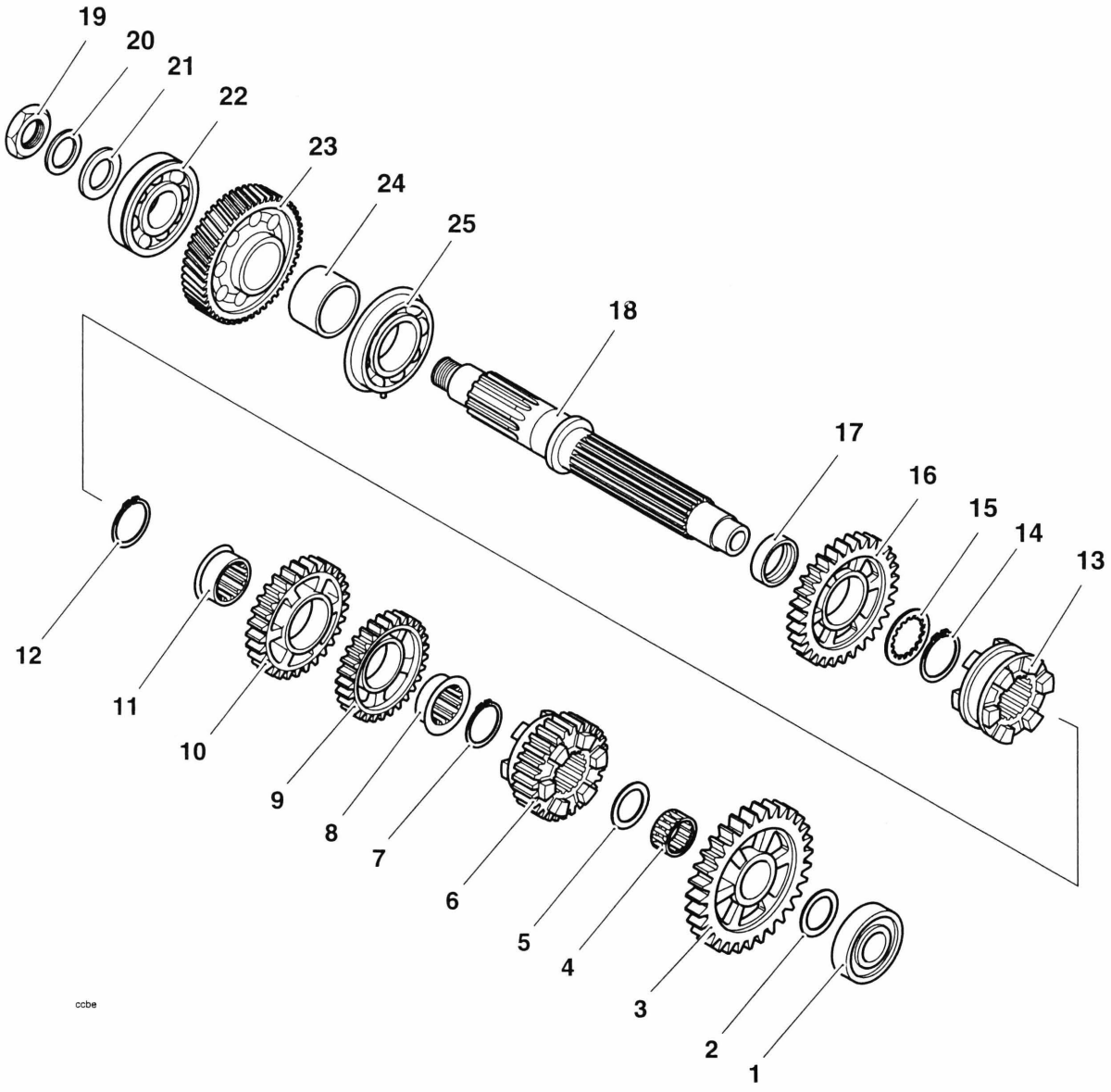

1. Ball bearing
2. Thrust washer
3. First gear
4. Needle roller bearing
5. Thrust washer
6. Fifth gear
7. Circlip
8. Shouldered splined bush
9. Fourth gear
10. Third gear
11. Shouldered splined bush
12. Circlip
13. Dog ring
14. Circlip
15. Thrust washer
16. Second gear
17. Second gear bush
18. Output shaft
19. Nut
20. Belleville washer
21. Flat washer
22. Ball bearing
23. Output gear
24. Spacer
25. Ball bearing

Disassembly

Note:

- **All numbers given within brackets in the procedure below refer directly to the numbered items in the above diagram.**

Make a note or mark the orientation of all parts prior to removal.

1. Remove the ball bearing (1) and washer (2).
2. Remove first gear (3) and its needle roller bearing (4).
3. Remove the first gear thrust washer (5).
4. Remove fifth gear (6), revealing a circlip (7) that secures fourth and third gears.
5. Remove the circlip (7).
6. Slide off the shouldered splined bush (8) and fourth gear (9).
7. Slide off third gear (10) and the shouldered splined bush (11).
8. Remove the circlip (12) from in front of the splined dog ring (13).
9. Slide off the splined dog ring (13).
10. Remove the circlip (14) from in front of second gear (16).
11. Slide off the second gear thrust washer (15), then second gear (16) and its bush (17).
12. Working now from the other end of the shaft, remove the large nut (19), Belleville washer (20) and flat washer (21).
13. Slide off the ball bearing (22), output gear (23) and spacer (24).

⚠ Warning

When using a press, always wear overalls, eye face and hand protection. Objects such as bearings frequently break-up under load and the debris caused during break-up may cause damage and injury to unprotected parts of the body.

Never wear loose clothing, which could become trapped in the press and cause crushing injury to the hand, arms or other parts of the anatomy.

14. Place the shaft (18) in a press with the threaded end of the shaft facing the press ram. Support the centre bearing (25) on press bars.

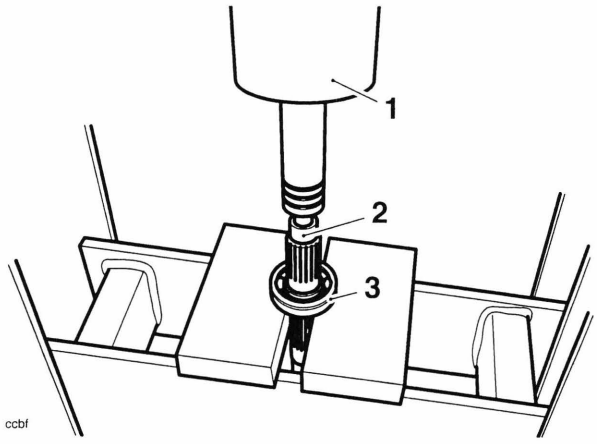

1. **Press**
2. **Output shaft**
3. **Centre bearing**

15. Press the shaft through the bearing.

Inspection

1. Examine all gears, bearings and bushes and thrust washers for damage, distortion, chipped teeth and wear beyond the service limits. Replace all suspect components and always use new circlips to assemble the shaft.

Assembly

Note:

- **Lubricate each gear, thrust washer and bush with clean engine oil during assembly.**

Note:

- **The circlips used on the output shaft have a flat side and an angled side. Illustrations throughout the assembly text indicate which orientation of each circlip is correct.**

⚠ Caution

Bushes with oil holes must always be **MISALIGNED** with the corresponding oil holes in the output shaft. Reduced oil pressure and gear lubrication may result from alignment of the oil holes, which would cause premature wear of engine and transmission components.

⚠ Warning

When using a press, always wear overalls, eye face and hand protection. Objects such as bearings frequently break-up under load and the debris caused during break-up may cause damage and injury to unprotected parts of the body.

Never wear loose clothing, which could become trapped in the press and cause crushing injury to the hand, arms or other parts of the anatomy.

1. Place the centre output shaft bearing (25) on press bars, ensuring that the press bars support the inner race of the bearing and the circlip groove on the outer race is nearest to the press bars.

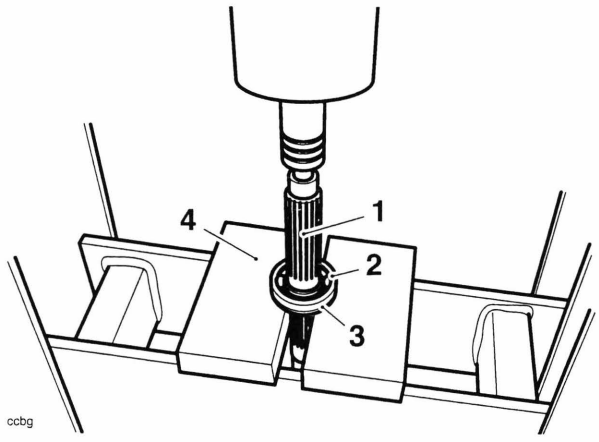

1. **Output shaft**
2. **Bearing**
3. **Circlip groove**
4. **Press bars**

2. Locate the output shaft (18) to the bearing, with the threaded end pointing through the bearing (i.e. away from the press).
3. Press the output shaft through the bearing until the shoulder in the centre of the shaft contacts the bearing face.
4. Fit the spacer (24) to the shaft, then slide on the output gear (23).
5. Fit the bearing (22) to the shaft and retain with the flat washer (21), Belleville washer (20).
6. Apply ThreeBond 1305 to the nut (19). Fit the nut to the output shaft and tighten to **145 Nm**. Stake the nut to the output shaft.

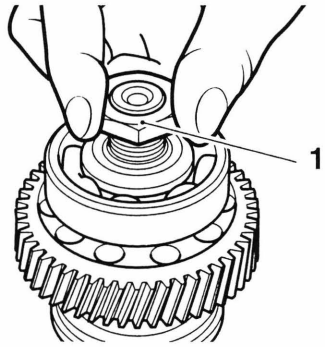

1. **Output shaft nut**

7. Working from the other end of the shaft, slide on the second gear bush (17).
8. Fit the second gear (16) and the thrust washer (15).
9. Fit a new circlip (14), orientating the circlip as shown below.

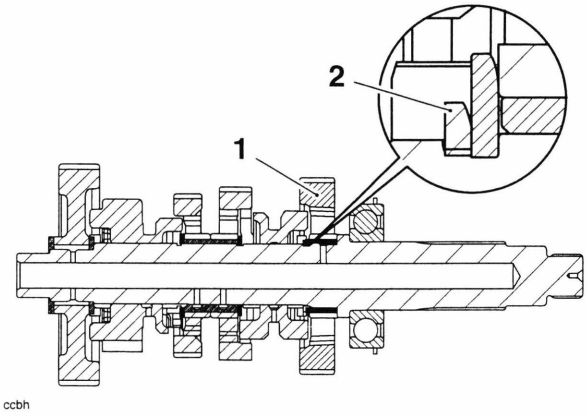

1. **Second gear**
2. **Circlip**

10. Fit the splined dog ring (13) to the output shaft.
11. Retain the dog ring with a new circlip (12), orientating the circlip as shown below.

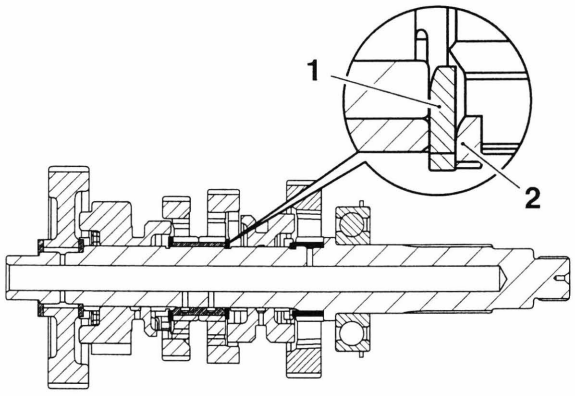

ccbi

1. Dog ring
2. Circlip

12. Fit the shouldered splined bush (11) to the output shaft. For the correct orientation of the shouldered splined bush see the illustration on page *8-24*.
13. Slide third gear (10) onto the shouldered splined bush.
14. Fit the shouldered splined bush (8) in to the third gear (9), then fit to the output shaft. For the correct orientation of the shouldered splined bushes see the illustration on page *8-24*.
15. Fit a new circlip (7), orientating the circlip as shown below.

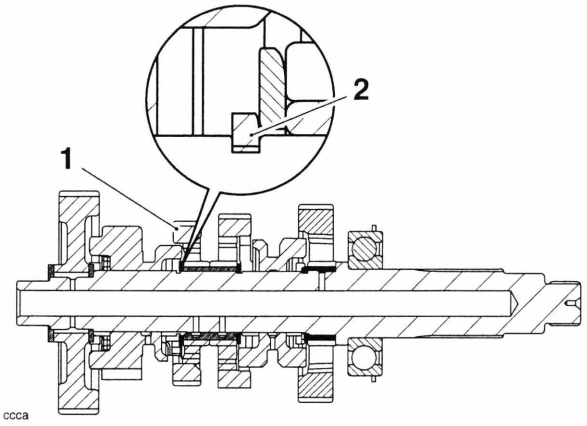

ccca

1. Third/fourth gear
2. Circlip

16. Fit fifth gear (6) to the shaft, followed by the thrust washer (5).
17. To complete assembly of the output shaft, fit the needle roller bearing (4), first gear (3), thrust washer (2) and bearing (1).

Input Shaft

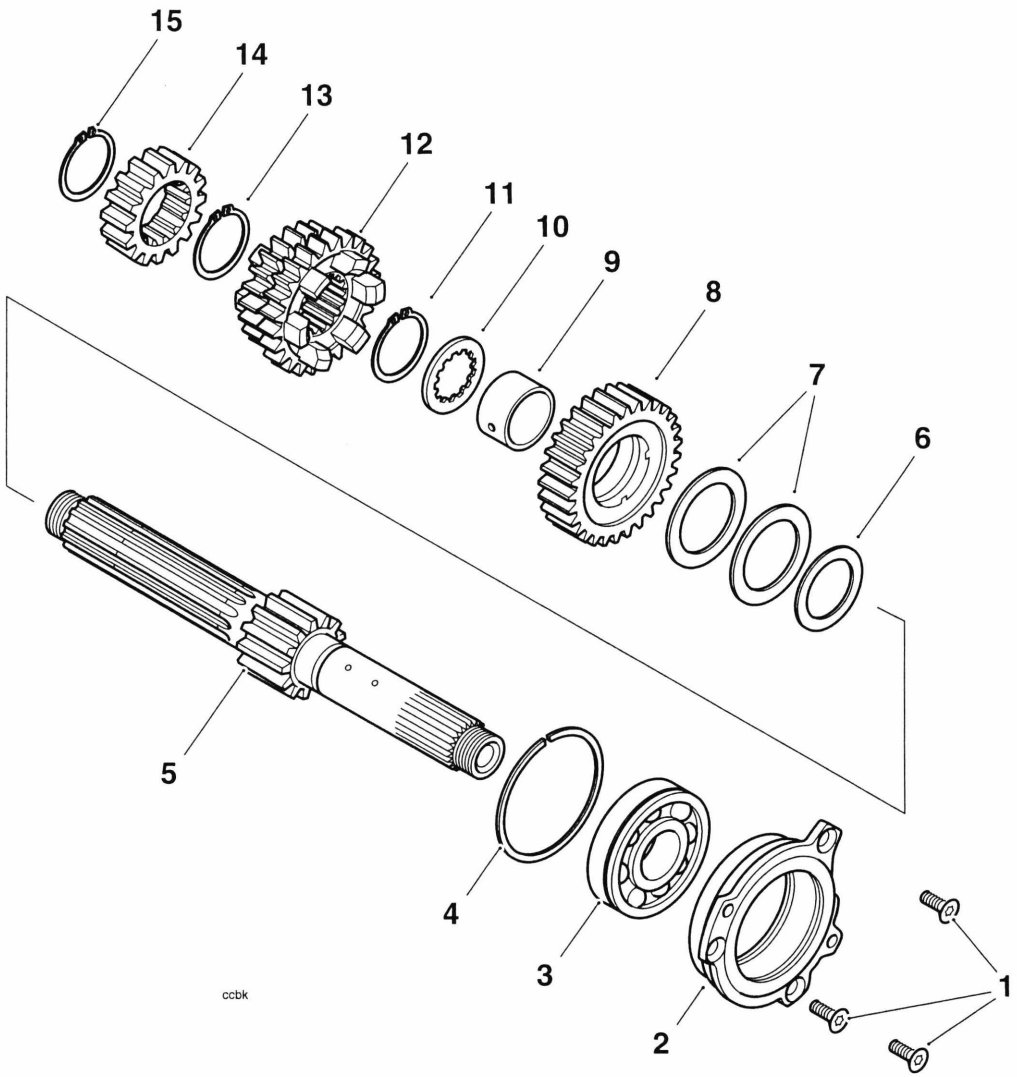

1. Torx screws
2. Bearing retainer plate
3. Ball bearing
4. Retaining ring
5. Input shaft
6. Thrust washer
7. Belleville washers
8. Fifth gear
9. Fifth gear bush
10. Thrust washer
11. Circlip
12. Third/fourth gear
13. Circlip
14. Second gear
15. Circlip

Disassembly

1. Remove the circlip (15) from in front of second gear (14).
2. Remove second gear (14).
3. Remove the circlip (13) from in front of third/fourth gear (12).
4. Remove third/fourth gear (12).
5. Remove the circlip (11) from in front of fifth gear (8).
6. Remove the thrust washer (10), fifth gear (8) and the fifth gear bush (9).
7. Note (or mark) the orientation of the two Belleville washers (7), then remove them from the shaft.
8. Remove the thrust washer (6).

Note:

- **Unless the bearing at the clutch end of the input shaft is damaged or worn, it is not normally necessary to remove it from the shaft. The bearing is pressed onto the shaft and is also pressed into its housing and retained by a snap-ring. The bearing and housing are removed from the shaft together and are then separated.**

⚠ Warning

When using a press, always wear overalls, eye face and hand protection. Objects such as bearings frequently break-up under load and the debris caused during break-up may cause damage and injury to unprotected parts of the body.

Never wear loose clothing, which could become trapped in the press and cause crushing injury to the hand, arms or other parts of the anatomy.

9. Support the bearing and housing on press bars, then press the shaft through the bearing and housing as shown below.

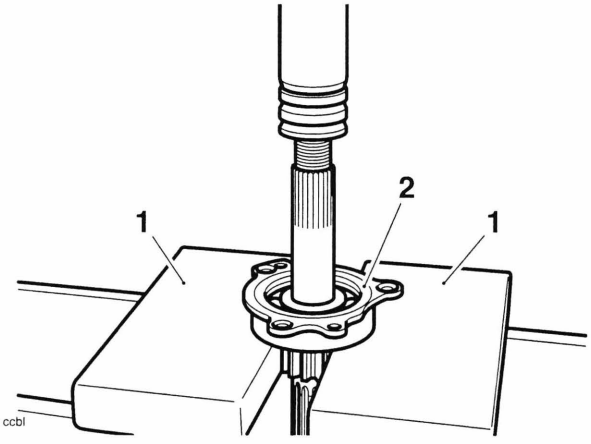

1. **Press bars**
2. **Bearing/housing**

10. Remove the snap-ring from the bearing housing.

⚠ Caution

When pressing the bearing out of the housing, never support the housing on its peripheral lugs, as they will break under the loads imparted by the press. Always support the housing on its outer circumference ensuring the maximum arc of that circumference is supported.

11. Support the outer circumference of the bearing housing on press bars, then press the bearing through the housing.

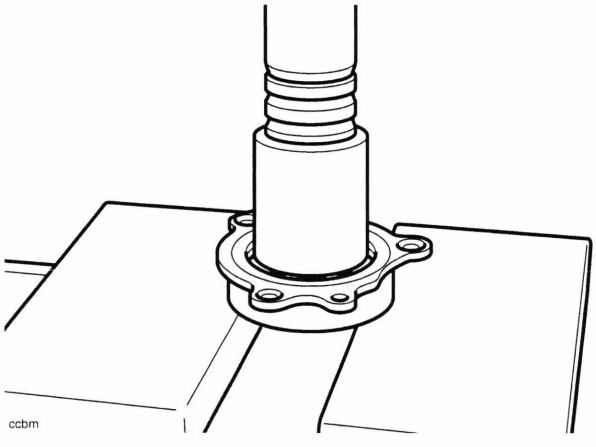

Pressing Out the Bearing

Inspection

1. Examine all gears, bearings and bushes and thrust washers for damage, distortion, chipped teeth and wear beyond the service limits. Replace all defective components and always use new circlips to assemble the shaft.
2. Thoroughly clean the bearing housing and inspect for damage, scoring and cracks. Replace the housing if necessary.

Assembly

Note:

- **Lubricate each gear, thrust washer and bush with clean engine oil during assembly.**

Note:

- **The circlips used on the input shaft have a flat side and an angled side. Illustrations throughout the assembly text indicate which orientation of each circlip is correct.**

⚠ Warning

When using a press, always wear overalls, eye face and hand protection. Objects such as bearings frequently break-up under load and the debris caused during break-up may cause damage and injury to unprotected parts of the body.

Never wear loose clothing, which could become trapped in the press and cause crushing injury to the hand, arms or other parts of the anatomy.

⚠ Caution

Bushes with oil holes must always be **MISALIGNED** with the corresponding oil holes in the output shaft. Reduced oil pressure and gear lubrication may result from alignment of the oil holes, which would cause premature wear of engine and transmission components.

⚠ Caution

Removing the input shaft bearing from the shaft and its housing will damage the bearing and snap ring. Never re-use removed bearings or snap rings as use of damaged or weakened components could lead to engine and transmission damage. Also, check for damage to the housing itself.

1. Position a new bearing to the housing.

⚠ Caution

Press only on the bearing outer race to prevent bearing damage.

2. Support the housing on press bars as shown below and press the bearing fully into the housing in the direction of the arrow.

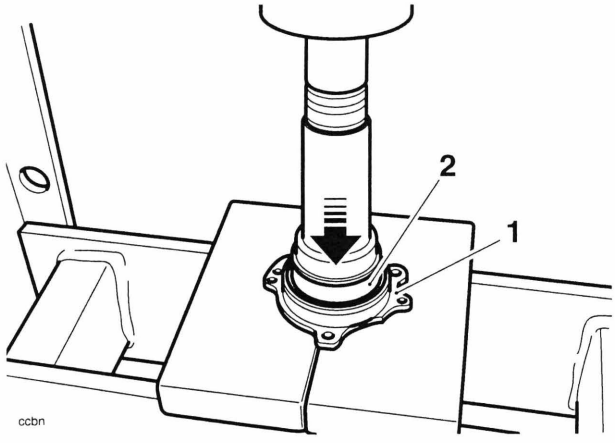

1. **Bearing housing**
2. **Bearing**

3. Retain the bearing with a new snap ring.

⚠ Caution

Press only on the bearing inner race to prevent bearing damage.

4. Locate the bearing and housing to the input shaft. Support the shaft on the press bed and press the bearing onto the shaft.

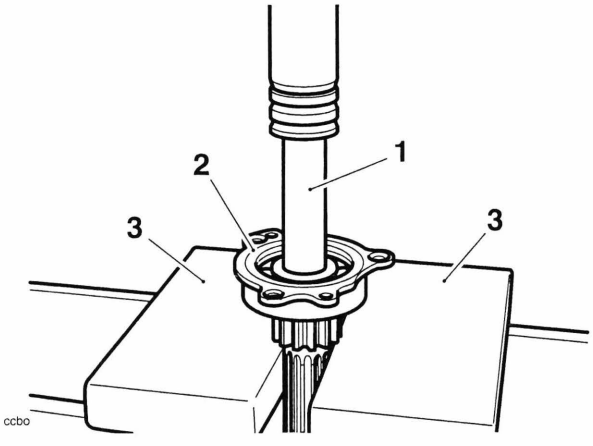

1. **Shaft**
2. **Bearing/housing**
3. **Press bars**

5. Working now on the opposite end to the bearing, slide on the thrust washer (6).
6. Fit the bush (9).
7. Fit the Belleville washers (7) over the bush, arranging them as shown below.

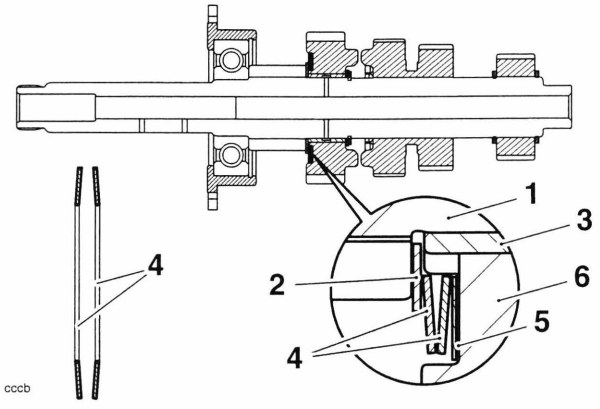

cccb

1. **Input shaft**
2. **Thrust washer**
3. **Fifth gear bush**
4. **Belleville washers**
5. **Shim**
6. **Fifth gear**

8. Fit fifth gear (8) and the fifth gear thrust washer (10).
9. Retain the assembly with a new circlip (11), orientating the circlip as shown below.

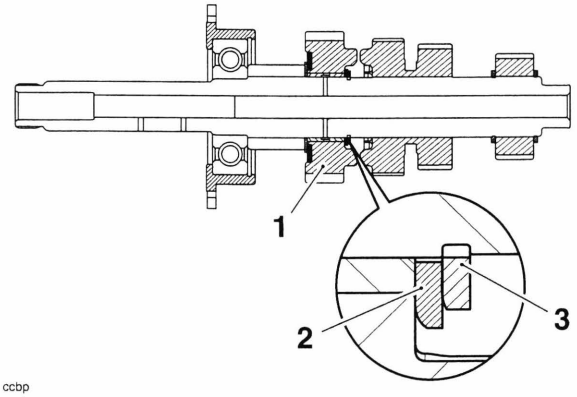

ccbp

1. **Fifth gear**
2. **Fifth gear thrust washer**
3. **Circlip**

10. Fit the third/fourth gear (12) to the shaft.
11. Retain third/fourth gear with a new circlip (13), orientating the circlip as shown below.

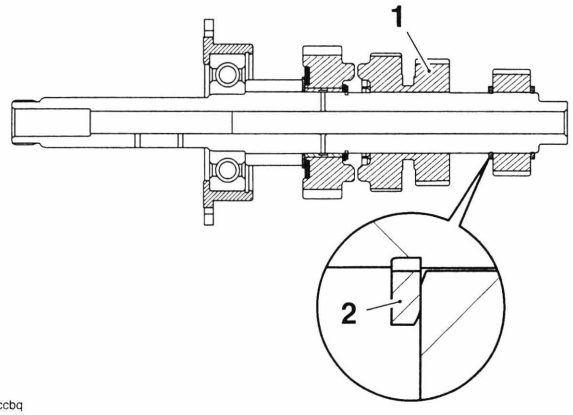

ccbq

1. **Third/fourth gear**
2. **Circlip**

12. Slide on second gear (14).
13. Retain second gear with a new circlip (13), orientating the circlip as shown below.

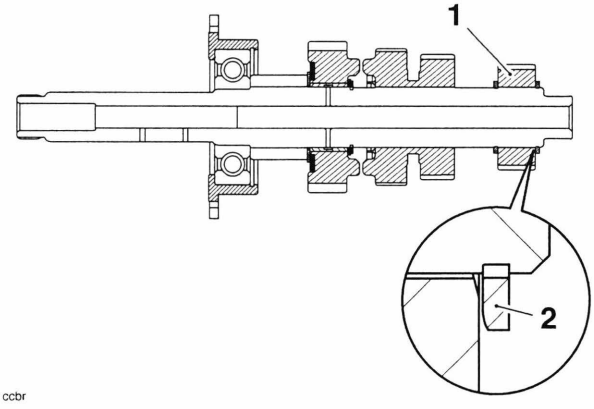

ccbr

1. **Second gear**
2. **Circlip**

This page intentionally left blank

9 Lubrication

Table of Contents

Exploded View – Sump – up to Engine Number 217501 ..... 9.2

Exploded View – Sump – from Engine Number 217502 ..... 9.3

Exploded View – Oil tank, filter and pumps 9.4

Oil Circuit 9.5

- General Description 9.5
- Scavenge System 9.5
- Pressure System 9.5

Engine Oil 9.6

- Specification 9.6
- Triumph Engine Oil 9.6
- Oil Level Inspection 9.6
- Oil and Oil Filter Change 9.7
- Disposal of Used Engine Oil and Oil Filters 9.8

Low Oil Pressure Warning Light Switch 9.9

- Removal 9.9
- Installation 9.10

Sump 9.10

- Removal 9.10
- Inspection 9.10
- Installation 9.11

Oil Pumps 9.12

- Removal 9.12
- Inspection 9.13
- Installation 9.14
- Oil Non-Return Valve 9.15
- Oil Pressure Relief Valve 9.16

Oil Tank 9.16

- Removal 9.16
- Inspection 9.17
- Installation 9.17
- Oil Transfer Pipes 9.17

Exploded View – Sump – up to Engine Number 217501

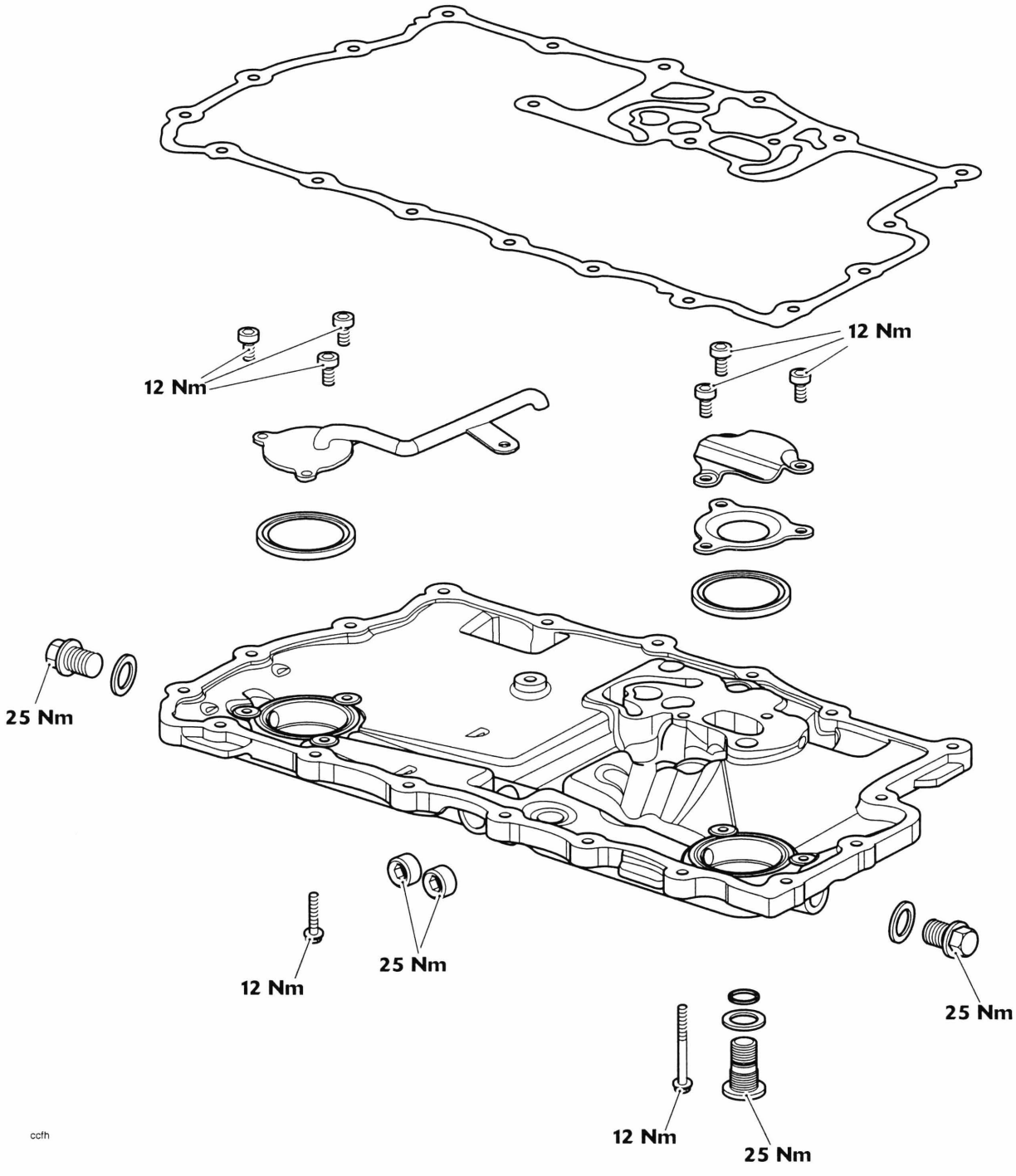

Exploded View – Sump – from Engine Number 217502

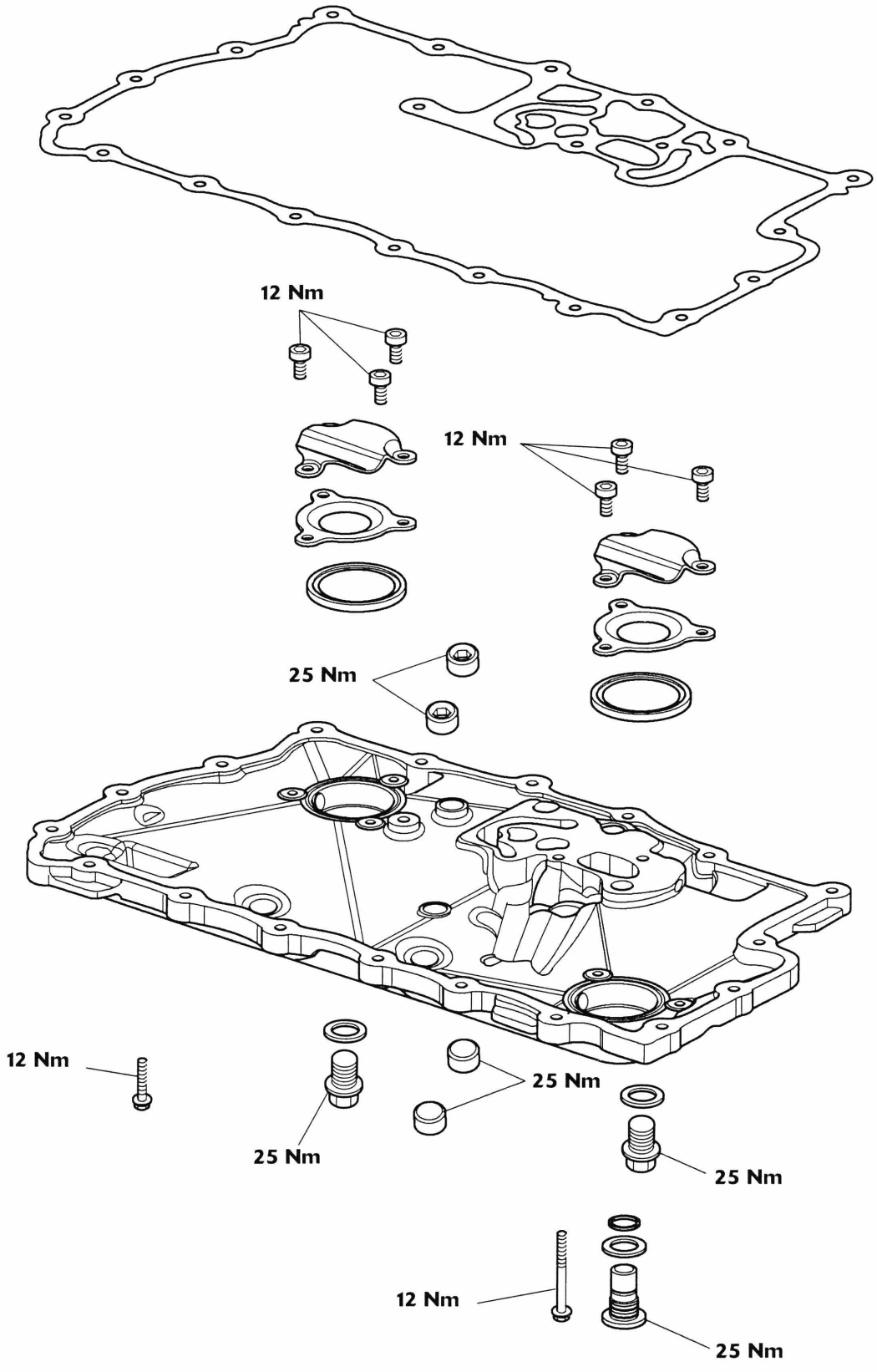

Exploded View – Oil tank, filter and pumps

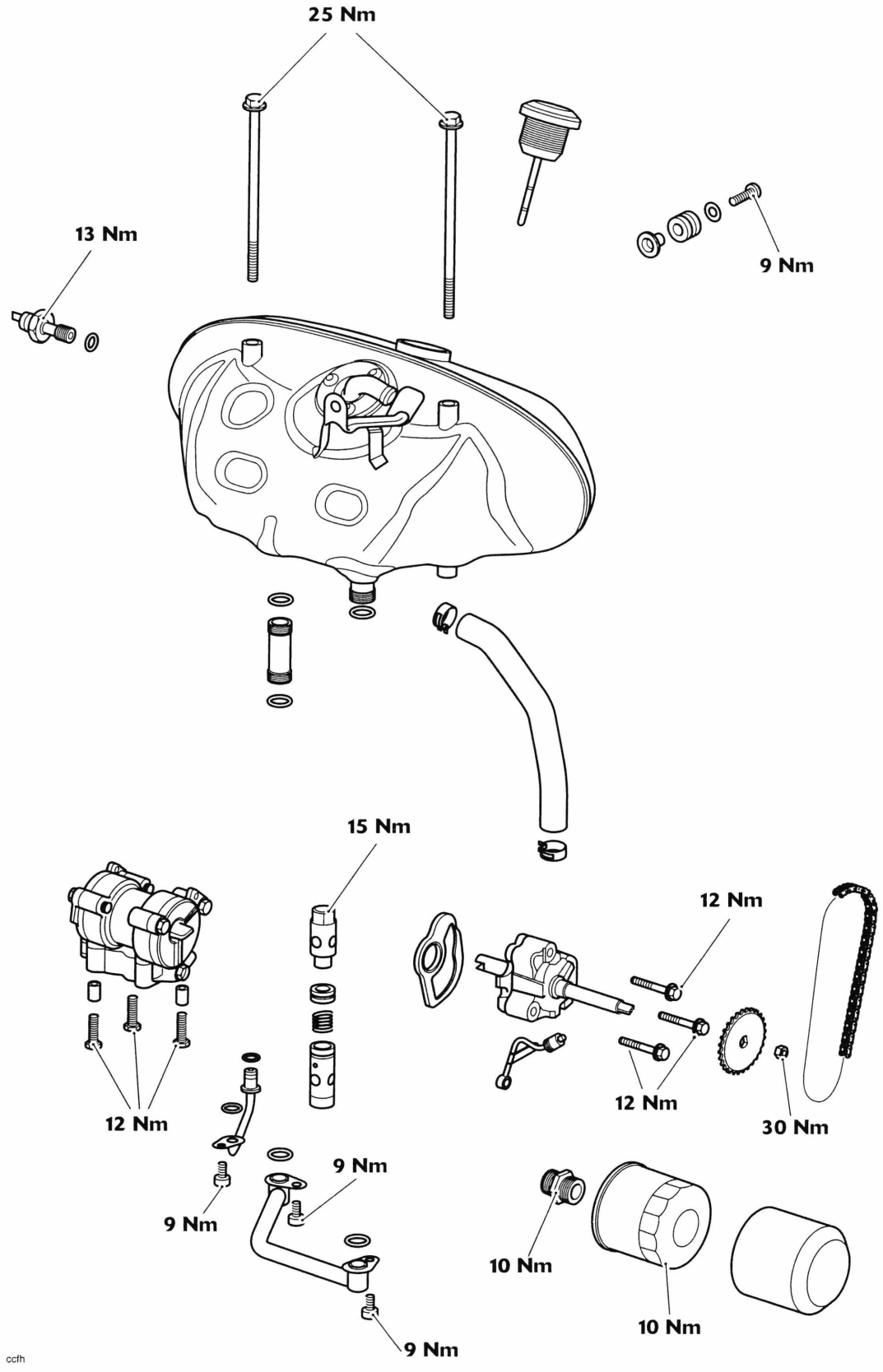

Oil Circuit

General Description

The Rocket III utilises a dry sump lubrication system whereby a pressure pump takes oil from an oil tank and delivers oil under pressure to the engine and transmission. A scavenge pump collects oil from the sump and returns it to the oil tank.

The oil tank is attached to the upper crankcase on the left hand side of the motorcycle. Situated within the lower crankcase, the pressure pump is gravity fed from the oil tank via an internal drilling. An oil tank drain plug is situated at the lowest point in the drilling, in the sump itself.

Scavenge System

Pick-ups from the double-ended scavenge pump collect oil from the front and rear of the sump and return it to the oil tank. Further drain plugs are fitted to the front and rear of the sump to drain residual oil from the sump.

Pressure System

From the pressure pump, the oil is delivered along an internal passage, past the oil pressure relief valve. The oil pressure relief valve relieves excess oil pressure by allowing oil to return to the sump. Once past the oil pressure relief valve, the pressurised oil goes through a one-way valve whose purpose is to prevent the oil in the tank from draining into the lower crankcase area.

From the one-way valve, the oil is passed through the oil filter. Filtered oil is fed directly to the main oil gallery for distribution. Drillings from the main oil gallery feed oil to the four crankshaft main bearings. There are also three piston oil jets, located in the main bearing housings which lubricate and cool the pistons.

Oil is also fed from the main oil gallery, through internal drillings and pipes, to the transmission. The transmission input shaft is both drilled through its entire length and cross-drilled. The cross drillings provide oil directly to the gears, selector forks and bearings. Oil flowing through the centre of the shaft exits at the clutch end, to provide oil to the clutch assembly. A spray jet for the outside of the clutch is mounted directly to the pressure pump. The torsional damper shaft is also fed from the input shaft. The torsional damper shaft is cross-drilled to feed the gears, bushes and other running surfaces. An internal passageway carries oil to the output shaft bearing and then on to the output shaft. The output shaft is also cross-drilled to carry oil to the gears, selector forks and bearings.

The cylinder head is fed via an internal drilling coming from number 4 main bearing. Within the cylinder head, a passageway through the camshaft ladder feeds oil to the camshaft bearings, and spills oil onto the tappet buckets and the valves. Spill oil returns via the camshaft drive chain area to the sump, lubricating the camshaft drive chain in the process. Also located off the cylinder head supply is an oil jet which cools the alternator. The low oil pressure warning switch is located at the rear of the cylinder head.

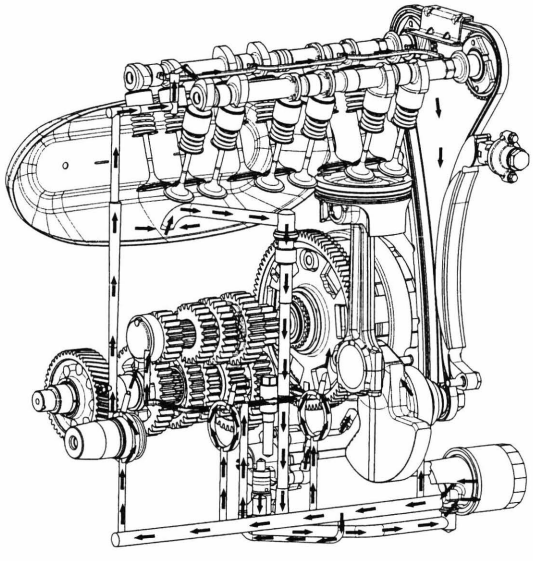

PRESSURE SYSTEM

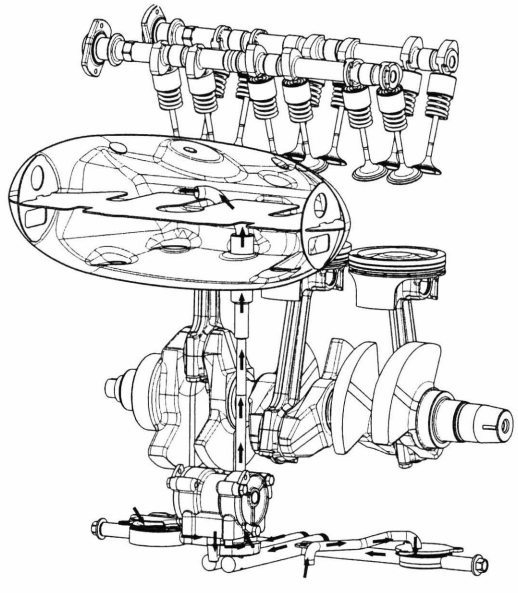

SCAVENGE SYSTEM

ccrtk

Engine Oil

Specification

Use semi or fully synthetic 10W/40 or 15W/50 motorcycle engine oil which meets specification API SH (or higher) and JASO MA, such as Castrol Power 1 Racing 4T, sold as Castrol Power RS Racing 4T in some countries.

⚠ Caution

Triumph high performance fuel injected engines are designed to use semi or fully synthetic motorcycle engine oil that meet specification API SH (or higher) AND JASO MA.

Do not add any chemical additives to the engine oil. The engine oil also lubricates the clutch and any additives could cause the clutch to slip.

Do not use mineral, vegetable, non-detergent oil, castor based oils or any oil not conforming to the required specification. The use of these oils may cause instant, severe engine damage.

Ensure no foreign matter enters the oil tank during an oil change or top-up.

Triumph Engine Oil

Your Triumph Motorcycle is a high-quality product which has been carefully built and tested to exacting standards. Triumph Motorcycles are keen to ensure that you enjoy optimum performance from your machine and with this objective in mind have tested many of the engine lubricants currently available to the limits of their performance.

Oil Level Inspection

In order for the engine, transmission, and clutch to function correctly, maintain the engine oil at the correct level, and change the oil and oil filter in accordance with scheduled maintenance requirements.

⚠ Warning

Motorcycle operation with insufficient, deteriorated, or contaminated engine oil will cause accelerated engine wear and may result in engine or transmission seizure. Seizure of the engine or transmission may lead to sudden loss of control and an accident.

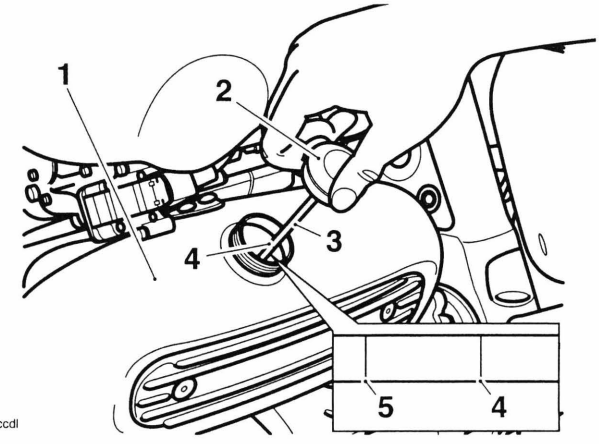

1. **Oil tank**
2. **Oil tank cap**
3. **Dipstick**
4. **Maximum mark**
5. **Minimum mark**

⚠ Caution

Ensure no foreign matter or contamination enters the oil tank during an oil change or top-up. Contamination entering the oil tank may lead to engine damage.

1. Allow the engine to idle for one minute, then stop the engine.
2. Remove the filler cap/dipstick from the oil tank, wipe the dipstick clean and refit the filler cap, pushing it fully home.

Note:

- **The actual level is indicated when the motorcycle is upright, (not on the side stand) and when the filler cap/dipstick has been pushed fully home.**

3. Remove the filler cap/dipstick.
4. The maximum oil level is indicated by marks on the filler cap/dipstick. When the oil level is correct, the indicated oil level must be between the maximum and minimum lines on the dipstick.
5. If the oil level is too low, add oil a little at a time until the correct level is reached.
6. Once the correct level is reached, fit the filler cap/dipstick.

Oil and Oil Filter Change

The engine oil and filter must be replaced in accordance with scheduled maintenance requirements. Because this motorcycle has a dry-sump lubrication system, the oil change procedure differs from those many will be familiar with. This is because the majority of the oil is contained in the oil tank on the left side of the engine, not in the sump. To change the engine oil and filter, follow the instructions below/over.

⚠ Warning

Prolonged or repeated contact with engine oil can lead to skin dryness, irritation and dermatitis. In addition, used engine oil contains harmful contamination that can lead to skin cancer. Always wear suitable protective clothing and avoid skin contact with used oil.

Allow the engine to idle briefly, then stop the engine and secure the motorcycle in an upright position.

1. Place an oil drain pan beneath the engine.

⚠ Warning

The oil and filter may be hot to the touch. Contact with hot oil may cause the skin to be scalded or burned.

2. Remove the oil tank drain plug from the bottom of the sump and allow the oil tank to drain.

Drain Plug Locations up to Engine Number 217501

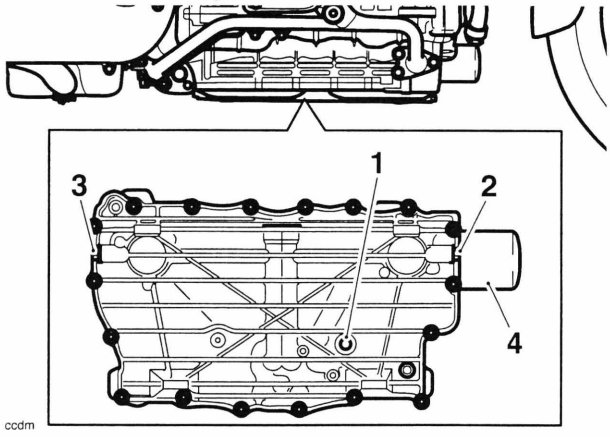

1. **Oil tank drain plug**
2. **Front sump drain plug**
3. **Rear sump drain plug**
4. **Oil filter cover**

Drain Plug Locations from Engine Number 217502

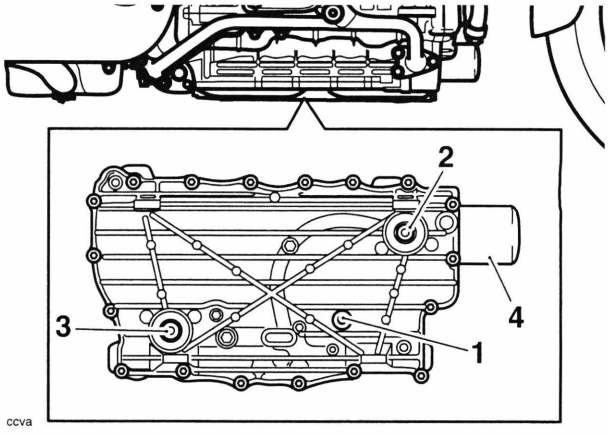

1. **Oil tank drain plug**
2. **Front sump drain plug**
3. **Rear sump drain plug**
4. **Oil filter cover**

Note:

- **Removal of the oil tank drain plug allows the oil to drain from the oil tank, not the sump. In order to drain the one or two litres of oil left in the sump, the front and rear sump plugs must also be removed.**

3. Incorporating a new washer, refit the oil tank drain plug, tightening it to **25 Nm**.
4. Position the oil drain pan towards the front of the engine, remove the front sump drain plug and allow the oil to drain. This will drain the oil remaining in the front part of the sump.
5. Incorporating a new washer, refit the front sump plug, tightening it to **25 Nm**.

6. Position the oil drain pan towards the rear of the engine, remove the rear sump plug and allow the remaining oil to drain. This will drain any oil remaining in the rear part of the sump.
7. Incorporating a new washer, refit the rear sump plug. Tighten to **25 Nm**.
8. Remove the oil filter cover by pulling it gently towards the front of the motorcycle.

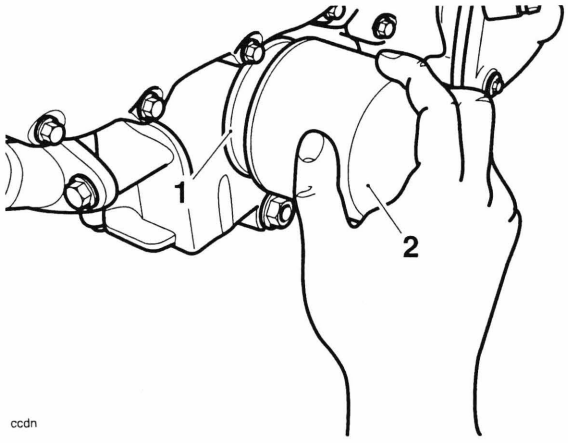

ccdn

1. Oil filter
2. Oil filter cover

9. Position the oil drain pan beneath the oil filter.
10. Unscrew and remove the oil filter using Triumph service tool T3880313. Dispose of the old filter in an environmentally friendly way.

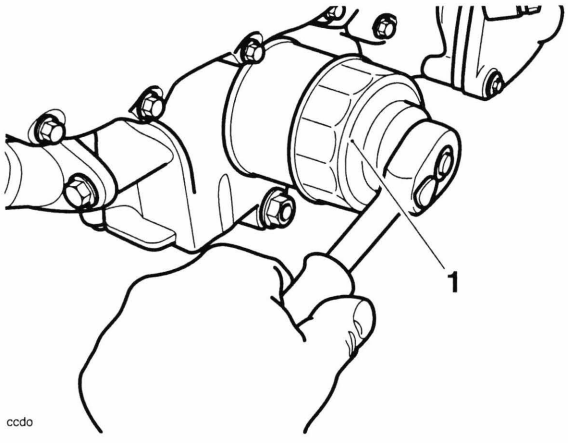

ccdo

1. Tool T3880313

11. Apply a thin smear of clean engine oil to the sealing ring of the new oil filter. Fit the oil filter and tighten to **10 Nm**.
12. Fill the engine to the maximum mark with a 10W/40 or 15W/50 semi or fully synthetic motorcycle engine oil that meets specification API SH (or higher) and JASO MA.
13. Start the engine and allow it to idle for a minimum of one minute.

⚠ Caution

Raising the engine speed above idle before the oil reaches all parts of the engine can cause engine damage or seizure. Only raise engine speed after running the engine for a few seconds to allow the oil to circulate fully.

⚠ Caution

If the engine oil pressure is too low, the low oil pressure warning light will illuminate. If this light stays on when the engine is running, stop the engine immediately and investigate the cause. Running the engine with low oil pressure will cause engine damage.

14. Ensure that the low oil pressure warning light extinguishes shortly after starting.
15. Turn off the ignition, check the oil level using the method previously described, and top-up to between the minimum and maximum marks.

Note:

- **When the engine is first started after an oil and filter change, at least 1 to 1.5 litres of oil will be required to top-up the oil tank to the correct level.**

Disposal of Used Engine Oil and Oil Filters

To protect the environment, do not pour oil on the ground, down sewers or drains, or into watercourses. Do not place used oil filters in with general waste. If in doubt contact your local authority.

Low Oil Pressure Warning Light Switch

Note:

- **The low pressure warning light switch may be removed after first removing the rider's seat and disconnecting the battery leads, negative (black) lead first. The low oil pressure warning light switch is located at the rear of the cylinder head.**

⚠ Warning

Prolonged or repeated contact with engine oil can lead to skin dryness, irritation and dermatitis. Furthermore, used engine oil contains potentially harmful contaminants that can cause cancer.

When handling used engine oil, always wear protective clothing and avoid any skin contact with the oil.

⚠ Caution

Do not pour engine oil on the ground, down sewers or drains, or into watercourses. To prevent pollution of watercourses, etc., dispose of used oil sensibly. If in doubt contact your local authority.

Removal

1. Remove the seat (see page *17-18* for Rocket III and Classic, see page *17-19* for Rocket III Touring).
2. Disconnect the battery, negative (black) lead first.
3. Remove the right hand engine in-fill panel (see page *17-21*).
4. Remove the fuel tank (see page *11-123* for Rocket III and Classic, see page *11-126* for Rocket III Touring).
5. Remove the intake duct (see page *11-139*).
6. Withdraw the rubber boot from the low oil pressure warning light switch.

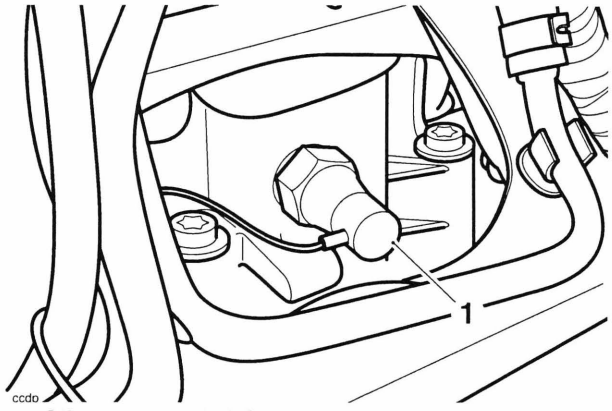

1. Oil pressure switch boot

7. Unscrew the electrical connection.

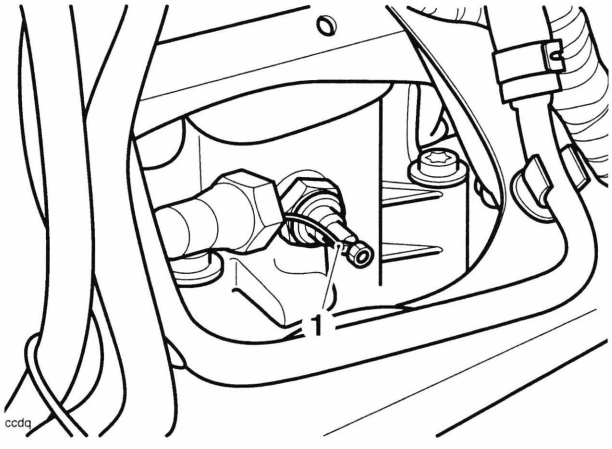

1. Oil pressure switch connection

Note:

- **A small amount of oil will drain from the oil gallery when the switch is removed.**

8. Position a suitable receptacle to collect any displaced oil from the oil gallery.
9. Unscrew and remove the switch.

Installation

1. Incorporating a new sealing washer, fit the low oil pressure light switch, tightening it to **13 Nm**.

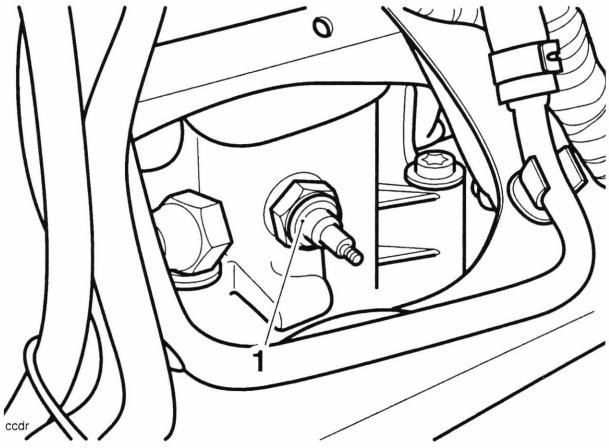

1. Low oil pressure warning light switch

2. Connect the wire to the switch and secure with the small screw.
3. Refit the boot.
4. Refit the intake duct (see page *11-146*).
5. Refit the fuel tank (see page *11-124* for Rocket III and Classic, see page *11-127* for Rocket III Touring).
6. Fit the right hand engine infill panel (see page *17-21*).
7. Reconnect the battery, positive (red) lead first.
8. Refit the seat (see page *17-18* for Rocket III and Classic, see page *17-19* for Rocket III Touring).

Sump

Removal

1. Remove the rider's seat (see page *17-18* for Rocket III and Classic, see page *17-19* for Rocket III Touring).
2. Disconnect the battery, negative (black) lead first.

Warning

Prolonged or repeated contact with engine oil can lead to skin dryness, irritation and dermatitis. Furthermore, used engine oil contains potentially harmful contaminants that can cause cancer. When handling used engine oil, always wear protective clothing and avoid any skin contact with the oil.

Caution

Do not pour engine oil on the ground, down sewers or drains, or into watercourses. To prevent pollution of watercourses, etc., dispose of used oil sensibly. If in doubt contact your local authority.

3. Drain the engine oil (see page *9-7*).
4. Remove the sump bolts and lower the sump from the crankcase. Discard the sump gasket.

Inspection

Warning

Ensure the oil pick-ups are clean and free of blockages or restrictions. If the oil flow is restricted, oil pressure will be reduced and may cause severe engine damage.

Caution

If the oil pick-ups are removed, always use new pick-up bolts during re-assembly. Use of the original bolts may lead to pick-up detachment leading to severe engine damage.

1. Check the oil pick-ups for blockages or restrictions. Remove and clean if found to be blocked or restricted.

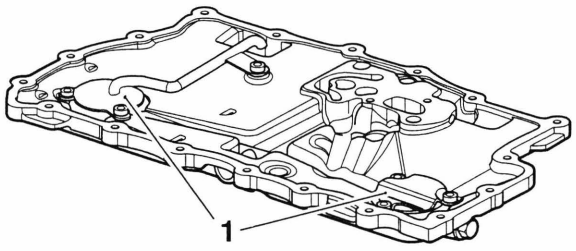

1. Oil pick-ups - up to engine number 217501

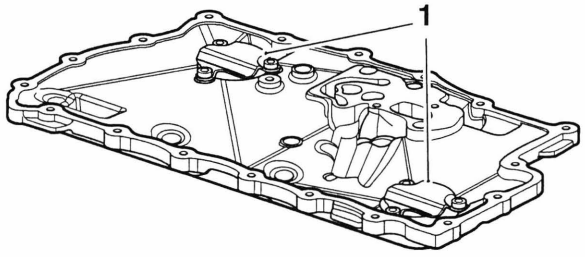

1. Oil pick-ups - from engine number 217502

Note:

- **If the oil pick-ups are removed, these must be refitted using new bolts, tightened to 12 Nm.**

Installation

1. Position a new sump gasket to the sump and locate to the crankcase.
2. Fit the bolts and tighten as described below;
   - tighten the bolts in the sequence shown below. to **12 Nm**;
   - Re-tighten bolts one and two again to **12 Nm**.

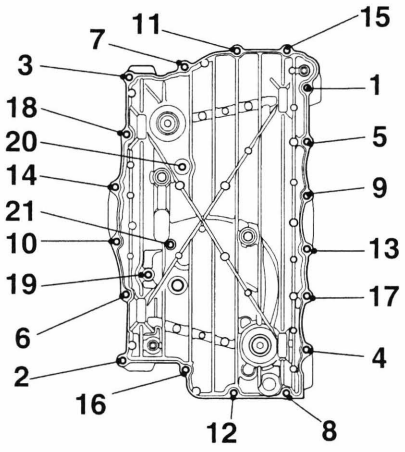

Tightening Sequence

3. Refill the oil tank (see page *9-7*).
4. Reconnect the battery, positive (red) lead first.
5. Refit the seat (see page *17-18* for Rocket III, Classic and Roadster, see page *17-19* for Rocket III Touring).

Oil Pumps

Note:

- **Two oil pumps are fitted to this model. A pressure pump to supply oil under pressure to various parts of the engine, and a twin-rotor scavenge pump to return oil to the oil tank from the sump.**

Warning

Prolonged or repeated contact with engine oil can lead to skin dryness, irritation and dermatitis. Furthermore, used engine oil contains potentially harmful contaminants that can cause cancer. When handling used engine oil, always wear protective clothing and avoid any skin contact with the oil.

Caution

Do not pour engine oil on the ground, down sewers or drains, or into watercourses. To prevent pollution of watercourses etc., dispose of used oil sensibly. If in doubt contact your local authority.

Removal

Note:

- **Only the pressure pump can be removed with the engine in the frame. If removing the pressure pump, remove the clutch cover (see page *4-7*).**

Note:

- **To remove the scavenge pump, the engine must be removed and the crankcase halves must be separated. The following instructions describe the procedure for removal of both pumps simultaneously.**

1. Remove the engine from the frame (see page *10-2*).
2. Remove the clutch assembly (see page *4-7*).
3. Prevent the oil pump drive sprocket from turning using a hand-hold only. Remove the locknut from the drive sprocket shaft.

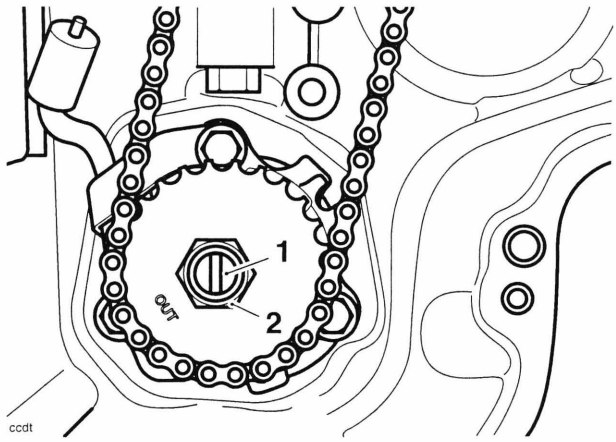

1. Drive sprocket shaft
2. Locknut

4. Remove the pump sprocket, drive sprocket and chain as one item by sliding them forward.
5. Note the position of the spray bar before releasing the bolts securing the pressure pump and spray bar to the crankcase. Withdraw the pressure pump and spray bar.

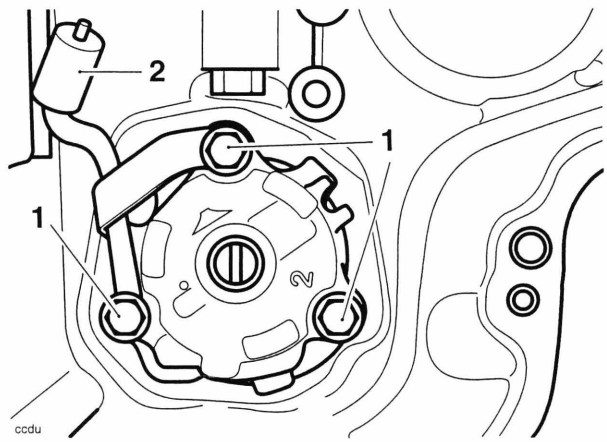

1. Pressure pump bolts
2. Spray bar

6. Recover the mesh filter situated between the pressure pump and crankcase.

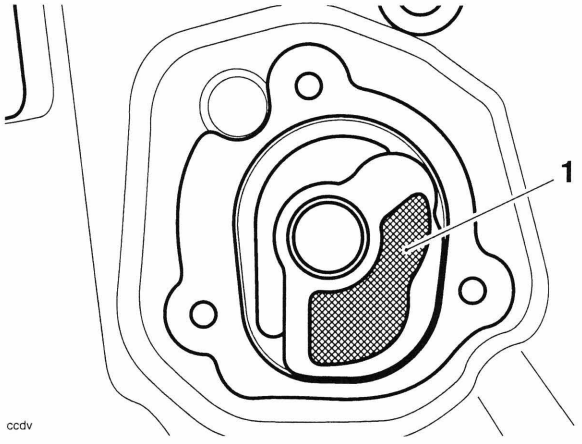

1. Mesh filter

7. Separate the crankcase halves (see page *5-5*).
8. Release and discard the screws that secure the scavenge pump to the lower crankcase.

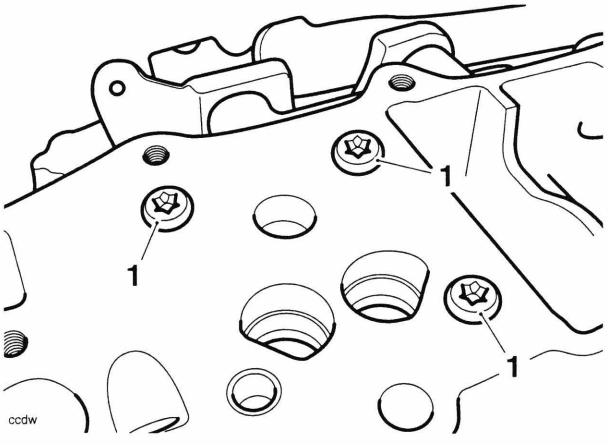

1. Scavenge pump screws

9. Ease the pump from its dowels and withdraw it from the crankcase.

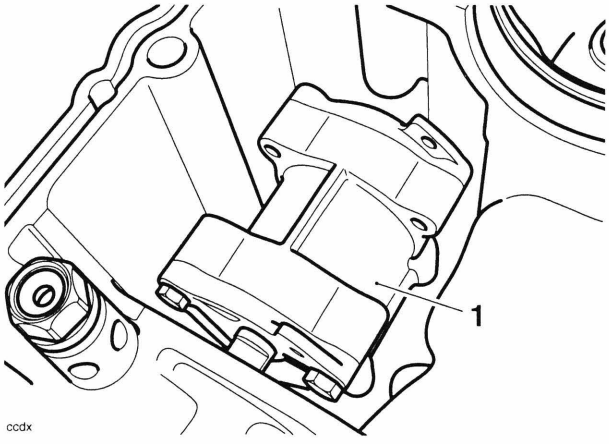

1. Scavenge pump

Inspection

⚠ Caution

If any part of either of the oil pumps is found to be outside the service limit, the complete pump must be replaced. Severe engine damage may result from the continued use of a faulty oil pump.

Clearances

Item (both pumps)	Standard	Service limit
Oil pump rotor tip clearance	0.15 mm	0.30 mm
Oil pump body clearance	0.15 – 0.22 mm	0.35 mm
Oil pump rotor end float	0.02 – 0.07 mm	0.10 mm

1. Measure the rotor tip clearance using feeler gauges.

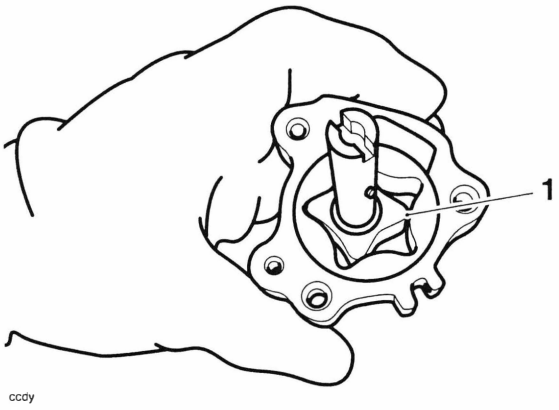

1. Rotor tip clearance

2. Measure the pump body clearance using feeler gauges.

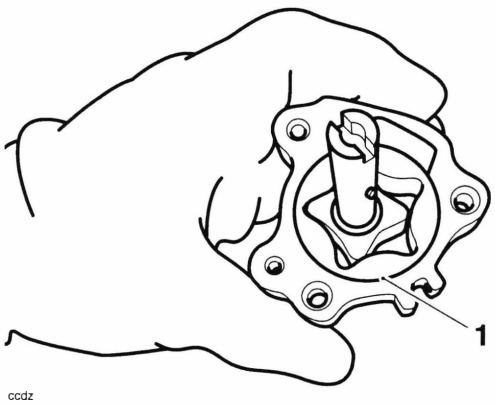

1. Pump body clearance

3. Measure the pump end clearance.
4. Clearances:
   a) If all clearances are within service limits, liberally apply clean engine oil to all internal components and refit the oil pump plate to the oil pump body.
   b) If any clearance measured is outside the service limits, renew the complete pump.
5. Inspect the sprockets and chain for wear and/or damage. Replace the sprocket and chain if wear and/or damage is found.

Installation

⚠ Caution

As a precaution, before fitting the oil pumps to the crankcase ensure the pump internal surfaces have been 'wetted' with clean engine oil. The pumps may fail to pick-up oil from the sump if the surfaces have not been 'wetted'. This will cause the engine to run without engine oil pressure and will lead to severe engine damage.

1. Fill the oil pumps with new engine oil, turning the pump rotors as the oil is poured in ensuring all of the contact surfaces are coated with oil.
2. Position the scavenge pump to the crankcase and engage it to the mounting dowels. Ensure the drive blade is facing towards the front of the engine.

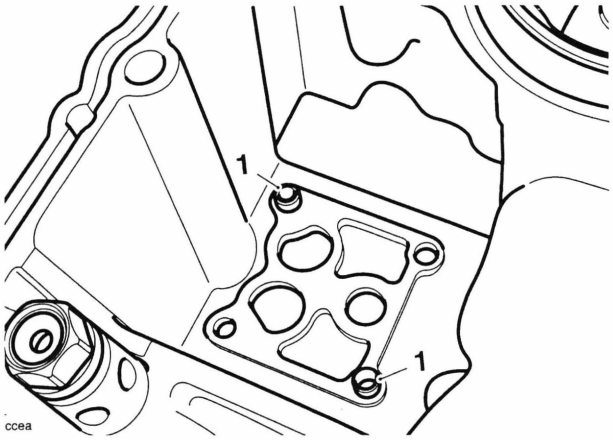

1. Mounting dowels

3. Fit and tighten new scavenge pump screws to **12 Nm**.

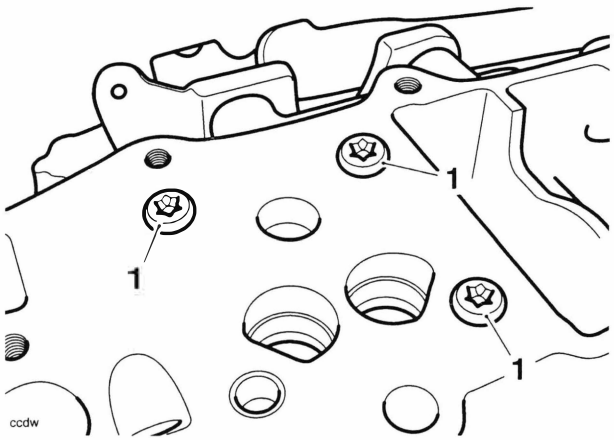

1. Scavenge pump screws

4. Position the pressure pump and spray bar to the crankcase, aligning the drive blade on the scavenge pump with the drive slot on the pressure pump.

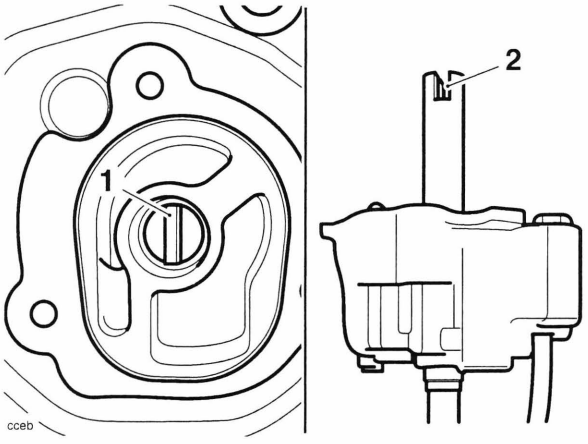

1. Scavenge pump – drive blade
2. Pressure pump – drive slot

5. Clean and examine the mesh filter for the pressure pump before refitting it to the crankcase. Replace the filter if blocked, split or damaged in any way.

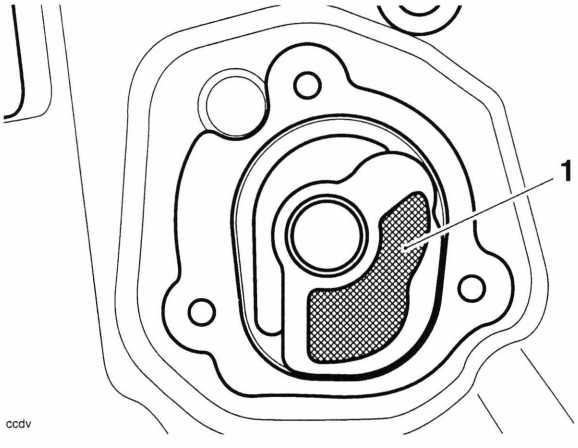

1. Mesh filter

6. Fit and tighten the pressure pump and spray bar screws to **12 Nm**.
7. Assemble the crankcase halves (see page *5-8*).
8. Assemble the pump sprocket and drive socket to the chain ensuring the 'OUT' mark on the pump socket is facing outwards.

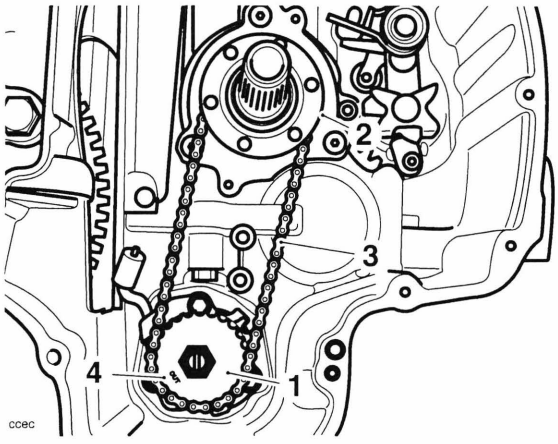

1. Pump sprocket
2. Drive sprocket
3. Chain
4. 'OUT' mark

9. Secure the pump sprocket to the pump shaft with a new locknut. Tighten the nut to **30 Nm**.
10. Install the engine in the frame (see page *10-5*).

Oil Non-Return Valve

The oil non-return valve, which prevents oil from draining from the oil tank while the engine is not running, is located in the lower crankcase. It can be removed by easing it gently from the crankcase against the O-ring that seals it.

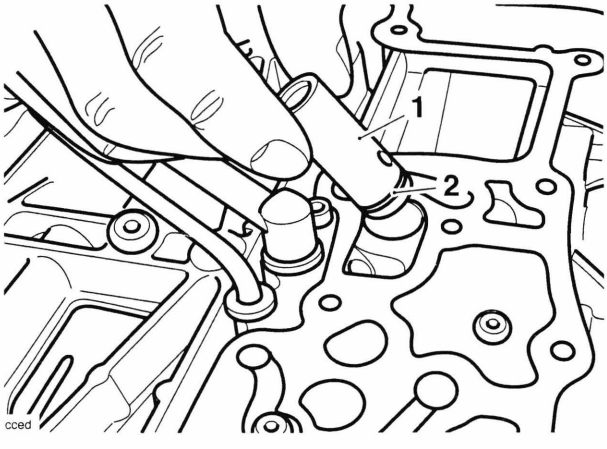

1. Oil non-return valve
2. O-ring

Oil Pressure Relief Valve

The oil pressure relief valve is located in the lower crankcase, adjacent to the scavenge pump. It is a threaded fit in the crankcase.

1. Thoroughly clean the threads of the pressure relief valve and the crankcase.
2. Apply one drop of ThreeBond 1305 to the thread of the pressure relief valve.
3. Tighten the pressure relief valve to **15 Nm**.

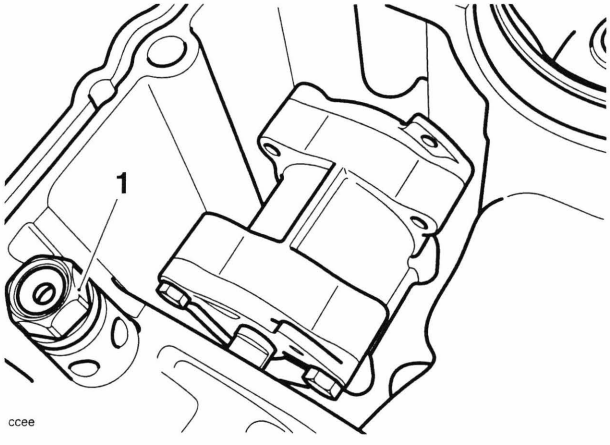

1. Oil pressure relief valve

Oil Tank

Removal

1. Remove the throttle bodies (see page *11-165*).
2. Drain the oil tank (see page *9-7*).
3. Release the spring clip securing the breather hose to the tank. Detach the hose and remove the tank.

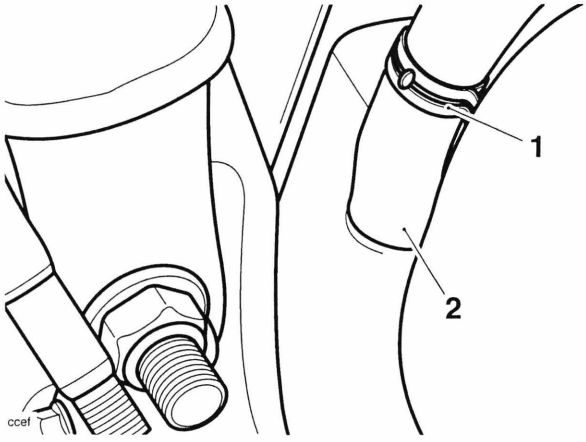

1. Hose clip
2. Hose

4. Release the three bolts securing the oil tank to the upper crankcase.
5. Ease the oil tank upwards to detach it from the gallery in the crankcase.
6. Remove the link tube from the crankcase by pulling gently upwards.
7. Remove the two crankcase to oil tank adapters.

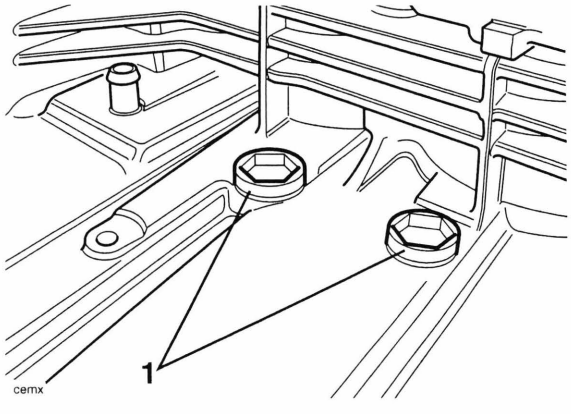

1. Crankcase to oil tank adapters

8. Remove and discard the copper washers.

Inspection

1. Check the tank for damage, deformation and splits. Replace the tank as necessary.
2. Check the breather hose for damage, splits and signs of collapse. Replace the hose as necessary.
3. Thoroughly clean the tank inside and out. Ensure no debris remains inside the tank.

Installation

1. Fit new copper washers for the crankcase to oil tank adapters.
2. Fit the crankcase to oil tank adapters and tighten to **45 Nm**.
3. Fit new O-rings to the oil tank outlet and both ends of the link tube. Lubricate the O-rings with engine oil or petroleum jelly.
4. Refit the link tube to the upper crankcase.
5. Position the tank to the upper crankcase and link tube.
6. Locate the oil tank outlet to the link tube ensuring the O-ring is not damaged or dislodged during fitment.
7. Fit and tighten the oil tank screws to **25 Nm** (vertical fixings) and **9 Nm** (horizontal fixing).
8. Attach the breather hose and attach the spring clip.
9. Refit the throttle bodies (see page *11-167*).
10. Refill the tank and engine with oil (see page *9-7*).

Oil Transfer Pipes

Oil transfer pipes are fitted to the lower crankcase to transfer oil to the transmission.

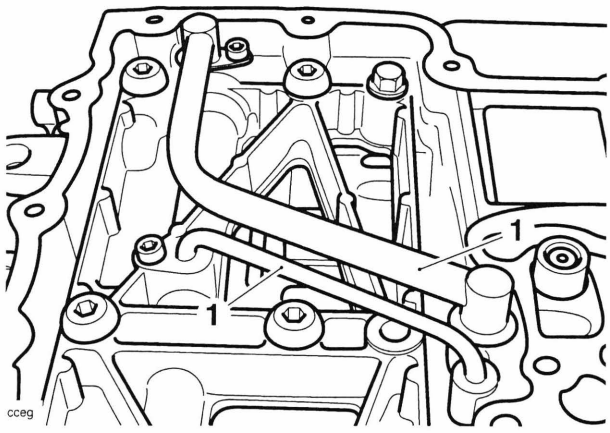

1. Oil transfer pipes

Each pipe is retained by a screw at one end and is sealed at both ends by O-rings. If the pipes are removed, always renew the O-rings and screws, and tighten the screws to **9 Nm**.

This page intentionally left blank

10 Engine Removal and Refit

Table of Contents

Removal 10.2

Installation 10.5

Removal

Warning

Before starting work, ensure the motorcycle is stabilised and adequately supported. This will help prevent it from falling and causing injury to the operator or damage to the motorcycle.

To gain access to the engine for removal:

1. Raise and securely support the motorcycle and engine.
2. Remove the seat (see page *17-18* for Rocket III, Classic and Roadster, see page *17-19* for Rocket III Touring).
3. Disconnect the battery, negative (black) lead first, then remove it (see page *18-19*).
4. Remove the left and right side panels (see page *17-20*).
5. Drain the engine oil (see page *9-7*).
6. Remove the fuel tank (see page *11-123* for Rocket III, Classic and Roadster, see page *11-126* for Rocket III Touring).
7. Disconnect the throttle cables (see page *11-156*).
8. Remove the exhaust header system (see page *11-179* for Rocket III, Classic and Roadster, see page *11-182* for Rocket III Touring).

Note:

- **For Rocket III and Classic only: The catalyst box and silencers can remain in place.**
- **For Rocket III Touring only: The exhaust link box and silencers can remain in place.**

9. Remove the radiator (see page *12-13*).
10. Remove the throttle bodies and intake hose (see page *11-165*).
11. Remove the oil tank (see page *9-16*).
12. Remove the rear wheel (see page *16-13* for Rocket III and Classic, see page *16-15* for Rocket III Touring).
13. Remove the swinging arm, bevel box and rear suspension units (see section *6*).
14. Remove the front wheel (see page *16-8* for Rocket III, Classic and Roadster, see page *16-10* for Rocket III Touring).
15. Remove the front mudguard (see page *17-24* for Rocket III, Classic and Roadster, see page *17-25* for Rocket III Touring).
16. Remove the rear brake master cylinder heel guard.

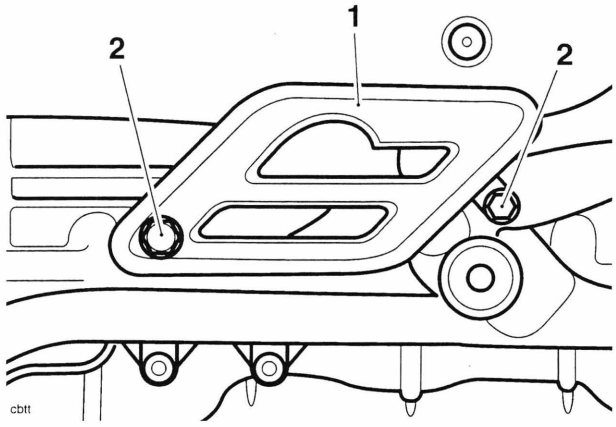

1. Heel guard
2. Heel guard fixings

Note:

- **Rocket III shown, Rocket III Classic and Touring are similar.**

17. Remove the clip from the rear brake pedal clevis pin. Remove the clevis pin.

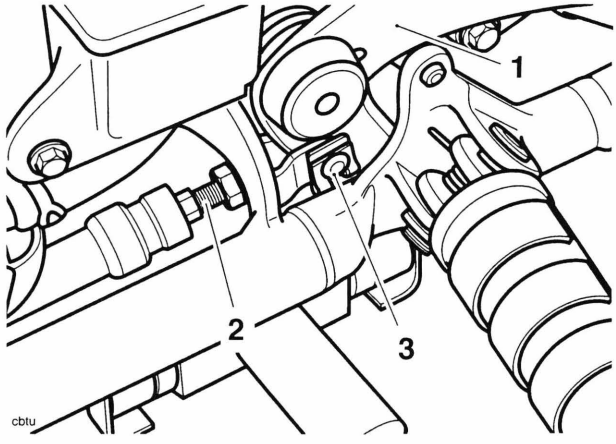

1. Pedal
2. Pushrod
3. Clevis pin

Note:

- **Rocket III shown, Rocket III Classic, Touring and Roadster are similar.**

18. Temporarily support the rear brake master cylinder then remove the bolts securing it to the footrest mounting bar.

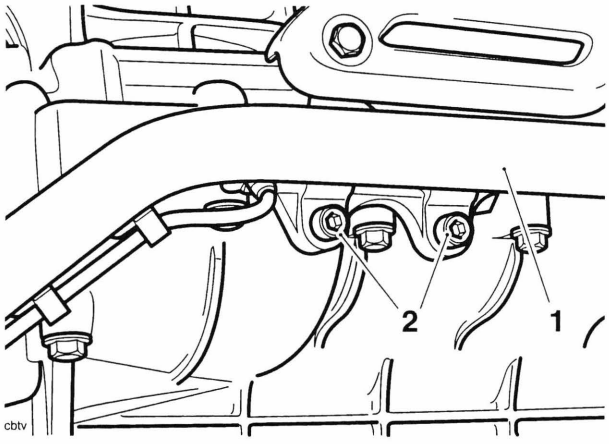

1. Footrest mounting bar
2. Master cylinder bolts

Note:

- **It is not necessary to disconnect the brake pipe from the master cylinder.**

19. **For Rocket III Classic only:** Unclip the brake pipe.

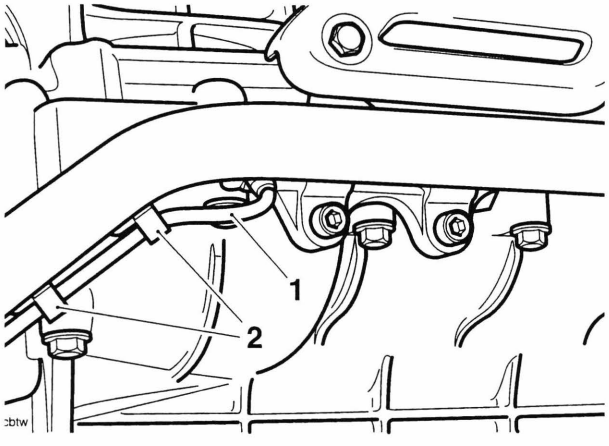

1. Brake pipe
2. Clips

20. Remove the heat shield from the brake pipe joint.

21. Release the fixing securing the brake pipe joint to the frame outrigger.

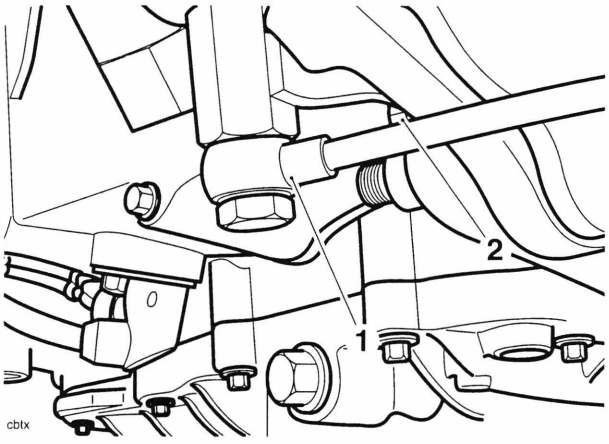

1. Brake pipe joint
2. Bolt

22. Detach the five bolts securing the footrest mounting bar to the frame and crankcase. Detach the bar.

⚠ Caution

When repositioning the rear brake master cylinder, take care to prevent the steel brake pipe from becoming distorted.

23. Position the master cylinder, brake pipe and joint in a safe place, preventing the brake fluid reservoir from becoming inverted.

24. **For Rocket III only:** Select neutral and note the position of the gear change crank relative to the selector shaft.

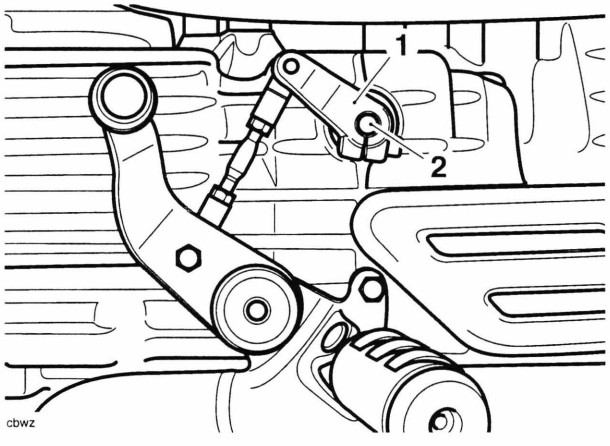

1. Gear change crank
2. Selector shaft

25. **For Rocket III Classic and Touring only:** Select neutral and note the position of the gear change crank relative to the selector shaft.

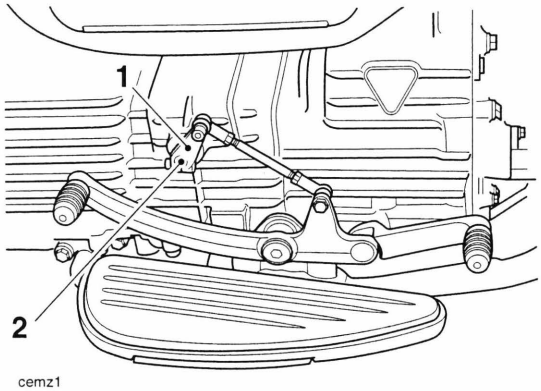

cemz1

1. Gear change crank
2. Selector shaft

26. Remove the bolt from the gear change crank. Detach the crank.
27. Release the bolts securing the left hand footrest mounting bar to the frame and engine. Detach the bar.
28. Noting their respective positions, disconnect the spark plug leads from the spark plugs.
29. Disconnect the side stand switch.
30. Remove the side stand complete with its mounting bracket.

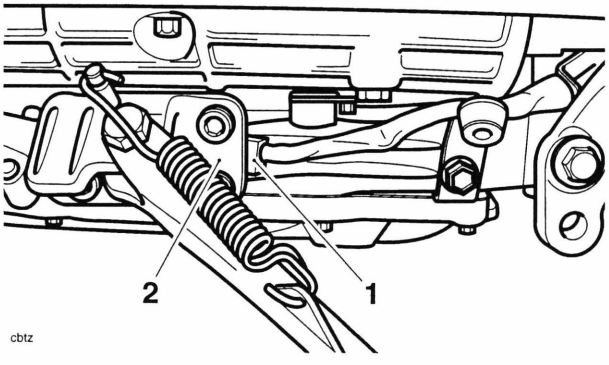

cbtz

1. Side stand switch connections
2. Side stand bracket

31. Release the clip securing the engine breather hose to the engine. Detach the hose.
32. Disconnect all electrical connections to the engine. These include:
    - Low oil pressure warning light switch;
    - Crankshaft position sensor;
    - Gear position sensor;
    - Road speed sensor;
    - Coolant temperature sensor;
    - Battery earth;
    - Starter motor connections.
33. Undo the bolts securing the airbox to the frame.
34. Detach the breather hose at the crankcase.

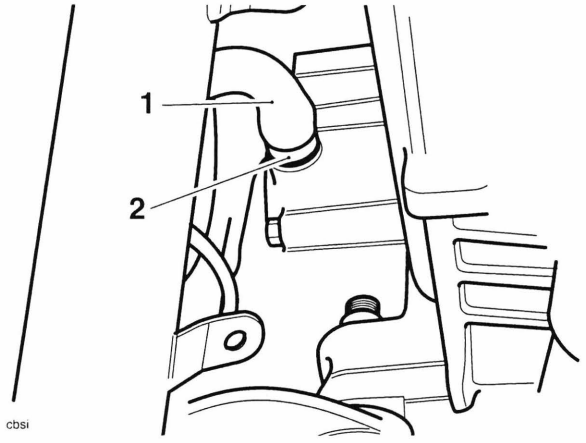

cbsi

1. Breather hose
2. Clip

Note:

- **It is not necessary to remove the airbox, but allowing it to float within the frame is helpful.**

35. Check that the engine is still securely supported.
36. Undo all engine mounting bolts and nuts, leaving the bolts in place until later.
37. Release the engine mounting adjuster locking collar and adjusters on the right side of the frame using service tool T3880063.

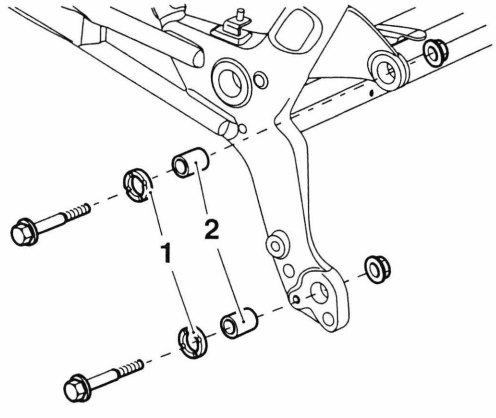

ccgb1

1. Locking collars
2. Engine mounting adjusters

38. Have several colleagues support the frame, then remove all engine mounting bolts from the engine mountings.
39. Leaving the engine on its support, lift the frame off the engine.

Installation

Note:

- **As the frame is being lowered onto the engine, reconnect the low oil pressure warning light switch and attach the breather hose.**

1. Locate the frame to the engine aligning the engine mounting points with the corresponding positions on the frame.
2. Fit the engine mounting bolts and nuts, but do not fully tighten at this stage.

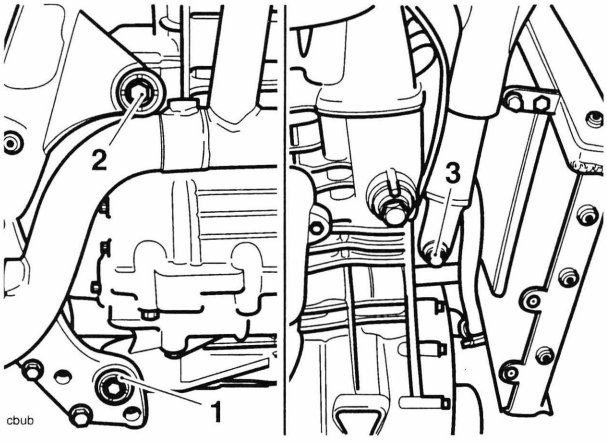

1. Lower rear mounting bolt (one per side)
2. Upper rear mounting bolt (one per side)
3. Front mounting bolt

3. Tighten the engine mounting bolts, nuts, adjusters and adjuster collars in the following sequence:
   - Tighten the left hand rear upper and lower mounting bolts and nuts to **80 Nm**.
   - Remove the right hand rear upper and lower mounting bolts.
   - Tighten the right hand engine mounting adjusters to **5 Nm**.
   - Using tool T3880063, tighten the locking collars on both right hand engine mounting adjusters to **55 Nm**.
   - Tighten the front engine mounting bolt and nut to **80 Nm**.
   - Refit the right hand upper and lower rear mounting bolts and nuts. Tighten to **80 Nm**.
4. Reconnect the remaining electrical connections to the engine. These include:
   - Low oil pressure warning light switch;
   - Crankshaft position sensor;
   - Gear position sensor;
   - Road speed sensor;
   - Coolant temperature sensor;
   - Battery earth;
   - Starter motor connections.
5. Attach and secure the engine breather hose with its clip.
6. Position the airbox to its mountings, fit and tighten its bolts to **9 Nm**.
7. Refit the side stand, tightening the fixings to **40 Nm**.
8. Reconnect the side stand switch.
9. Reconnect the spark plug leads.
10. Position the left hand footrest mounting bar to the frame and engine.

Note:

- **Rocket III shown, Rocket III Classic, Roadster and Touring are similar.**

11. Fit and tighten the bar's mounting fixings to **24 Nm**.

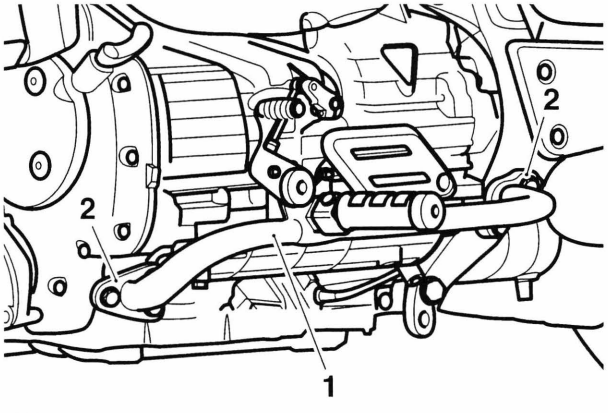

1. Left hand footrest mounting bar
2. Fixings

12. **Rocket III only:** Position the gear change crank to the selector shaft engaging the splines as noted during removal.

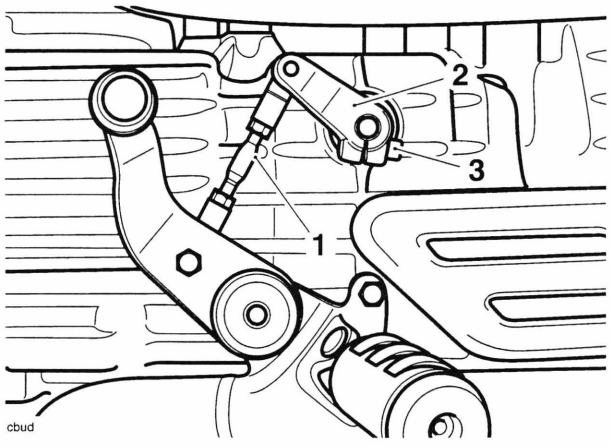

cbud

1. Selector rod
2. Gear change crank
3. Pinch bolt

13. **For Rocket III Classic and Touring only:** Select neutral and note the position of the gear change crank relative to the selector shaft.

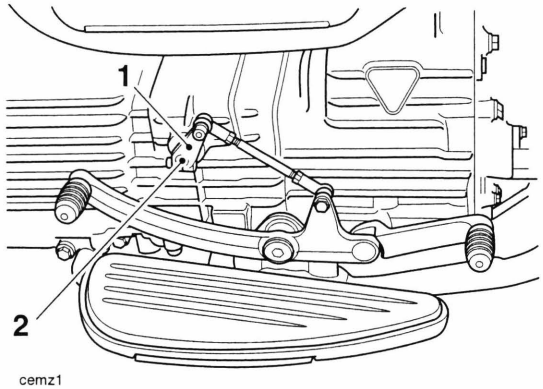

cemz1

1. Gear change crank
2. Selector shaft

14. Fit the pinch bolt to the crank and tighten it to **8 Nm**.

15. Support the rear brake master cylinder assembly while aligning the brake pipe joint to the frame outrigger. Tighten the bolt retaining the brake pipe joint to **20 Nm**.

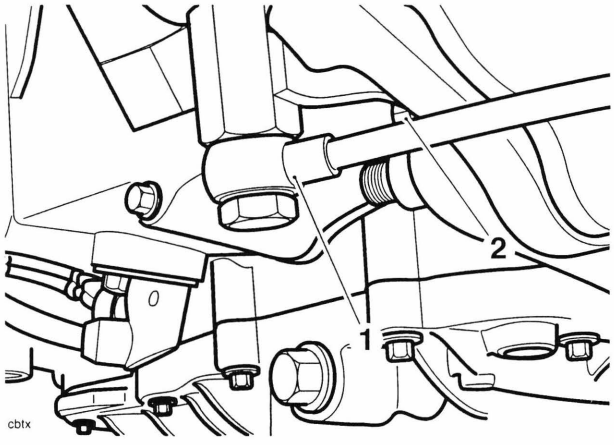

cbtx

1. Brake pipe joint
2. Fixing

16. Position the right hand footrest mounting bar to the frame and engine.
17. Fit and tighten the bar's mounting fixings to **24 Nm**.

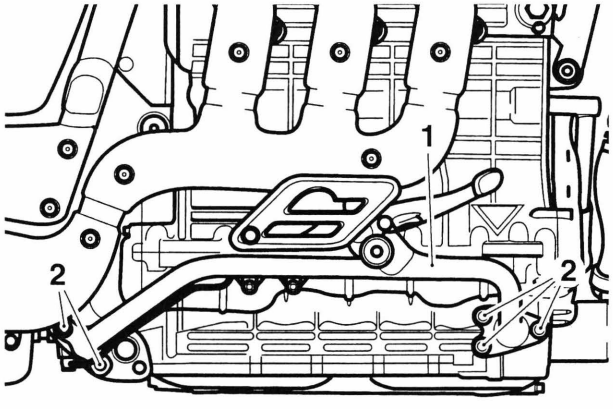

cbue

1. Right hand footrest mounting bar
2. Fixings

18. Position the master cylinder to the right hand footrest mounting bar. Fit and tighten the master cylinder bolts to **24 Nm**.

Note:

- **Rocket III shown, Rocket III Classic, Touring and Roadster are similar.**

19. Align the brake pedal with the pushrod, engage the clevis and retain it with the clip. Ensure the clip is fitted as shown below.

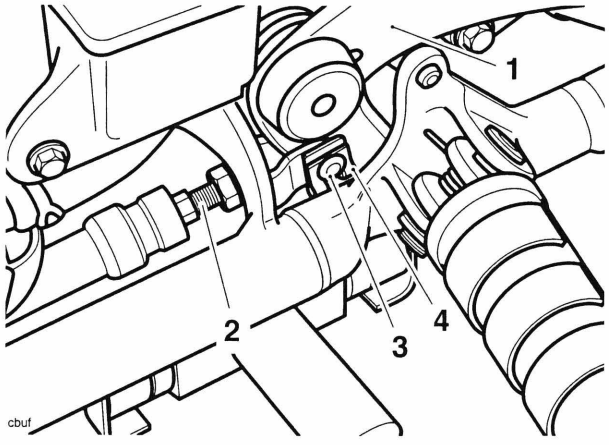

1. Pedal
2. Pushrod
3. Clevis
4. Clip

20. Refit the heel guard tightening the fixings to **7 Nm**.

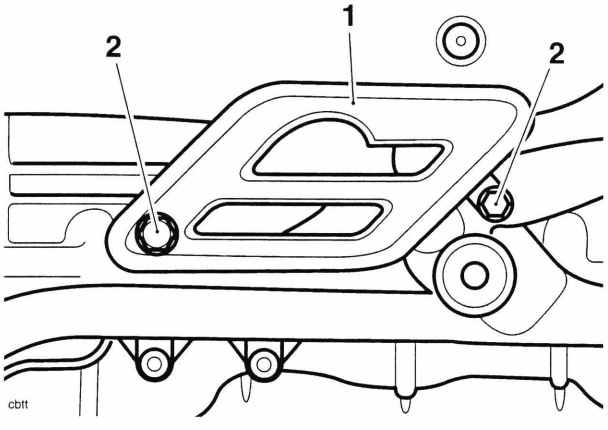

1. Heel guard
2. Heel guard fixings

21. Fit the brake pipe to its clip.

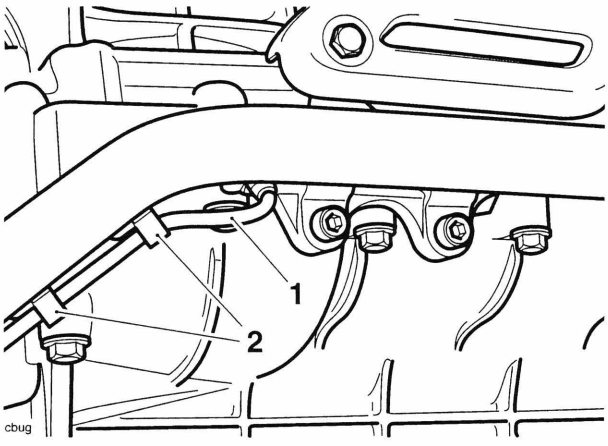

1. Brake pipe
2. Clip

22. Refit the front mudguard (see page *17-25* for Rocket III, Classic and Roadster, see page *17-26* for Rocket III Touring).
23. Refit the front wheel (see page *16-9* for Rocket III, Classic and Roadster, see page *16-11* for Rocket III Touring).
24. Refit the swinging arm, bevel box and rear suspension units (see section *6*).
25. Refit the rear wheel (see page *16-14* for Rocket III, Classic and Roadster, see page *16-17* for Rocket III Touring).
26. Refit the oil tank (see page *9-17*).
27. Refit the throttle bodies and intake hose (see page *11-167*).
28. Reconnect and adjust the throttle cables (see page *11-159* to reconnect the throttle cables, see page *11-160* to adjust the throttle cables.
29. Refit the radiator (see page *12-15*).
30. Refit the exhaust headers (see page *11-180* for Rocket III, Classic and Roadster, see page *11-185* for Rocket III Touring).
31. Refit the fuel tank (see page *11-124* for Rocket III, Classic and Roadster, see page *11-127* for Rocket III Touring).
32. Refill the engine with oil (see page *9-8*).
33. Refit the left and right side panels (see page *17-21*).
34. Reconnect the battery, positive (red) lead first.
35. Refit the seat (see page *17-18* for Rocket III, Classic and Roadster, see page *17-19* for Rocket III Touring).
36. Lower the motorcycle to the ground and place it on the side stand.
37. Start the engine and check for oil, coolant and any other leaks.
38. Check and adjust the engine oil level.

This page intentionally left blank

11 Fuel System/Engine Management

Table of Contents

Exploded View - Fuel Tank - Rocket III, Classic and Rocket III Roadster 11.6
Exploded View - Fuel Tank - Rocket III Touring 11.6
Exploded View - Fuel Pump - Rocket III and Classic 11.7
Exploded View - Fuel Pump - Rocket III Touring 11.8
Exploded View - Fuel Pump - Rocket III Roadster 11.9
Exploded View - Fuel Rail, Throttles and Injectors 11.10
Exploded View - Airbox - Rocket III, Classic and Rocket III Roadster 11.11
Exploded View - Airbox - Rocket III Touring 11.12
Exploded View - Exhaust System - Rocket III and Classic 11.13
Exploded View - Exhaust System - Rocket III Touring 11.14
Exploded View - Exhaust System - Rocket III Roadster 11.15
Exploded View - Evaporative System 11.16
Fuel Requirements 11.17
Glossary of Terms 11.18
Engine Management System 11.20
- System Description 11.20
- System Sensors 11.20
- Sensor Locations 11.21
- System Actuators 11.22
- Actuator Locations 11.23

Engine Management Circuit Diagram - Rocket III and Rocket III Classic 11.24
- Circuit Diagram - Engine Management System - Rocket III and Rocket III Classic 11.25

Engine Management Circuit Diagram - Rocket III Touring 11.26
- Circuit Diagram - Engine Management System - Rocket III Touring 11.27

Engine Management Circuit Diagram - Rocket III Roadster 11.28
- Key To Wiring Circuit Diagram 11.28
- Key To Wiring Colour Codes 11.28
- Circuit Diagram - Engine Management System - Rocket III Roadster 11.29

System Diagnostics 11.30
- On-board Fault Detection System 11.30
- Diagnostic Tool Connection 11.31
- Triumph Diagnostic Software 11.31

Build Data 11.31
Current Data 11.32
Sensor Data 11.32
Adaption Status 11.34
Function Tests 11.35
Adjust Tune 11.35
Freeze-frame Data 11.36
Diagnostic Trouble Codes 11.37
Electrical Connectors 11.40
Before Disconnection: 11.40
When Disconnecting a Connector: 11.40
When Inspecting a Connector: 11.40
When Connecting a Connector: 11.40
Disconnection of ECM connectors 11.40
Reconnection of ECM connectors 11.41
Further Diagnosis 11.41
Crankshaft Sensor - Rocket III and Classic 11.42
Crankshaft Sensor - Rocket III Touring and Roadster 11.43
Idle Speed Control - Rocket III and Classic 11.44
Idle Speed Control - Rocket III Touring and Roadster 11.46
Fuel Injectors - Rocket III and Classic 11.48
Fuel Injectors - Rocket III Touring and Roadster 11.50
Primary Throttle Position Sensor - Rocket III and Classic 11.52
Primary Throttle Position Sensor - Rocket III Touring and Roadster 11.53
Purge Valve - Rocket III and Classic 11.54
Purge Valve - Rocket III Touring and Roadster 11.55
Ignition Coils - Rocket III and Classic 11.56
Ignition Coils - Rocket III Touring and Roadster 11.58
Coolant Temperature Sensor - Rocket III and Classic 11.60
Coolant Temperature Sensor - Rocket III Touring and Roadster 11.62
Inlet Air Temperature Sensor - Rocket III and Classic 11.64
Inlet Air Temperature Sensor - Rocket III Touring and Roadster 11.66
Fuel Pump Relay - Rocket III and Classic 11.68
Fuel Pump Relay - Rocket III Touring and Roadster 11.69
System Voltage - Rocket III and Classic 11.70
System Voltage - Rocket III Touring and Roadster 11.71
Cooling Fan Relay - Rocket III and Classic 11.72
Cooling Fan Relay - Rocket III Touring and Roadster 11.73
Tachometer - Rocket III and Classic 11.74
Coolant Temperature Indication - Rocket III and Classic 11.76
Vehicle Speed Output - Rocket III and Classic 11.78
Lambda Sensor - Rocket III and Classic 11.80

Lambda Sensor Heater - Rocket III and Classic 11.81
Lambda Sensor - Rocket III Touring and Roadster 11.82
Lambda Sensor Heater - Rocket III Touring and Roadster 11.83
EEPROM Error 11.84
Fall Detection Switch - Rocket III and Classic 11.85
Fall Detection Switch - Rocket III Touring and Roadster 11.86
Instrument Communication (CAN) - Rocket III Touring 11.87
Instrument Communication (CAN) - Rocket III Roadster 11.88
2nd Throttle Position Sensor - Rocket III and Classic 11.89
2nd Throttle Position Sensor - Rocket III Touring and Roadster 11.90
2nd Throttle Actuator - Rocket III and Classic 11.91
2nd Throttle Actuator - Rocket III Touring 11.92
2nd Throttle Actuator - Rocket III Roadster 11.94
Vehicle Speed Sensor - Rocket III and Classic 11.96
Vehicle Speed Sensor - Rocket III Touring 11.97
Vehicle Speed Sensor - Rocket III Roadster 11.98
Ambient Pressure Sensor - Rocket III and Classic 11.99
Ambient Pressure Sensor - Rocket III Touring 11.100
Ambient Pressure Sensor Rocket III Roadster 11.101
Manifold Absolute Pressure (MAP) Sensor - Rocket III and Classic 11.102
Manifold Absolute Pressure (MAP) Sensor - Rocket III Touring 11.103
Manifold Absolute Pressure (Map) Sensor Rocket III Roadster 11.104
Gear Position Sensor - Rocket III and Classic 11.105
Gear Position Sensor - Rocket III Touring and Roadster 11.106
Fuel Level Sensor Circuit - Rocket III and Classic 11.107
Fuel Level Sensor Circuit - Rocket III Touring 11.108
Fuel Level Sensor Circuit - Rocket III Roadster 11.109
Fuel Level Warning Light Circuit - Rocket III and Classic 11.110
Fuel Level Gauge - Rocket III and Classic 11.111
EMS Main Relay Circuit - Rocket III Touring 11.112
EMS Ignition Voltage Input Circuit - Rocket III Touring 11.114
EMS Ignition Voltage Input Circuit - Rocket III Roadster 11.115
5 Volt Sensor Supply Circuit - Rocket III Touring 11.116
Tune Lock - Rocket III Touring 11.118
ECM or Tune ID Incorrect - Rocket III Touring 11.119
Fault Finding - Non Electrical 11.120
Fuel Tank - Rocket III, Classic and Roadster 11.121
Fuel tank - raising 11.121
Fuel tank - lowering and securing 11.123

Fuel tank - removal - Rocket III, Classic and Roadster 11.123
Fuel tank - installation - Rocket III, Classic and Roadster 11.124
Fuel Tank - Rocket III Touring 11.125
Fuel tank - raising 11.125
Fuel tank - lowering and securing 11.126
Fuel tank - removal - Rocket III Touring 11.126
Fuel tank - installation - Rocket III Touring 11.127
Fuel Pressure Checking 11.128
Fuel Pump, Filter and Pressure Regulator - Rocket III, Classic and Roadster 11.129
Removal 11.129
Inspection 11.131
Assembly 11.131
Installation 11.132
Fuel Level Sensor - Rocket III, Classic and Roadster 11.132
Removal 11.132
Installation 11.133
Fuel Pump, Filter and Pressure Regulator - Rocket III Touring 11.134
Removal 11.134
Inspection 11.136
Assembly 11.136
Installation 11.138
Fuel Level Sensor - Rocket III Touring 11.138
Removal 11.138
Installation 11.139
Airbox, Intake Duct and Hoses 11.139
Removal 11.139
Installation 11.146
Air Filter 11.151
Removal 11.151
Installation 11.151
Intake Air Temperature Sensor 11.152
Removal 11.152
Installation 11.152
Manifold Absolute Pressure (MAP) Sensor 11.152
Removal 11.152
Installation 11.152
Barometric Pressure Sensor 11.153
Removal 11.153
Installation 11.153
Gear Position Sensor 11.153
Removal 11.153
Installation 11.153
Road Speed Sensor 11.154
Removal 11.154
Installation 11.155

Crankshaft Position Sensor 11.155
Removal 11.155
Installation 11.156
Throttle Cables 11.156
Removal 11.156
Examination 11.159
Installation 11.159
Throttle cable adjustment 11.160
Throttle Body Balancing - Rocket III and Classic 11.161
Balance throttles screen 11.162
Throttle Body Balancing - Rocket III Roadster and Touring 11.162
Throttle Body 11.165
Removal 11.165
Installation 11.167
Injectors and Fuel Rail 11.170
Removal 11.170
Assembly/installation 11.170
Primary Throttle Potentiometer 11.171
Removal 11.171
Installation 11.171
Secondary Throttle Potentiometer 11.173
Removal 11.173
Installation 11.173
Idle Speed Control Stepper Motor 11.174
Removal 11.174
Installation 11.175
Engine Management Adaption 11.177
General Information 11.177
Adaption Status 11.177
Terminology 11.177
Typical Values 11.178
Forcing adaption to take place 11.178
Exhaust System - Rocket III and Classic 11.179
Removal 11.179
Installation 11.180
Exhaust System - Rocket III Roadster and Touring 11.182
Removal 11.182
Installation 11.185
Evaporative Loss Control System - US Models Only 11.187
US Models Only 11.187
Component Locations (all situated behind the left hand side cover) 11.187
Evaporative Control System - Engine Off 11.188
Evaporative Control System - Engine Running 11.189

Exploded View - Fuel Tank - Rocket III, Classic and Rocket III Roadster

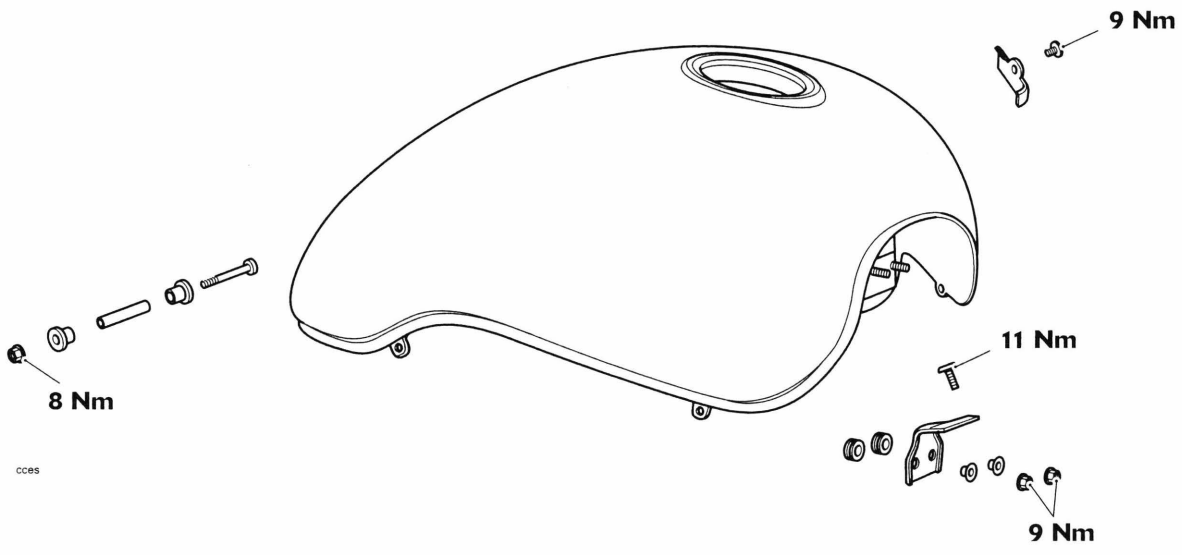

Exploded View - Fuel Tank - Rocket III Touring

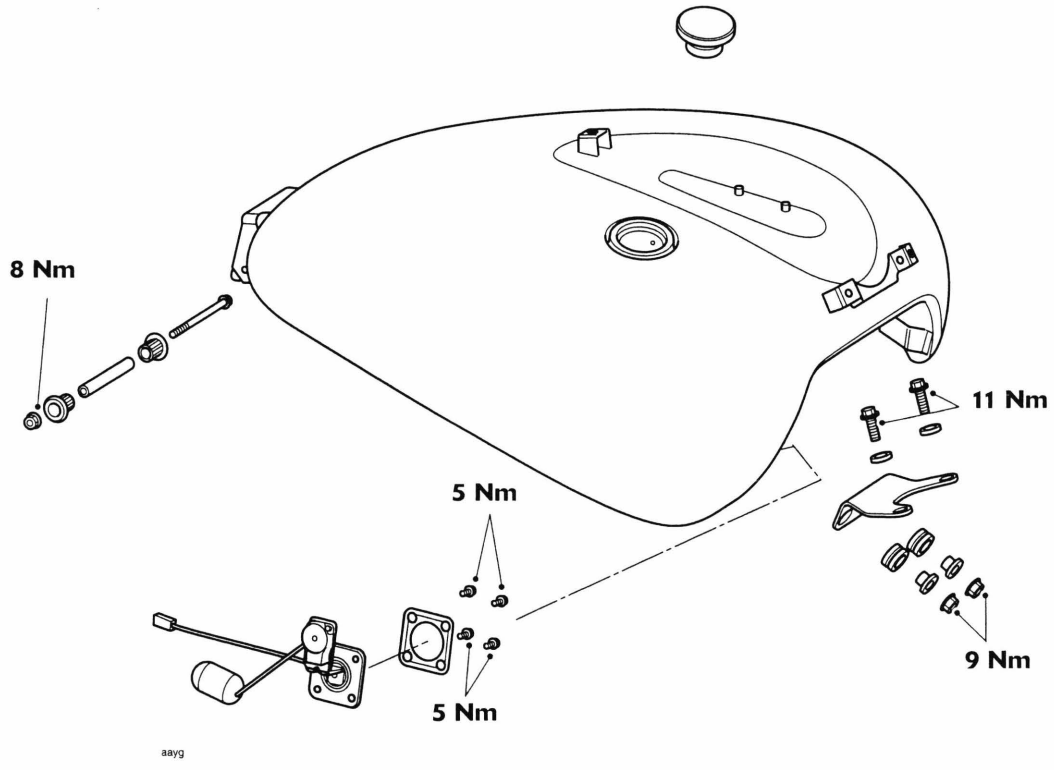

Exploded View - Fuel Pump - Rocket III and Classic

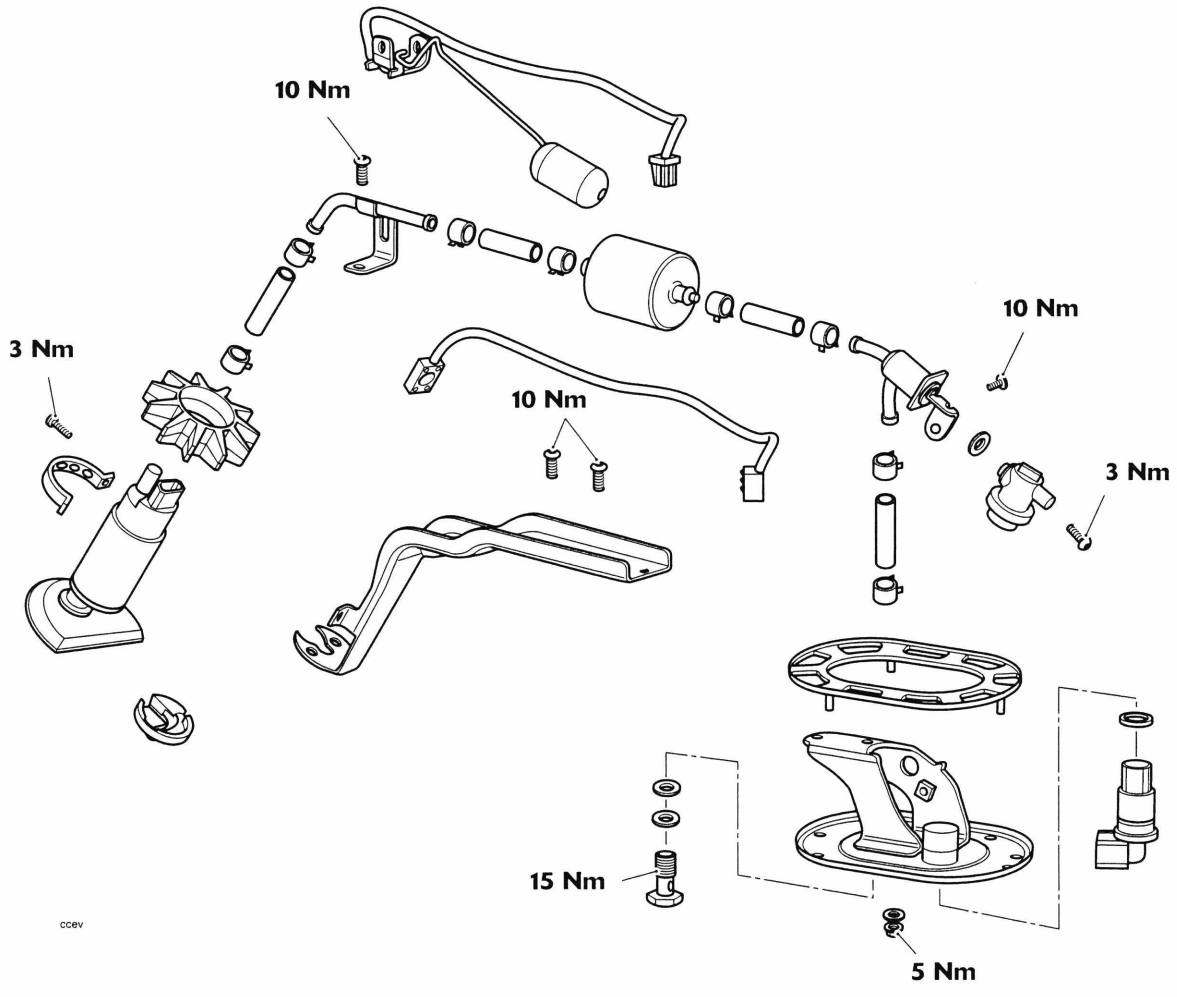

Exploded View - Fuel Pump - Rocket III Touring

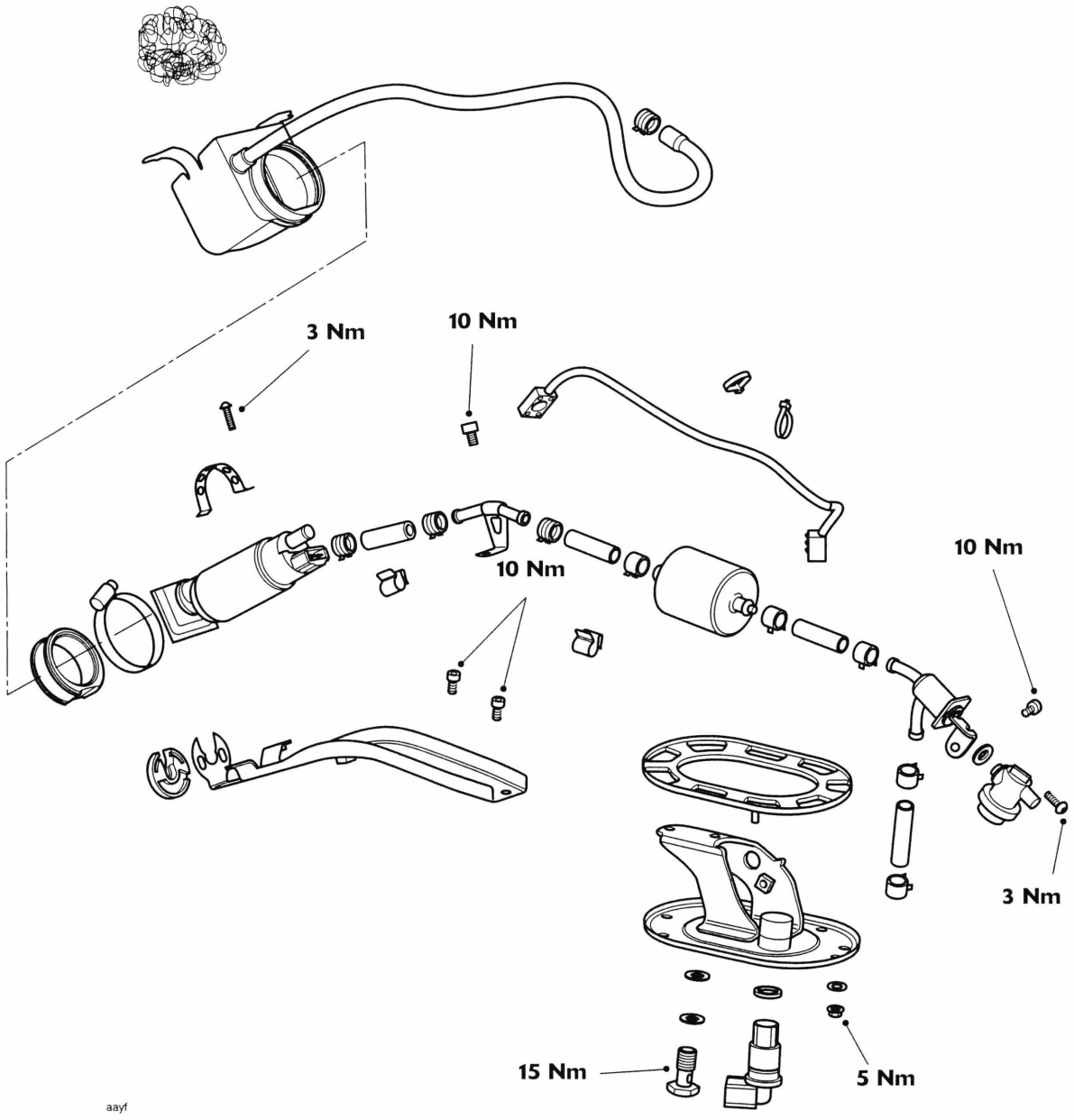

Exploded View - Fuel Pump - Rocket III Roadster

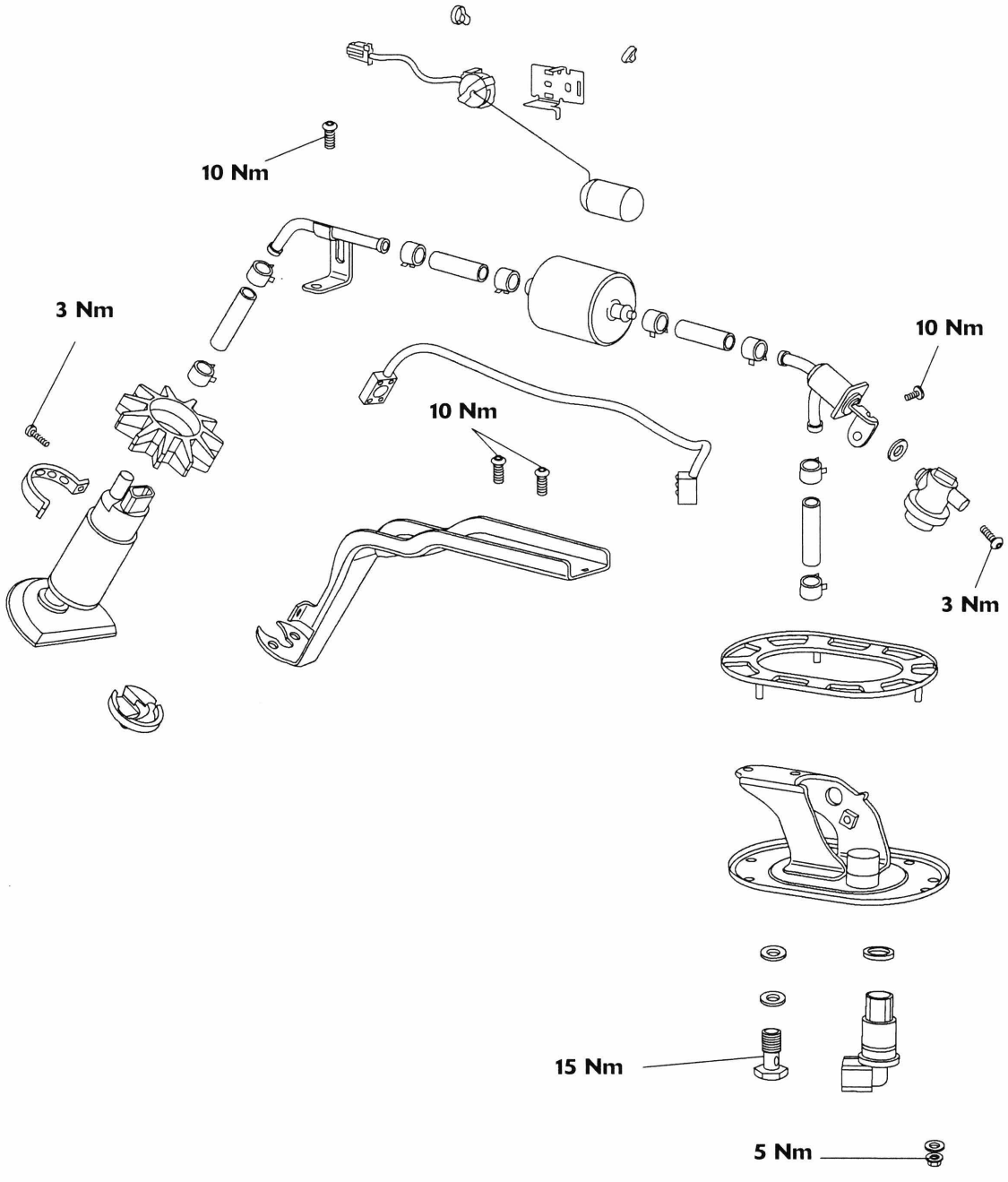

Exploded View - Fuel Rail, Throttles and Injectors

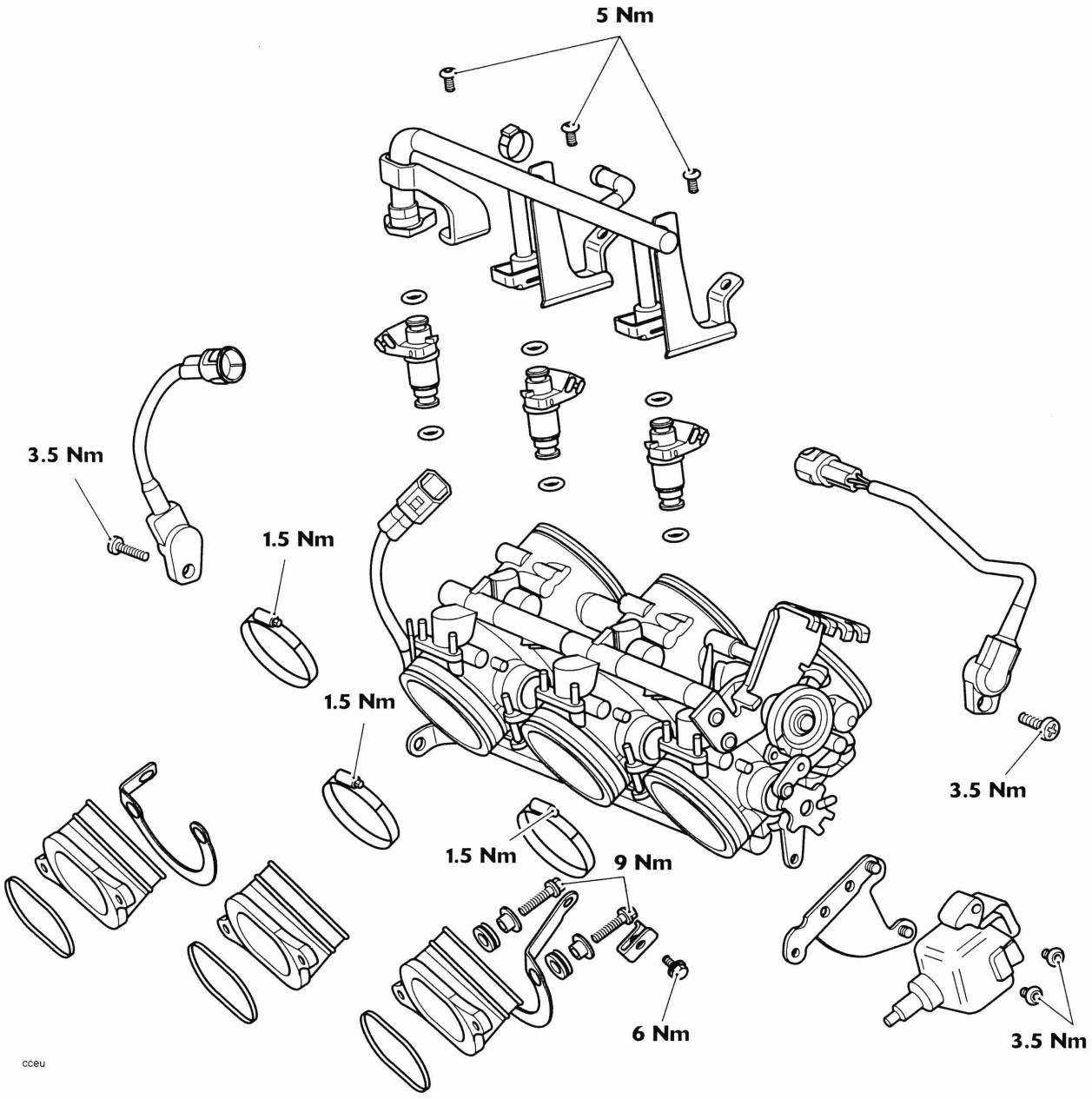

Exploded View - Airbox - Rocket III, Classic and Rocket III Roadster

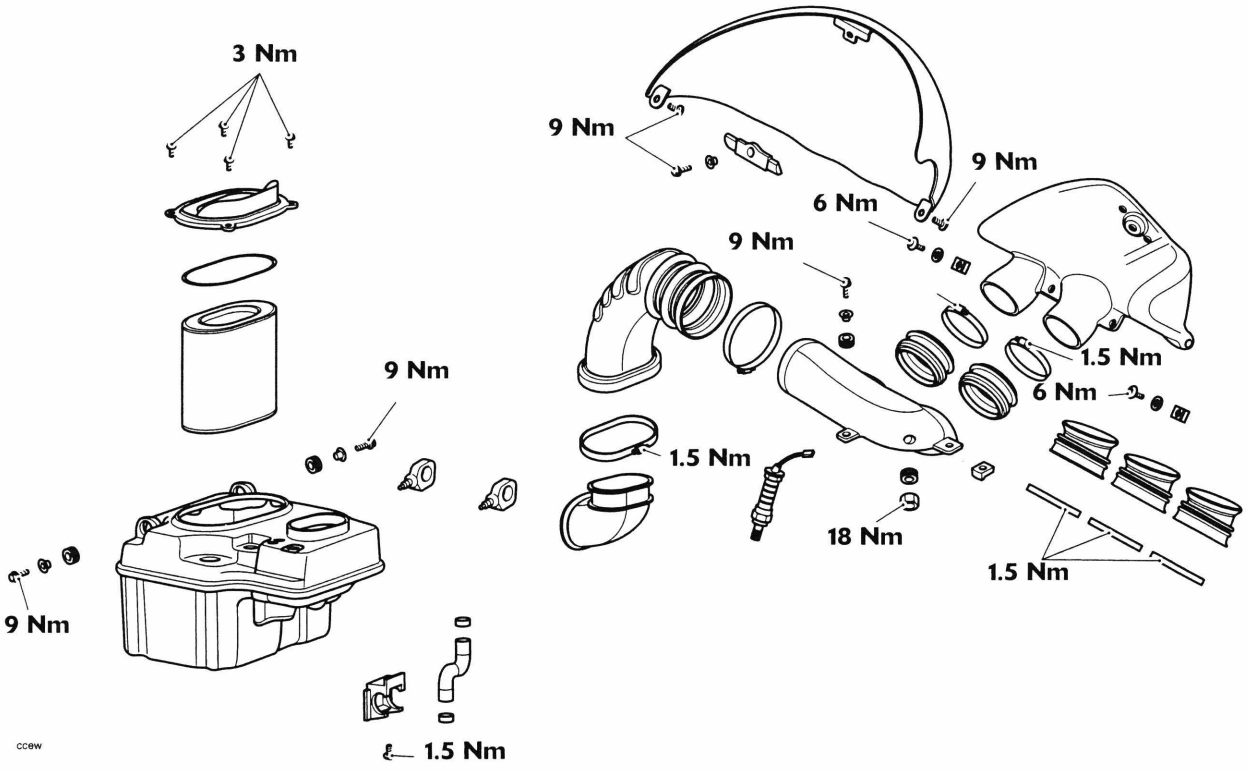

Exploded View - Airbox - Rocket III Touring

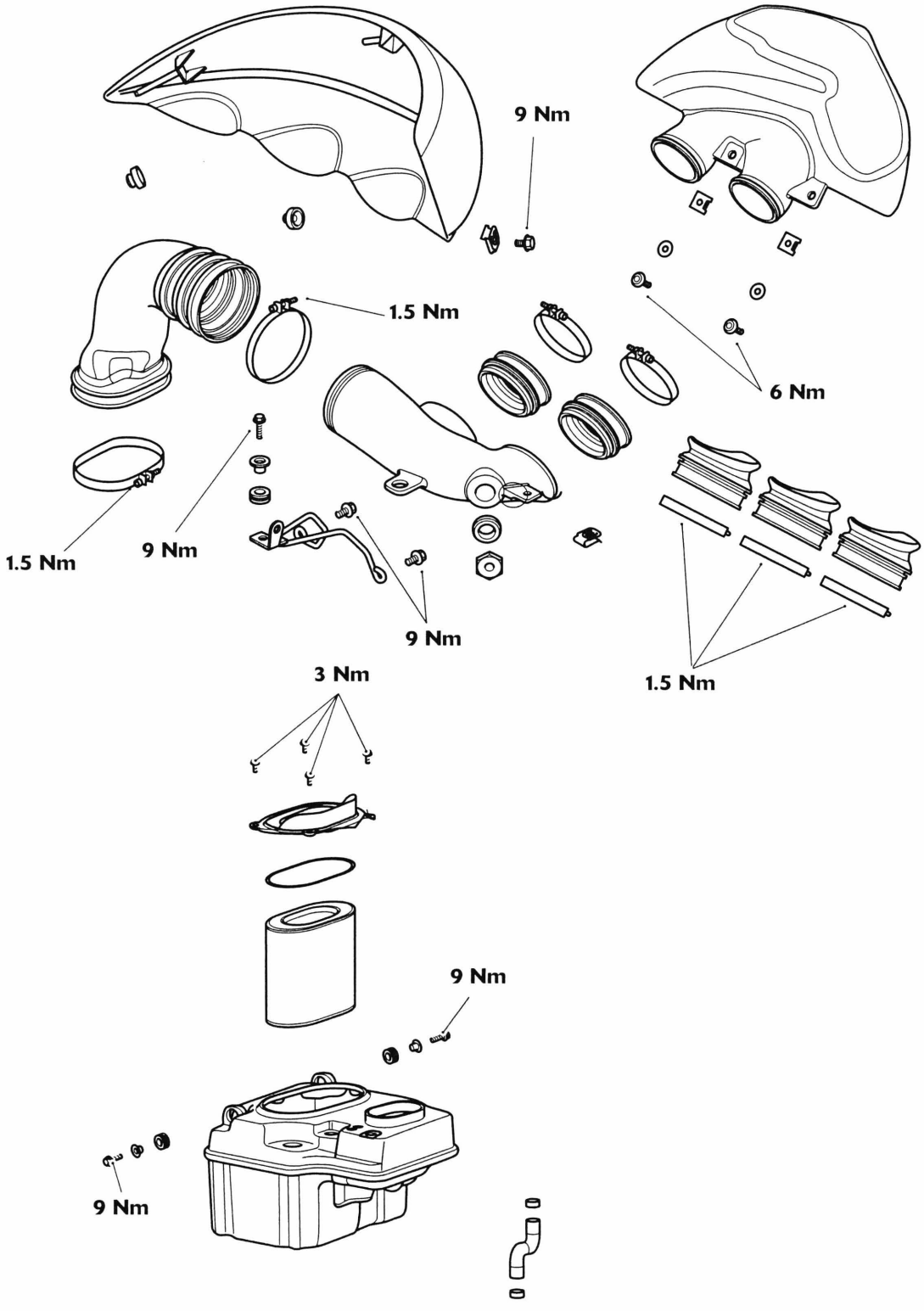

Exploded View - Exhaust System - Rocket III and Classic

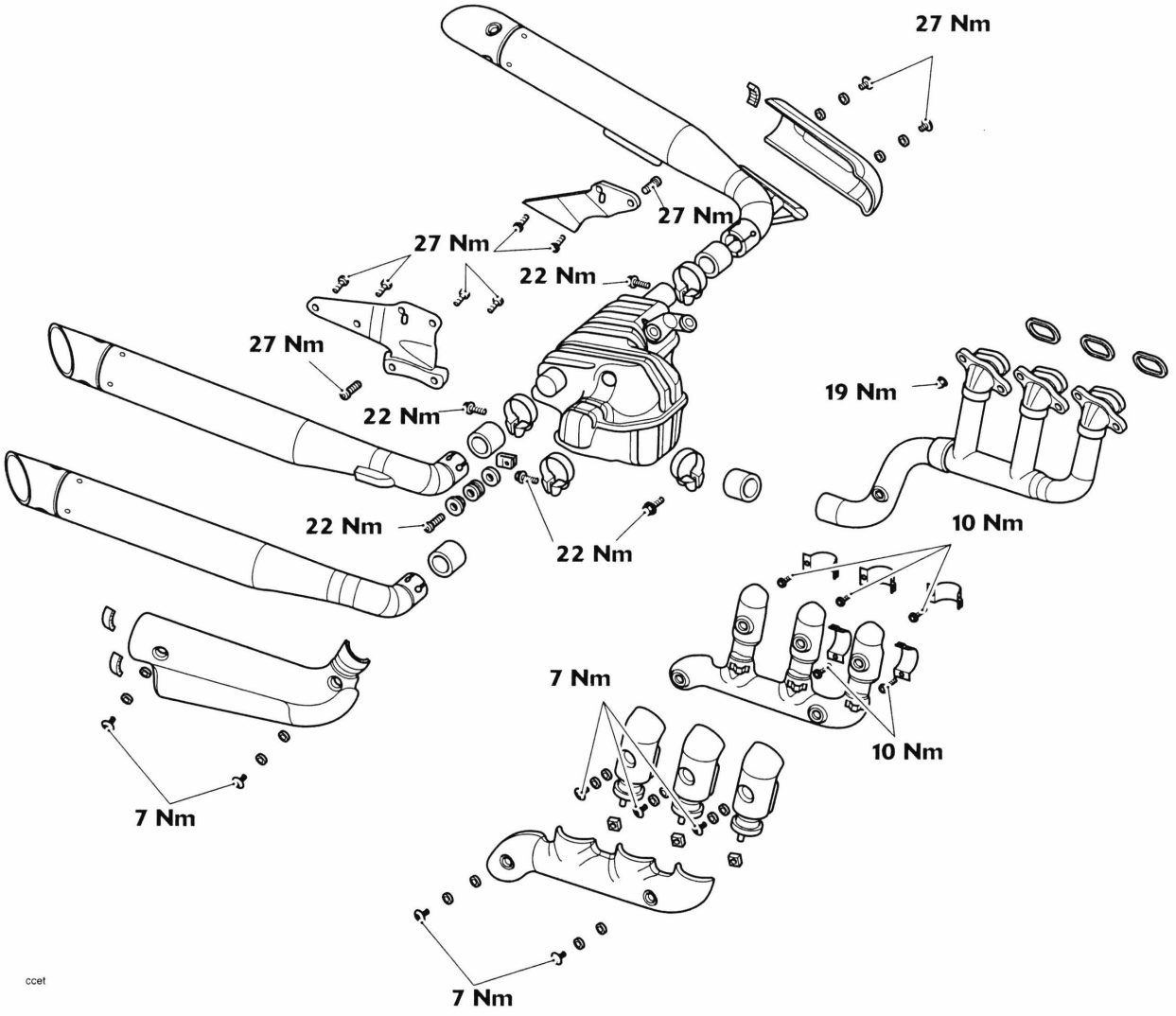

Exploded View - Exhaust System - Rocket III Touring

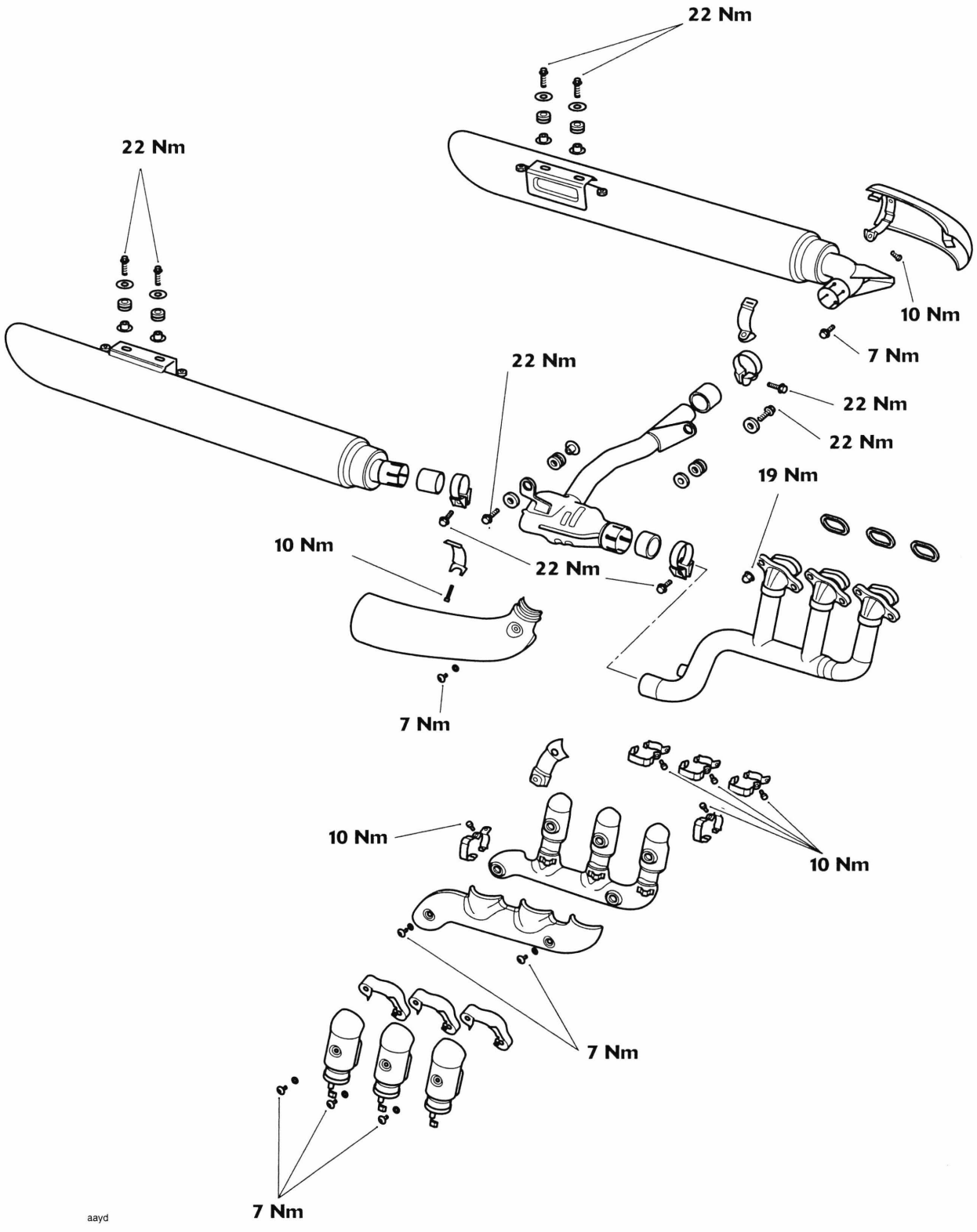

Exploded View - Exhaust System - Rocket III Roadster

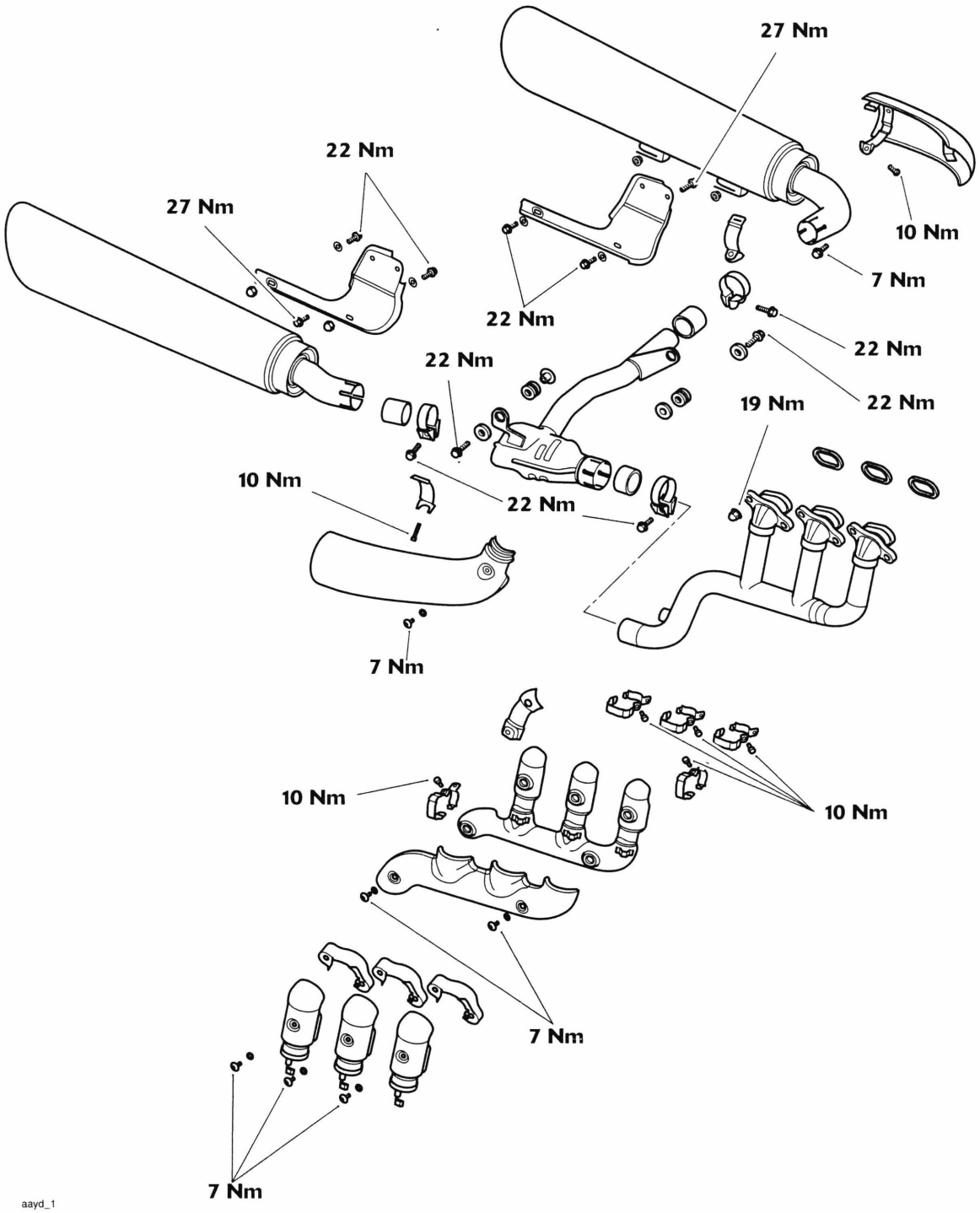

Exploded View - Evaporative System

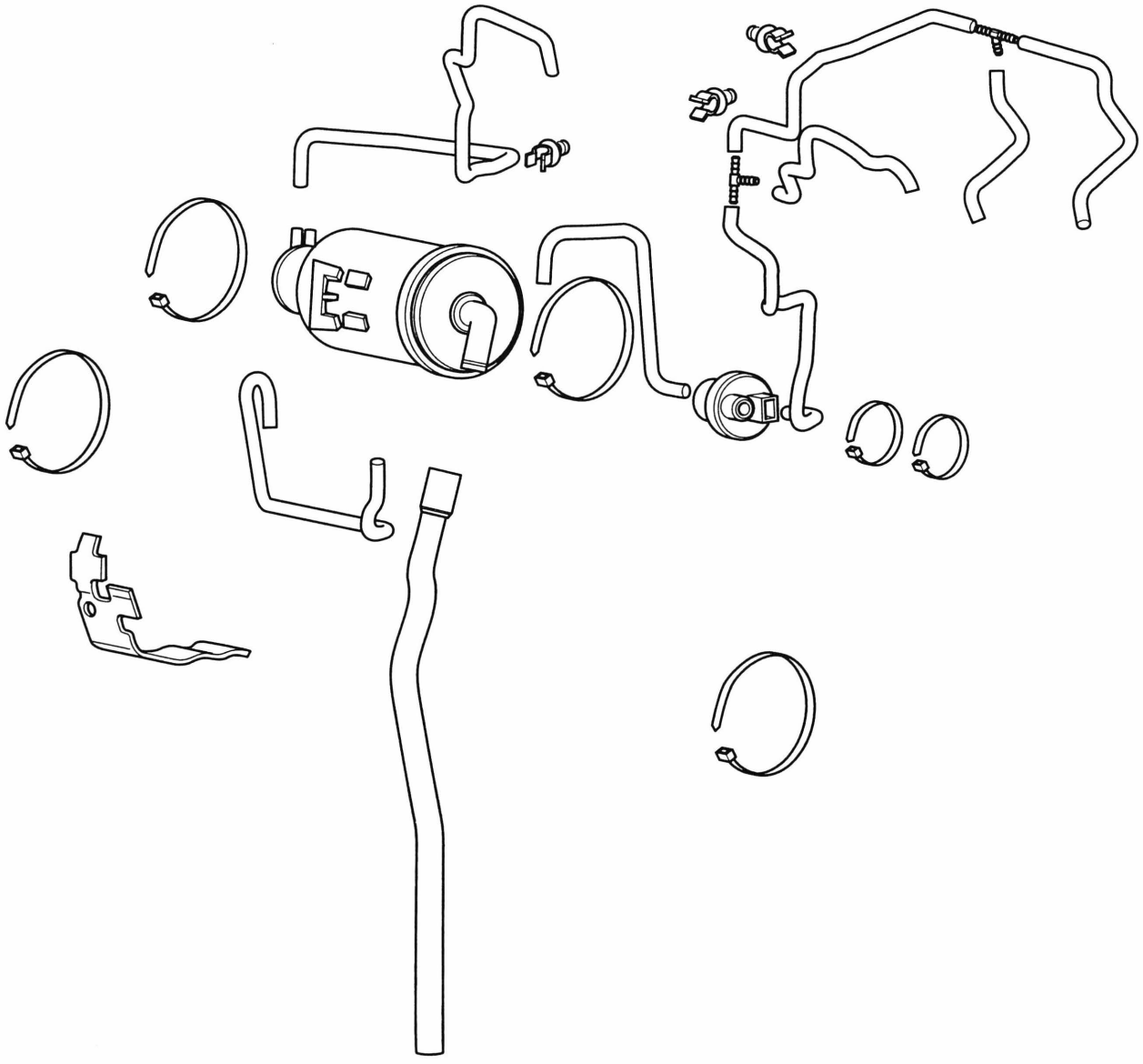

Fuel Requirements

Fuel Requirements - all countries except USA

Outside America, the Rocket III must be run on 91 RON or higher unleaded fuel.

Fuel Requirements - USA

In the United States of America where the octane rating of fuel is measured in a different way, the following information may be applied: the Rocket III is designed to run on unleaded gasoline with a CLC or AKI octane rating (R+M)/2 of 87 or higher.

Note:

- **If 'Knocking' or 'Pinking' occurs at a steady engine speed under normal load, use a different brand of gasoline or a higher octane rating.**

⚠ Caution

The use of leaded gasoline is illegal in some countries, states or territories and will invalidate the vehicle and emissions control warranties. Additionally, leaded gasoline will cause damage to emissions control components.

Oxygenated Gasoline

To help in meeting clean air standards, some areas of the U.S. use oxygenated gasoline to help reduce harmful emissions. The Rocket III will give best performance when using unleaded gasoline. However, the following should be used as a guide to the use of oxygenated fuels.

⚠ Caution

Because of the generally higher volatility of oxygenated fuels, starting, engine response and fuel consumption may be adversely affected by their use. Should any of these difficulties be experienced, run the motorcycle on normal unleaded gasoline.

Ethanol

Ethanol fuel is a mixture of 10% ethanol and 90% gasoline and is often described under the names 'gasohol', 'ethanol enhanced', or 'contains ethanol'. This fuel may be used in Triumph motorcycles.

Methanol

⚠ Caution

Fuels containing methanol should not be used in Triumph motorcycles as damage to components in the fuel system can be caused by contact with methanol.

MTBE (Methyl Tertiary Butyl Ether)

The use of gasolines containing up to 15% MTBE (Methyl Tertiary Butyl Ether) is permitted in Triumph motorcycles.

Glossary of Terms

The following terms and abbreviations will be found in this section. Below is given a brief explanation of what some of the more common terms and abbreviations mean.

Air temperature

The air temperature in the air box and intake hose.

Air temperature sensor

Sensor located in the airbox to detect the temperature of the incoming air.

ATDC

After Top Dead Centre (TDC).

Barometric pressure

Pressure of the air in the airbox.

Battery Voltage

The Voltage at the input to the Engine Control Module (ECM).

BTDC

Before Top Dead Centre (TDC).

Catalyst

Device placed in the exhaust system which reduces exhaust emissions by stimulating secondary combustion of the exhaust gases.

Closed throttle position

Throttle position at idle (i.e. against end stop), measured as a Voltage and expressed as percentage.

Coolant temperature

The coolant temperature in the cylinder head.

Coolant temperature sensor

Sensor which detects coolant temperature.

Cooling fan status

The 'on' or 'off' condition of the cooling fan.

DTC

Diagnostic Trouble Code.

ECM

Engine Control Module.

Engine speed

The crankshaft revolutions per minute.

Freeze frame

A data set captured at the time a Diagnostic Trouble Code (DTC) is set.

Idle fuel trim

The percentage above or below the nominal fuel requirement for the volume of air entering at idle.

Idle fueling

Adjustment of fueling at idle to suit the actual air inducted.

Idle reference speed

The target idle speed as determined by the Electronic Control Module (ECM). (It should be the same as the actual idle speed if the motorcycle is operating correctly.)

Ignition advance

The timing of ignition at the spark plug relative to Top Dead Centre.

Ignition switch position

The ON or OFF position of either or both the ignition switch and the engine stop switch.

Ignition timing

Same as 'ignition advance'.

Injector pulse time

The time during which an injector remains open (i.e. delivering fuel).

Long term fuel trim

Fueling after adapting to the engine's long term fueling requirements (closed loop only). See also short term fuel trim.

MAP sensor

Manifold Absolute Pressure (the air pressure in the intake system).

MIL

Malfunction Indicator Lamp.

Illuminates when most Diagnostic Trouble Codes (DTCs) are set.

Neutral switch status

The 'neutral' or 'in gear' status of the gear change.

Off idle fuel trim

The percentage above or below the nominal fuel requirement for the volume of air entering at engine speeds other than idle. This function is not currently used in the Triumph system.

Open circuit

A break in an electrical circuit - current cannot flow.

Over temp

High temperature within the Engine Control Module (ECM) caused by an internal or external failure.

Primary Throttle Position Sensor

Sensor for the primary (lower) throttle position.

Primary Throttle Stepper Motor

Stepper motor used to vary throttle opening at idle and when the engine is cold.

Purge valve duty cycle

The time the purge valve is open in an open / close cycle, expressed as a percentage of the cycle time.

Road Speed Sensor

Gearbox mounted sensor which delivers information to the ECM that is converted to the road speed value that is displayed on the speedometer.

Second Throttle Position Sensor

Sensor for the second (upper) throttle position.

Second Throttle Stepper Motor

Stepper motor used to vary all second throttle positions, on or off idle.

Sensor reference Voltage

Supply Voltage to the system sensors (nominally 5 Volts).

Short circuit

A 'short cut' in an electrical circuit - current by-passes the intended circuit (usually to earth).

Short term fuel trim

A correction applied to the fuel mixture during closed loop catalyst operation. This, in turn, has an effect on the long term fuel trim in that if an engine constantly requires mixture correction, the long term fuel trim will adapt to this requirement thus reducing the need for constant short term adjustment.

Sidestand status

The 'up' or 'down' position of the side stand.

Target dwell time

The actual time from coil 'on' to coil 'off'.

Throttle position

The position of the throttle butterfly given as a percentage of the movement range. When the data is displayed on the tool, fully open need not be 100% nor fully closed 0%.

Throttle Voltage

Voltage at the throttle potentiometer.

Vbatt

Battery Voltage.

Engine Management System

System Description

The Rocket III, Rocket III Classic and Rocket III Touring are fitted with an electronic engine management system which encompasses control of both ignition and fuel delivery. The electronic control module (ECM) draws information from sensors positioned around the engine, cooling and air intake systems and precisely calculates ignition advance and fueling requirements for all engine speeds and loads.

In addition, the system has an on-board diagnostic function. For additional information, see page *11-30*.

System Sensors

- **Clutch switch** - situated on the clutch lever. The clutch must be pulled in for the starter motor to operate.
- **Primary throttle position sensor** - situated at the rear of the lower throttle spindle. Used to relay throttle position information to the ECM. Throttle opening angle is used by the ECM to determine fueling and ignition requirements for all throttle positions.
- **Secondary throttle position sensor** - situated at the front of the upper throttle spindle. Used to relay secondary throttle position information to the ECM. Secondary throttle angle is used by the ECM to determine secondary throttle opening position under all engine running conditions.
- **Barometric pressure sensor** - situated beneath the motorcycle seat, in the top of the airbox. The barometric pressure sensor measures atmospheric air pressure. With this information, the amount of fuel per injection is adjusted to suit the prevailing conditions.
- **Fall detection switch** - situated behind the left hand side cover. The fall detection switch will detect if the motorcycle is on its side and will cut power to the ECM immediately. This prevents the engine from running and the fuel pump from delivering fuel. In the event of a fall, the switch is reset by returning the bike to an upright position and switching the ignition off then back on again.
- **Road speed sensor** - situated in the lower crankcase, on the left hand side. The road speed sensor provides the ECM with data from which road speed is calculated and displayed on the speedometer. A vehicle speed limitation device also receives information from the road speed sensor.
- **Side stand switch** - situated at the top of the sidestand leg. If the sidestand is in the down position, the engine will not run unless the transmission is in neutral.
- **Side stand switch** - situated at the top of the sidestand leg. If the sidestand is in the down position, the engine will not run unless the transmission is in neutral.
- **Engine coolant temperature sensor** - situated towards the front of the cylinder head, on the left hand side. Coolant temperature information, received by the ECM, is used to optimise fueling at all engine temperatures and to calculate hot and cold start fueling requirements.
- **Intake air temperature sensor** - situated at the front of the intake duct, above the camshaft cover. As the density of the air changes with temperature (therefore the amount of oxygen available to ignite the fuel), an intake air temperature sensor is fitted. Changes in air temperature are compensated for by adjusting the amount of fuel injected to a level consistent with clean combustion and low emissions.
- **Crankshaft position sensor** - situated in the alternator cover. The crankshaft position sensor detects movement of a toothed wheel attached to the alternator rotor.
  The toothed wheel gives a reference point from which the actual crankshaft position is calculated. The crankshaft position sensor information is used by the ECM to determine engine speed and crankshaft position in relation to the point where fuel is injected and ignition of the fuel occurs.
- **Lambda sensor** - situated in the exhaust header system upstream of the catalyst box. The lambda sensor constantly feeds information to the ECM on the content of the exhaust gases. Based on this information, adjustments to air/fuel ratio are made.
- **Manifold Absolute Pressure (MAP) sensor** - situated at the front of the intake duct, above the camshaft cover, connected to each of the three throttle bodies by equal length tubes. The MAP sensor provides information to the ECM which is used at shallow throttle angles (very small throttle openings) to provide accurate engine load indications to the ECM. This degree of engine load accuracy allows the ECM to make very small adjustments to fuel and ignition which would otherwise not be possible from throttle angle data alone.

Sensor Locations

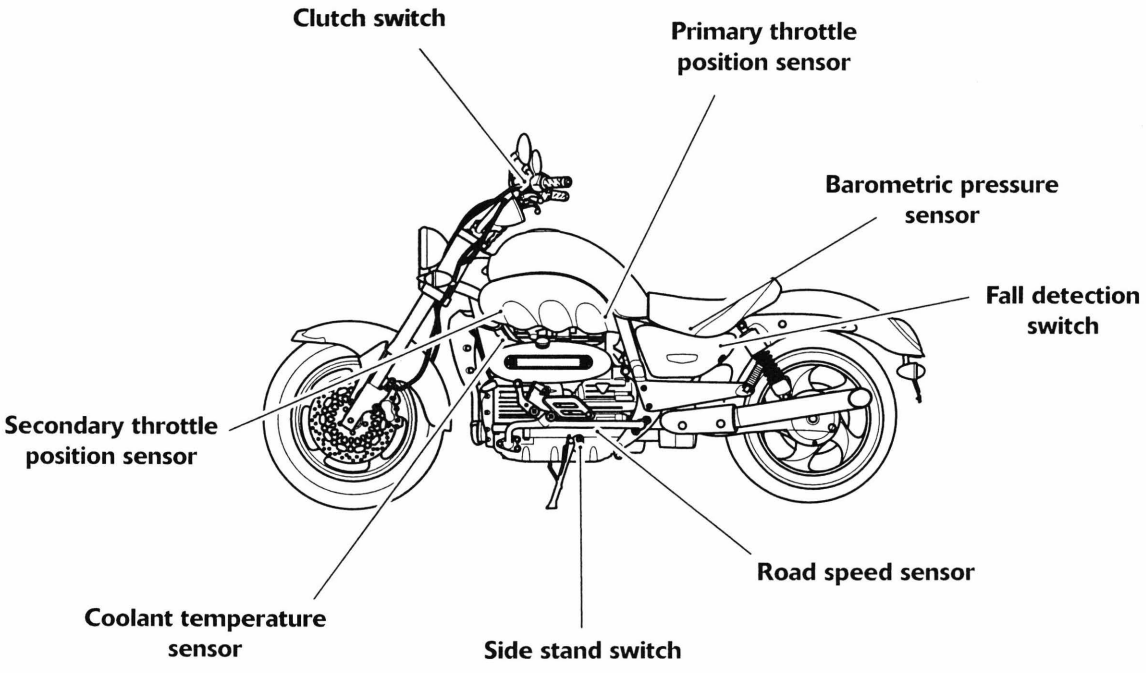

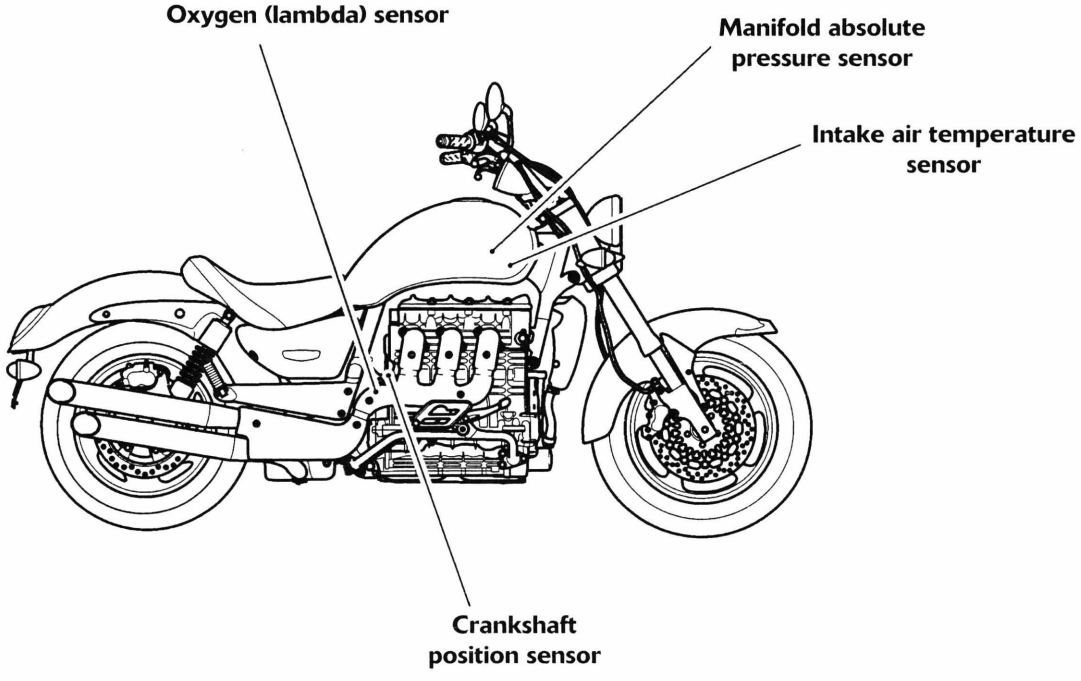

System Actuators

In response to signals received from the sensors, the ECM controls and directs messages to a series of electronic and electro-mechanical actuators. The function and location of the actuators is given below.

- **Primary throttle stepper motor** - situated at the front of the throttle bodies. The primary throttle stepper motor actuates a cam/lever which causes variations in the closed throttle position. Although used primarily to ensure target idle speed is maintained, it also increases throttle opening when the engine is cold.
- **Second throttle stepper motor** - situated between the throttle bodies for numbers one and two cylinders. In response to direction from the ECM, the second throttle stepper motor moves the second throttle spindle to the position directed by the ECM. The second butterfly optimise engine torque by maintaining intake air flow speed. It does not act as a choke for cold start purposes.
- **Injectors** - located in the throttle bodies. The engine is fitted with three injectors. The spray pattern of the injectors is fixed but the length of time each injector can remain open is variable according to operating conditions. The duration of each injection is calculated by the ECM using data received from the various sensors in the system.
- **Main power relay** - situated behind the left hand side cover. When the ignition is switched on, the main power relay is powered up to provide a stable Voltage supply for the ECM.
- **Canister purge valve (California models only)** - situated in the vapour return line between the carbon canister and the throttle bodies. The purge valve controls the return of vapour which has been stored in the carbon canister during the period when the engine is switched off. The valve is 'pulsed' by the ECM to give control over the rate at which the canister is purged.
- **Fuel pump** - located inside the fuel tank. The electric fuel pump delivers fuel into the fuel system, via a pressure regulator, at a constant 3 bar pressure. The fuel pump is run continuously when the engine is operating and is also run briefly when the ignition is first switched on to ensure that 3 bar is available to the system as soon as the engine is cranked. Fuel pressure is controlled by a pressure regulator also situated inside the fuel tank.
- **Cooling fan** - located behind the radiator. The ECM controls switching on and off of the cooling fan in response to a signal received from the coolant temperature sensor. When the coolant temperature rises to a level where the cooling effect of natural airflow is insufficient, the cooling fan is turned on by the ECM. When the coolant temperature falls sufficiently, the ECM turns the cooling fan off. The fan only becomes operational when the engine is running. It will not operate at any other time.
- **Ignition coils** - mounted on a bracket, above the camshaft cover. There are three coils fitted, one for each pair of spark plugs. The ECM controls the point at which the coils are switched on and off. In calculating the switch-on time, the ECM allows sufficient time for the coils to charge to a level where a spark can be produced. The coils are switched off at the point of ignition, the timing of which is optimised for good engine performance.

Note:

- **In this system, the starter lockout system (clutch switch, neutral switch, sidestand switch) all operate through the engine management ECM.**

Actuator Locations

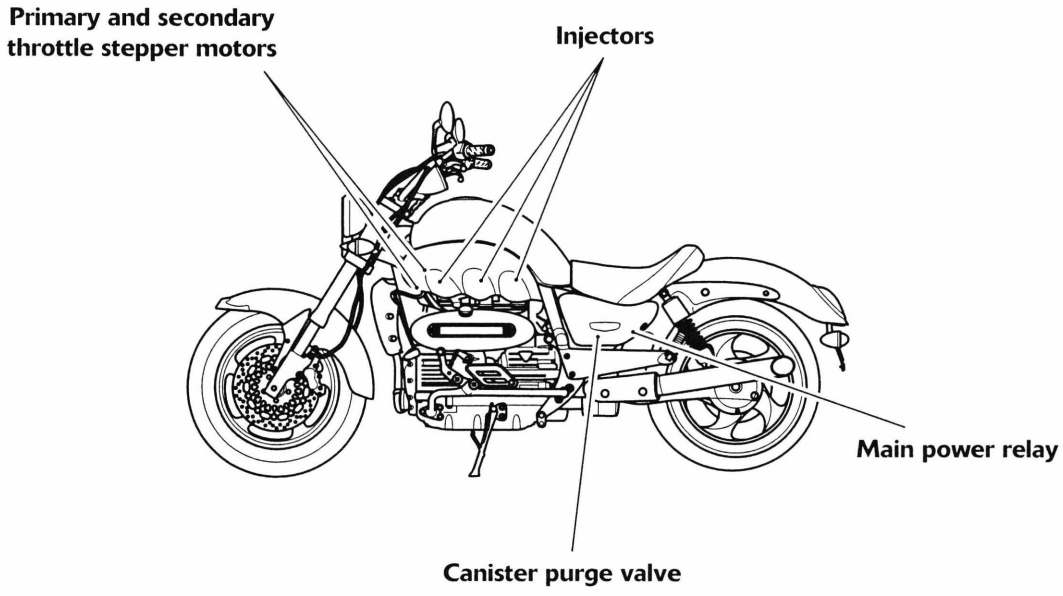

ccdi

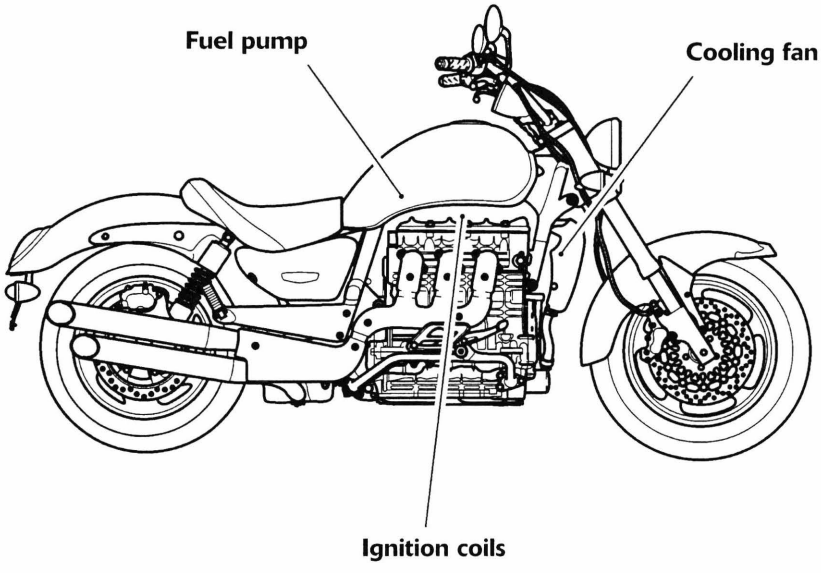

ccdg

Engine Management Circuit Diagram - Rocket III and Rocket III Classic

Key To Wiring Circuit Diagram

Key	Item Description
1	Engine Control Module
2	Diagnostic Connector
3	Vehicle Speed Sensor
4	Sidestand Switch
5	Instrument Assembly
6	Accessory Fuel Gauge
7	Gear Position Sensor
8	Clutch Switch
9	Starter Relay
10	Fall Detection Sensor
11	Air Pressure Sensor
12	MAP Sensor
13	Inlet Air Temperature Sensor
14	Lambda Sensor
15	Cooling Fan
16	Fuel Pump and Level Sender Assembly
17	Fuel Pump Relay
18	Cooling Fan Relay
19	Fuse Box (Fuse 7)
20	Ignition Coils
21	Evaporative Purge Valve
22	Throttle Position Sensor
23	Second Throttle Position Sensor
24	Inlet Air Temperature Sensor
25	Idle Speed Control Stepper Motor
26	Second Throttle Actuator
27	Fuel Injectors
28	Engine Harness Connector
29	Engine Management System Relay
30	Crankshaft Sensor

Key To Wiring Colour Codes

Code	Wiring Colour
B	Black
U	Blue
N	Brown
G	Green
S	Slate/Grey
O	Orange
K	Pink
R	Red
P	Purple
W	White
Y	Yellow
LG	Light Green
LU	Light Blue

ECM Connector Pin Numbering

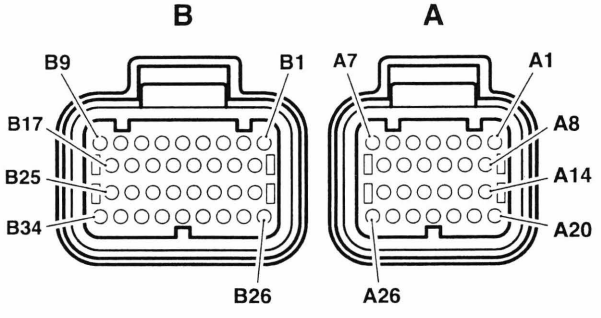

cbhs

The above illustration shows the pin numbering system used in the engine management circuit diagram.

The small connector's pins are prefixed A and the large connector's pins B. As viewed on the mating face with the ECM (as per the illustration), pins are numbered from right to left with number one in the top right corner.

Circuit Diagram - Engine Management System - Rocket III and Rocket III Classic

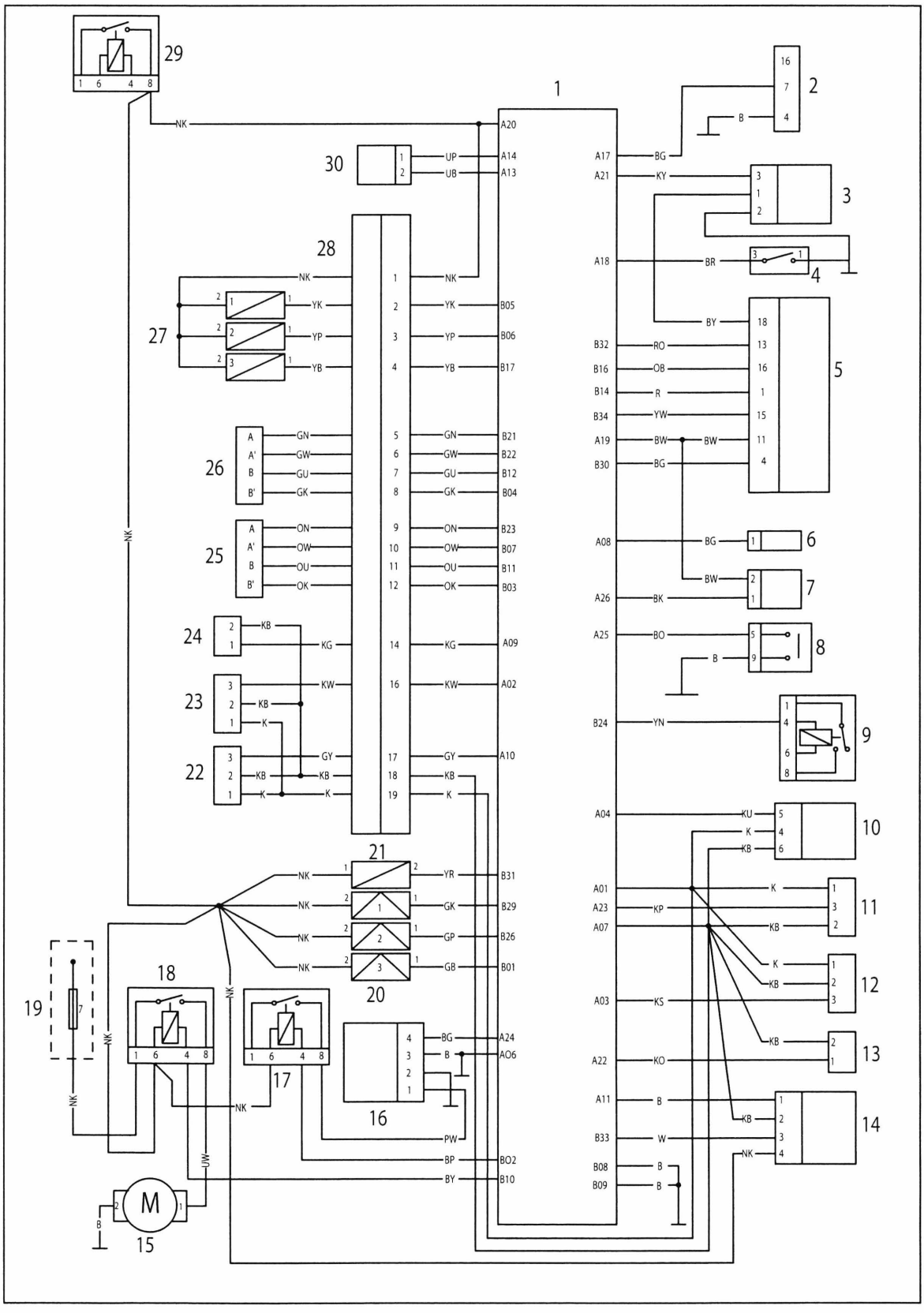

Engine Management Circuit Diagram - Rocket III Touring

Key To Wiring Circuit Diagram

Key	Item Description
1	Engine Management System Relay
2	Fuse Box (Fuse 7)
3	Fuel Injector 1
4	Fuel Injector 2
5	Fuel Injector 3
6	Second Throttle Actuator
7	Idle Speed Control Stepper Motor
8	Coolant Temperature Sensor
9	Engine Harness Connector
10	Second Throttle Position Sensor
11	Throttle Position Sensor
12	Fall Detection Sensor
13	Air Pressure Sensor
14	Gear Position Sensor
15	Fuel Level Sensor
16	Inlet Air Temperature Sensor
17	MAP Sensor
18	Lambda Sensor
19	Evaporative Purge Valve
20	Ignition Coil 1
21	Ignition Coil 2
22	Ignition Coil 3
23	Cooling Fan Relay
24	Fuel Pump Relay
25	Cooling Fan
26	Fuel Pump
27	Lambda Sensor
28	Crankshaft Sensor
29	Vehicle Speed Sensor
30	Sidestand Switch
31	Starter Relay
32	Clutch Switch
33	Instrument Assembly
34	Diagnostic Connector
35	Engine Control Module

Key To Wiring Colour Codes

Code	Wiring Colour
B	Black
U	Blue
N	Brown
G	Green
S	Slate/Grey
O	Orange
K	Pink
R	Red
P	Purple
W	White
Y	Yellow
LG	Light Green
LU	Light Blue

ECM Connector Pin Numbering

Connector B (Grey) Connector A (Black)

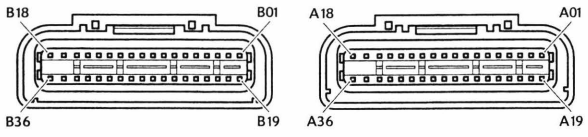

The above illustration shows the pin numbering system used in the engine management circuit diagram.

The black connector pins are prefixed A and the grey connector pins B. As viewed on the mating face with the ECM (as per the illustration), pins are numbered from right to left with number one in the top right corner.

Circuit Diagram - Engine Management System - Rocket III Touring

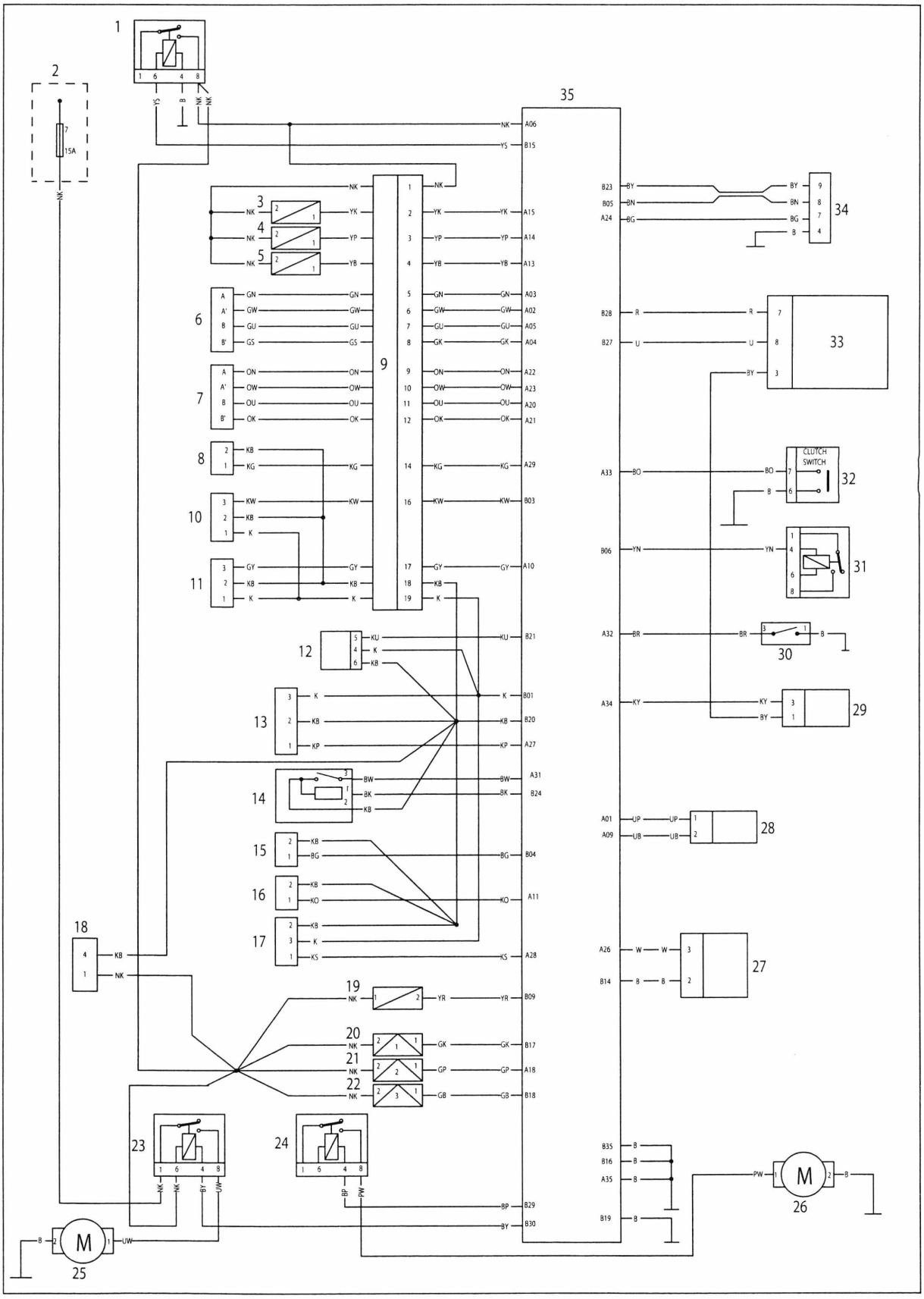

Engine Management Circuit Diagram - Rocket III Roadster

Key To Wiring Circuit Diagram

Key	Item Description
1	Engine Control Module
2	Diagnostic Connector
3	Speedometer
4	Tachometer
5	Clutch Switch
6	Starter Relay
7	Sidestand Switch
8	Vehicle Speed Sensor
9	Gear Position Sensor
10	Crankshaft Sensor
11	Lambda Sensor
12	Fuel Pump and Level Sender
13	Cooling Fan
14	Fuel Pump Relay
15	Cooling Fan Relay
16	Ignition Coils 1, 2 and 3
17	Purge Valve
18	Lambda Sensor
19	MAP Sensor
20	Inlet Air Temperature Sensor
21	Air Pressure Sensor
22	Fall Detection Switch
23	Throttle Position Sensor
24	Second Throttle Position Sensor
25	Coolant Temperature Sensor
26	Idle Speed Control Stepper Motor
27	Second Throttle Actuator
28	Fuel Injector 1
29	Fuel Injector 2
30	Fuel Injector 3
31	Main Fuse Box (Fuse 7)
32	Engine Management System Relay

Key To Wiring Colour Codes

Code	Wiring Colour
B	Black
U	Blue
N	Brown
G	Green
S	Slate/Grey
O	Orange
K	Pink
R	Red
P	Purple
W	White
Y	Yellow
LG	Light Green
LU	Light Blue

ECM Connector Pin Numbering

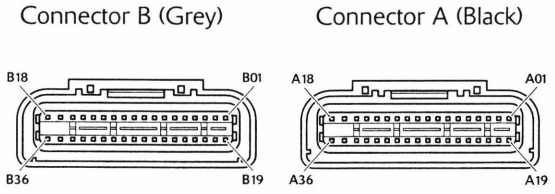

The above illustration shows the pin numbering system used in the engine management circuit diagram.

The black connector pins are prefixed A and the grey connector pins are prefixed B. As viewed on the mating face with the ECM (as per the illustration), pins are numbered from right to left with number one in the top right corner.

Circuit Diagram - Engine Management System - Rocket III Roadster

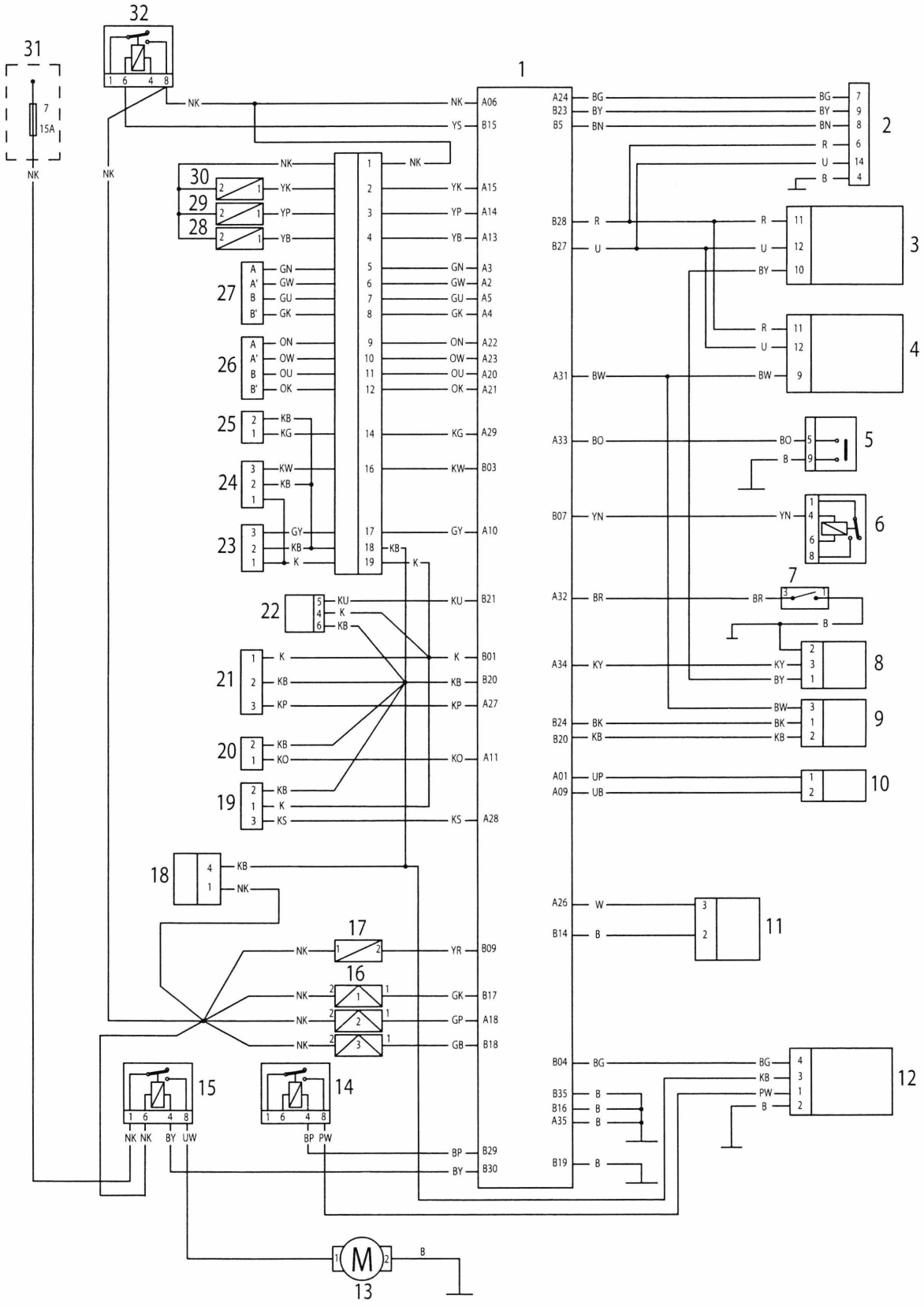

System Diagnostics

The engine management system has an on-board diagnostics feature which allows service technicians to retrieve stored data from the ECM using the Triumph diagnostic software. **Full details of the Triumph diagnostic software operation are given in the Triumph Diagnostic Tool User Guide.**

The tool is connected to the motorcycle using a dedicated diagnostic plug situated beneath the seats. By using a dedicated plug, no electrical connectors associated with the system are disturbed, reducing potential connector damage.

The tool allows the user to retrieve data associated with the system sensors and actuators, test various component functions, read build data and make minor adjustments to the set-up of the system. The data and tests available are described on the following pages.

On-board Fault Detection System

The on-board diagnostic system has two stages to fault detection. When a fault is detected, the DSM (Diagnostic Status Manager) raises a flag to indicate that a fault is present and increments a counter. The counter checks the number of instances that the fault is noted. For example, if there is a fault in the crankshaft position sensor, the counter will increment its count each time the crankshaft turns through 360°, provided the fault is still present.

When the count begins, the fault is detected but not confirmed. If the fault continues to be detected and the count reaches a pre-determined threshold, the fault becomes confirmed. If the fault is an emissions related fault or a serious malfunction affecting engine performance, a DTC (Diagnostic Trouble Code) and freeze frame data will be logged in the ECM's memory and the MIL (Malfunction Indicator Lamp) on the motorcycle instrument panel is illuminated. Once a fault is confirmed, the number of warm-up cycles made by the engine is counted. If the fault clears, the warm-up cycle counter will extinguish the MIL (Malfunction Indicator Lamp) at a pre determined count, and erase the DTC and freeze frame data from the ECM memory at another (higher) count.

A single warm-up cycle is deemed to have taken place when the following criteria have been met:

- The coolant temperature must be raised to 72°C or more.
- The coolant temperature must have risen by 23°C or more from its start temperature, when 72°C is reached.
- A controlled power-down sequence must take place.

Note:

- **When a fault has been rectified, the MIL will remain illuminated until sufficient non-fault warm-up cycles have taken place to turn it off. The MIL will be immediately extinguished if, after first rectifying the fault, the DTC (diagnostic trouble code) that caused the MIL illumination is erased from the ECM memory using the Triumph diagnostic tool.**

Note:

- **In most cases, when a fault is detected, the engine management system will revert to a 'limp-home' mode. In this mode, the engine will still function though the performance and fuel economy may be marginally affected. In some cases, the rider may not notice any appreciable difference from normal operation.**

Diagnostic Tool Connection

1. To connect the Triumph diagnostic interface to the motorcycle, remove the rider's seat (see page *17-18*) and release the diagnostic connector from its locating tang.
2. Plug the diagnostic interface directly in to the diagnostic connector.

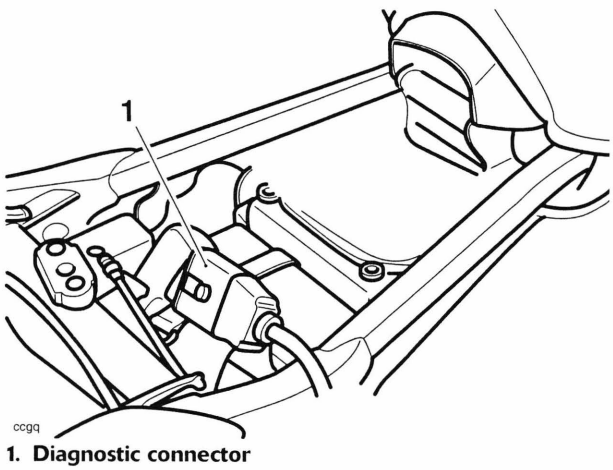

1. Diagnostic connector

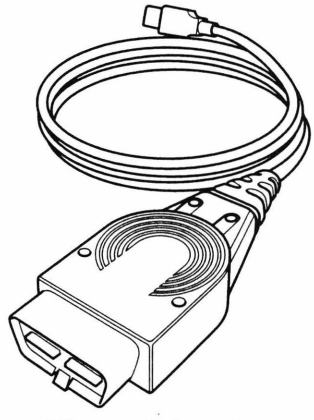

Diagnostic Interface

3. When the diagnostic session is completed, disconnect the Triumph diagnostic interface.
4. Refit the diagnostic connector to its locating tang and refit the rider's seat (see page *17-18*).

Triumph Diagnostic Software

Described on the following pages is the range of information which can be retrieved from the ECM's memory and the adjustments which can be performed using the Triumph diagnostic software.

The tables indicate which tests are performed by the on-board system and what information can be retrieved by the Triumph diagnostic tool.

Note:

- **Full details of how to operate the software can be found in the Triumph Diagnostic Tool User Guide, which can be downloaded by authorised Triumph dealers from www.triumphonline.net.**

Build Data

The **Build Data** screen will display the following information:

- Motorcycle model;
- Vehicle Identification Number (VIN);
- ECM type;
- ECM ID;
- ECM serial number;
- Tune number;
- Date of last tune download;
- Total tune downloads since manufacture;
- ECM Tune Lock Status (Locked, Unlocked or Not Applicable).

Current Data

The data available under Current Data is:

Function Examined	Result Reported (Scale)
Fuel system status 1	open or closed loop operation
Fuel system status 2	open or closed loop operation
Calculated load value	%
Engine coolant temperature	°C
Short term fuel trim - Bank 1	%
Short term fuel trim - Bank 2	%
Intake manifold absolute pressure	mmHg
Engine speed	rpm
Vehicle speed	km/h
Ignition timing advance - cylinder 1	degrees
Intake air temperature	°C
Absolute throttle position	%
Bank 1 - oxygen sensor 1	Volts
Bank 1 - oxygen sensor 1 - short term fuel trim	%

Sensor Data

When using this function it is possible to check the status of various sensors and actuators.

The data sets are divided into seven groups - Sensor Voltages; Sensor Readings; Injector Data; Ignition Data; Idle Speed, Throttle Data and Inputs and Adaption Status. Each of these screens is described on the following pages.

Sensor Voltages

The data available under sensor voltages is:

Item Checked	Result Unit
Battery voltage	Volts
Voltage from ignition switch to ECM	Volts
Air temperature sensor voltage	Volts
Coolant temperature sensor voltage	Volts
Atmospheric pressure sensor voltage	Volts
Manifold absolute pressure sensor 1 voltage	Volts
Manifold absolute pressure sensor 2 voltage	Volts
Throttle position sensor voltage	Volts
Fuel level sensor voltage	Volts
Oxygen sensor 1 output voltage	Volts
Exhaust butterfly valve sensor voltage	Not Applicable

Sensor Readings

The data available under sensor readings is:

Item Checked	Result Unit
Air temperature	°C
Coolant temperature	°C
Barometric pressure	mmHg
Short term fuel trim‡	%
Cylinder 1 manifold absolute pressure	mmHg
Cylinder 2 manifold absolute pressure	mmHg
Cylinder 3 manifold absolute pressure	mmHg
Low fuel light	on/off
Oxygen sensor 1 short term fuel trim	%
Oxygen sensor 1 heater status	on/off
Exhaust butterfly valve sensor position	Not Applicable

Injector Data

The data available under injector data is:

Item Checked	Result Unit
Injector 1 pulse time	milliseconds
Injector 2 pulse time	milliseconds
Injector 3 pulse time	milliseconds

Ignition Data

The data available under ignition data is:

Item Checked	Result Unit
Ignition timing cyl 1	degrees BTDC
Ignition timing cyl 2	degrees BTDC
Ignition timing cyl 3	degrees BTDC
Coil dwell time	milliseconds

Idle Speed and Throttle Data

The data available under idle speed and throttle data is:

Item Checked	Result Unit
Engine speed	rpm
Idle reference speed	rpm
Idle speed control current steps	numeric
Idle speed control target steps	numeric
Throttle position	% open
Second throttle position	% open

Inputs

The data available under inputs is:

Item Checked	Result Unit
Main relay status	relay on/off
Fuel pump relay status	on/off
Starter relay status	starter on/off
Starter button condition status	switch on/off
Side stand status	up/down
Fall detection switch status	normal/over
Clutch switch status	release/grip
Neutral switch status	gear/neutral
Gear position status	numeric value or neutral
Vehicle speed	km/h
Malfunction indicator light status	MIL on/off
Cooling fan status	fan on/off
Air flap solenoid status	Not applicable
Calculated load	%
Purge valve duty cycle‡	%

‡ Applies to models fitted with a purge valve only. All other models will show **Not Applicable** in this field.

Adaption Status

Because the fuel system is adaptive, the engine management system is able to automatically adjust to new working conditions, such as changes in altitude, component wear, air leaks, etc. This screen displays information on the adaption status of the vehicle which will show if it has adapted or not.

Function Examined	Report Method
Closed Throttle Position Adapted	adapted/not adapted
Idle speed control adaption status	%
Oxygen sensor 1 adaption range (off idle)	%
Oxygen sensor 1 adaption range (idle)	%
Oxygen sensor 1 adaption status (off idle)	%
Oxygen sensor 1 adaption status (idle)	%

Function Tests

The system allows the diagnostic software to perform a series of function tests on various actuators in the engine management system. In some cases it is necessary to make a visual observation of a component and in others, if faults are present, DTCs will be logged.

The function tests available are:

Function Examined	Report Method
Instrument Panel	Observe instrument panel, refer to service manual
Idle Speed Control Stepper Motor	Observe throttle position/Stored fault code*
Purge Valve†	Listen for valve operation/Stored fault code*
Fuel Pump - Priming	Listen for fuel pump operation/Stored fault code*
Fuel Pump - Continuous Operation	Fuel pressure test/Listen for fuel pump operation/Stored fault code*
Cooling Fan Control	Observe the cooling fan/Stored fault code*

* If a fault is detected.

† If fitted

Instrument Panel Function Test

On the diagnostic software navigate to and select the 'FUNCTION TESTS' option.

Click the start button and observe the instruments for the following:

- the speedometer shows 62 mph (100 km/h);
- the neutral indicator, fuel warning, coolant warning light and malfunction indicator light (MIL) lights alternate on and off;
- coolant temperature increments up to maximum temperature;
- coolant warning light illuminates when coolant temperature gauge is at maximum;
- end of test. Instruments return to normal operation.

Adjust Tune

Using the Triumph diagnostic software, it is possible to:

- reset the adaptions;
- balance the throttle bodies.

Further functions are provided to allow correct replacement and adjustment of the:

- throttle position sensor;
- idle speed control stepper motor.

These functions are needed as, after replacement of the parts concerned, adjustments have to be made to specific Voltage settings, with the throttles set in a specific position.

To reset adaptions, see page *11-177*.

To replace and adjust the throttle position sensor, see page *11-171*.

To replace and adjust the ISC stepper motor, see page *11-175*.

To balance the throttles, see page *11-162*.

Freeze-frame Data

Freeze frame data is stored at the time a DTC is recorded (confirmed) by the ECM. If multiple DTCs are recorded, the freeze-frame data which is stored will relate to the first recorded DTC only.

By calling up freeze frame data associated with the first recorded DTC, the technician can check the engine condition at the time the fault occurred. The data available is:

Function Examined	Result Reported (Scale)
DTC	Diagnostic Trouble Code (DTC) number
Fuel system status 1	open or closed loop operation
Calculated load	%
Coolant temperature	°C
Short term fuel trim - bank 1	%
Intake manifold absolute pressure	mmHg
Engine speed	rpm
Vehicle speed	km/h
Ignition advance	degrees
Intake air temperature	°C
Throttle position	%
Oxygen sensor 1 output Voltage	Volts
Oxygen sensor 1 short term fuel trim	%

Diagnostic Trouble Codes

Diagnostic trouble codes (DTCs) are logged in the ECM memory when there is a confirmed fault in the system.

The codes are reported to the Triumph diagnostic tool as a four digit code.

As mentioned earlier, when the system detects a fault, it begins to count the number of times the fault occurs before illuminating the MIL and storing a fault code.

Similarly, if a fault clears, the ECM also records this fact and will turn off the MIL when sufficient no-fault warm-up cycles have taken place. Any fault codes will remain in the ECM memory until the required number of no-fault warm-up cycles have taken place. The number of warm-up cycles required to extinguish the MIL will always be less than the number required to remove a DTC from the ECM memory. DTCs can be removed at any time using the Triumph diagnostic tool.

The system will log the diagnostic trouble codes listed below/over:

Diagnostic Trouble Code (DTC)	Fault Description	Number of no-fault cycles before turning off MIL	Number of no-fault cycles before DTC is erased	MIL illuminated when fault is logged
P0201	Injector 1 circuit malfunction	3	40	Yes
P0202	Injector 2 circuit malfunction	3	40	Yes
P0203	Injector 3 circuit malfunction	3	40	Yes
P1201	Injector 1 open circuit/short to ground	3	40	Yes
P1202	Injector 2 open circuit/short to ground	3	40	Yes
P1203	Injector 3 open circuit/short to ground	3	40	Yes
P0335	Crankshaft sensor circuit malfunction	3	40	Yes
P0032	Oxygen sensor heater short circuit to battery	3	40	Yes
P0031	Oxygen sensor heater open circuit/short to ground	3	40	Yes
P0030	Oxygen sensor heater circuit malfunction	3	40	Yes
P0136	Oxygen sensor circuit malfunction	3	40	Yes
P0122	Throttle position sensor low input	3	40	Yes
P0123	Throttle Position sensor high input	3	40	Yes
P0351	Ignition coil 1 circuit malfunction	3	40	Yes
P0352	Ignition coil 2 circuit malfunction	3	40	Yes
P0353	Ignition coil 3 circuit malfunction	3	40	Yes
P0107	Manifold absolute pressure sensor low Voltage	3	40	Yes
P0108	Manifold absolute pressure sensor high Voltage	3	40	Yes
P1105	Manifold absolute pressure sensor pipe malfunction	3	40	Yes
P1107	Ambient air pressure sensor circuit low Voltage	3	40	Yes
P1108	Ambient air pressure sensor circuit high Voltage	3	40	Yes
P0112	Intake air temperature too high	3	40	Yes
P0113	Intake air temperature too low	3	40	Yes
P0117	Engine coolant temperature too high	3	40	Yes
P0118	Engine coolant temperature too low	3	40	Yes
P0500	Vehicle speed sensor malfunction	3	40	Yes

Diagnostic Trouble Code (DTC)	Fault Description	Number of no-fault cycles before turning off MIL	Number of no-fault cycles before DTC is erased	MIL illuminated when fault is logged
P1552	Cooling fan short circuit/open circuit	3	40	Yes
P1553	Cooling fan short to battery Voltage/over temperature	3	40	Yes
P1231	Fuel pump short circuit to ground or open circuit	3	40	Yes
P1232	Fuel pump relay short circuit to battery	3	40	Yes
P0444	Purge valve system short circuit to ground or open circuit	3	40	Yes
P0445	Purge valve system short circuit to battery	3	40	Yes
P0617	Starter relay short circuit to battery	3	40	Yes
P0616	Starter relay short circuit to ground or open circuit	3	40	Yes
P0414	Secondary air injection system short circuit to battery	3	40	Yes
P0413	Secondary air injection system short circuit to ground or open circuit	3	40	Yes
P0222	2nd throttle position sensor system low Voltage	3	40	Yes
P0223	2nd throttle position sensor high Voltage	3	40	Yes
P0638	2nd throttle circuit malfunction	3	40	Yes
P0505	Idle speed control system malfunction	3	40	Yes
P1631	Fall detection sensor circuit low Voltage	3	40	Yes
P1632	Fall detection sensor circuit high Voltage	3	40	Yes
P0560	System Voltage - battery circuit malfunction	3	40	Yes
P1500	Vehicle speed output circuit malfunction	0	40	No
P0654	Tachometer circuit malfunction	0	40	No
P1115	Coolant temperature gauge circuit malfunction	0	40	No
P0460	Fuel level sensor circuit malfunction	0	40	No
P0705	Gear position sensor circuit malfunction	0	40	No
P0656	Fuel gauge circuit malfunction	0	40	No
P1610	Low fuel output circuit malfunction	0	40	No
P0603	EEPROM fault	0	40	No
P1690	CAN communication fault (Rocket III Touring)	0	40	No
P1696	Voltage control circuit short to ground	3	40	Yes
P1697	Voltage control circuit short to Vbatt	3	40	Yes
P1698	Voltage control circuit malfunction	3	40	Yes
P1605	Tunelock (Rocket III Roadster, Touring)	Only if Tunelock is unlocked	N/A	Flashing
P1614	ECM or tune ID Incorrect	Only if Instrument ID Matching	N/A	Flashing

Diagnostic Trouble Code (DTC)	Fault Description	Number of no-fault cycles before turning off MIL	Number of no-fault cycles before DTC is erased	MIL illuminated when fault is logged
P1685	EMS main relay circuit (Rocket III Touring)	3	40	Yes
P1659	EMS ignition Voltage input circuit (Rocket III Touring)	3	40	Yes

Electrical Connectors

Before beginning any diagnosis, the following connector related information should be noted:

Note:

- **A major cause of hidden electrical faults can be traced to faulty electrical connectors. For example:**
- **Dirty/corroded terminals.**
- **Damp terminals.**
- **Broken or bent cable pins within multi-plugs.**

For example, the electronic control module (ECM) relies on the supply of accurate information to enable it to plan the correct fuelling and ignition timing. One dirty terminal will cause an excessive Voltage drop resulting in an incorrect signal to the ECM.

If, when carrying out fault diagnosis, a fault appears to clear by simply disconnecting and reconnecting an electrical plug, examine each disconnected plug for the following.

Before Disconnection:

- **If testing with a voltmeter, the Voltage across a connector should be virtually battery Volts (unless a resistor is fitted in the circuit). If there is a noticeable change, suspect faulty/dirty connections.**

When Disconnecting a Connector:

- **Check for a security device that must be released before the connector can be separated, e.g. barb, hook and eye etc.**

When Inspecting a Connector:

- **Check that the individual pins have not been bent.**
- **Check for dampness/dirt/corrosion.**
- **Check cables for security.**
- **Check cable pin joints for damage.**

When Connecting a Connector:

- **Ensure there is no dirt around the connector/seal.**
- **Push together squarely to ensure terminals are not bent or incorrectly located.**
- **Push the two halves together positively.**

Disconnection of ECM connectors

Note:

- **For Rocket III and Classic only: Two different sized connectors are used in the ECM, which ensures correct connection is always made.**
- **For Rocket III Touring only: Two different coloured and shaped connectors are used in the ECM, which ensures correct connection is always made. The connectors on the ECM are coloured black and grey, and correspond with identical coloured connectors on the main harness.**

⚠ Caution

When disconnecting a connector, never pull directly on the wires as this may result in cable and connector damage.

⚠ Caution

Never disconnect an ECM when the ignition switch is in the ON position as this may cause multiple fault codes to be logged in the ECM memory.

Always disconnect an ECM after disconnecting the battery negative (black) lead first.

1. Turn the ignition to the OFF position and wait at least 1 minute for the ECM to complete its power down sequence.

2. Press down on the locking device and gently pull back on the connector to release it from the ECM.

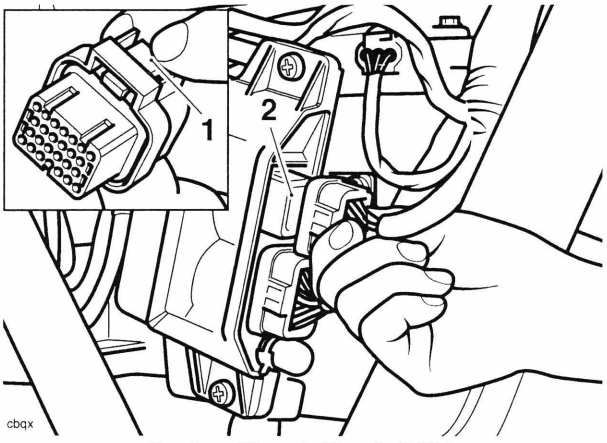

Rocket III and Classic ECM

1. **Locking device (inset)**
2. **Socket**

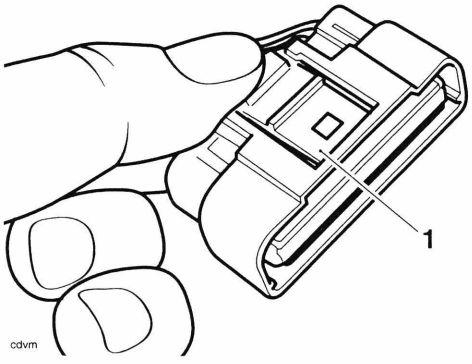

Rocket III Roadster and Touring

1. **Locking device**

Reconnection of ECM connectors

> **⚠ Caution**
>
> Damage to the connector pins may result if an attempt to fit the connectors incorrectly is made.

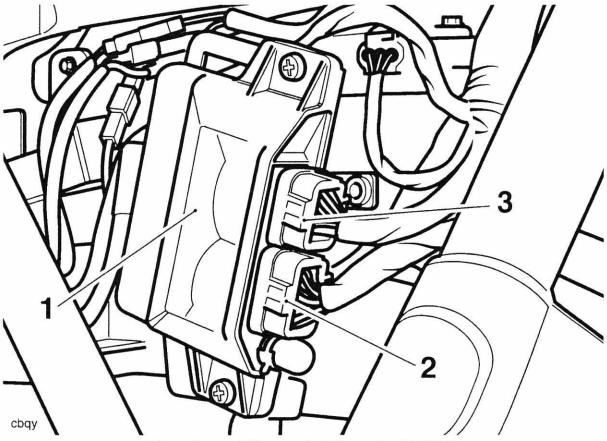

Rocket III and Classic ECM

1. **ECM**
2. **Large connector**
3. **Small connector**

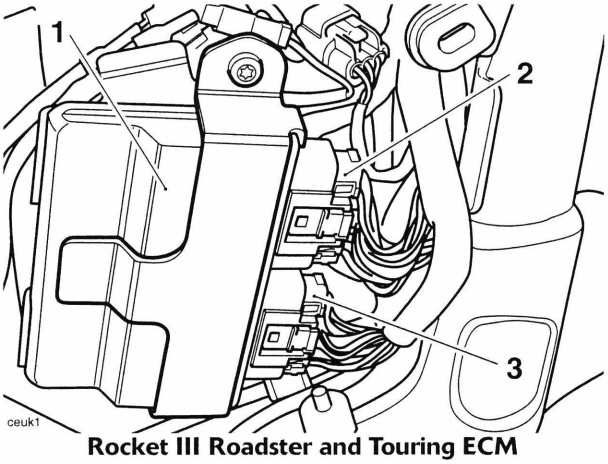

Rocket III Roadster and Touring ECM

1. **ECM**
2. **Grey connector**
3. **Black connector**

3. Fit the connector into its socket and, whilst holding the connector in place, insert it fully into the ECM until the locking device retains it.

Further Diagnosis

The tables that follow will, if used correctly, help to pinpoint a fault in the system once a diagnostic trouble code has been stored.

Crankshaft Sensor - Rocket III and Classic

Fault Code	Possible cause	Action
P0335	Crankshaft sensor system fault	View & note diagnostic tool 'freeze frame' data if available. Ensure sensor is fitted correctly and connector is secure. Disconnect ECM and proceed to pinpoint test 1:

Pinpoint Tests

	Test	Result	Action
1	Check terminal and cable integrity: - ECM pin A13 - ECM pin A14	OK	Disconnect sensor and proceed to test 2
		Faulty	Rectify fault, proceed to test 6
2	Check cable for short circuit: - ECM pin A13 to earth - ECM pin A14 to earth	OK	Proceed to test 3
		Short circuit	Locate and rectify wiring fault, proceed to test 6
3	Check cable continuity: - ECM pin A14 to sensor pin 1 - ECM pin A13 to sensor pin 2	OK	Proceed to test 4
		Open circuit	Locate and rectify wiring fault, proceed to test 6
4	Check cable for short circuit: - ECM pin A13 to ECM pin A14	OK	Renew crankshaft sensor, proceed to test 6
		Short circuit	Locate and rectify wiring fault, proceed to test 6
5	Check crank toothed wheel: - Damage to teeth - magnetic debris contamination	OK	Proceed to test 6
		Faulty	Clean / renew toothed wheel, proceed to test 6
6	Reconnect harness, clear fault code and run engine to verify fault cleared	OK	Action complete - quit test
		Fault still present	Contact Triumph service

Circuit Diagram

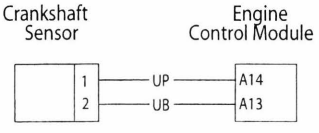

Crankshaft Sensor - Rocket III Touring and Roadster

Fault Code	Possible cause	Action
P0335	Crankshaft sensor system fault	View & note diagnostic tool 'freeze frame' data if available. Ensure sensor is fitted correctly and connector is secure. Disconnect ECM and proceed to pinpoint test 1:

Pinpoint Tests

	Test	Result	Action
1	Check terminal and cable integrity: - ECM pin A01 - ECM pin A09	OK	Disconnect sensor and proceed to test 2
		Faulty	Rectify fault, proceed to test 6
2	Check cable for short circuit: - ECM pin A01 to earth - ECM pin A09 to earth	OK	Proceed to test 3
		Short circuit	Locate and rectify wiring fault, proceed to test 6
3	Check cable continuity: - ECM pin A01 to sensor pin 1 - ECM pin A09 to sensor pin 2	OK	Proceed to test 4
		Open circuit	Locate and rectify wiring fault, proceed to test 6
4	Check cable for short circuit: - ECM pin A01 to ECM pin A09	OK	Renew crankshaft sensor, proceed to test 6
		Short circuit	Locate and rectify wiring fault, proceed to test 6
5	Check crank toothed wheel: - Damage to teeth - magnetic debris contamination	OK	Proceed to test 6
		Faulty	Clean / renew toothed wheel, proceed to test 6
6	Reconnect harness, clear fault code and run engine to verify fault cleared	OK	Action complete - quit test
		Fault still present	Contact Triumph service

Circuit Diagram

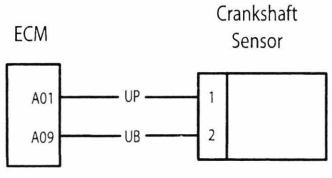

Idle Speed Control - Rocket III and Classic

Fault Code	Possible cause	Action
P0505	ISC stepper motor / wiring fault	View & note diagnostic tool 'freeze frame' data if available. View & note diagnostic tool 'sensor' data. Ensure sensor connector is secure. Disconnect ECM and proceed to pinpoint test 1:

Pinpoint Tests

	Test	Result	Action
1	Check cable and terminal integrity: - ECM pin B23 - ECM pin B07 - ECM pin B11 - ECM pin B03	OK	Proceed to test 2
		Faulty	Rectify fault, proceed to test 7
2	Check resistance value: - ECM pin B23 to ECM pin B07 - ECM pin B11 to ECM pin B03	4Ω to 12Ω	Disconnect stepper motor and proceed to test 3
		Open circuit	Proceed to test 4
		Short circuit	Disconnect stepper motor and proceed to test 5
3	Check cable for short circuit: - ECM pin B23 to earth - ECM pin B07 to earth - ECM pin B11 to earth - ECM pin B03 to earth	OK	Proceed to test 7
		Short circuit	Locate and rectify wiring fault, proceed to test 7
4	Check cable continuity: - ECM pin B23 to stepper motor pin A - ECM pin B07 to stepper motor pin A1 - ECM pin B11 to stepper motor pin B - ECM pin B03 to stepper motor pin B1	OK	Proceed to test 6
		Open circuit	Locate and rectify wiring fault, proceed to test 7
5	Check cable for short circuit: - ECM pin B23 to ECM pin B07 - ECM pin B11 to ECM pin B03	OK	Proceed to test 6
		Short circuit	Locate and rectify wiring fault, proceed to test 7
6	Check stepper motor resistance: - Motor pin A to motor pin A1 - Motor pin B to motor pin B1	4Ω to 12Ω	Proceed to test 7
		Faulty	Renew stepper motor, proceed to test 7
7	Reconnect harness, clear fault code and run diagnostic tool function test to visually verify operation of stepper motor	OK	Action complete - quit test
		Fault still present	Contact Triumph service

Circuit Diagram

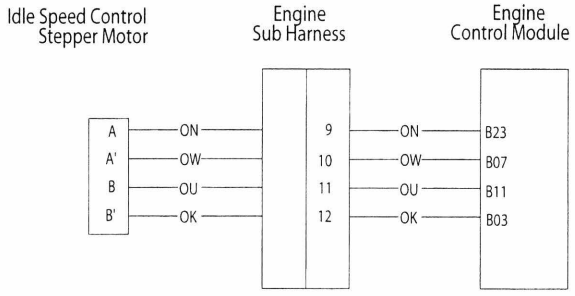

Idle Speed Control - Rocket III Touring and Roadster

Fault Code	Possible cause	Action
P0505	ISC stepper motor / wiring fault	View & note diagnostic tool 'freeze frame' data if available. View & note diagnostic tool 'sensor' data. Ensure sensor connector is secure. Disconnect ECM and proceed to pinpoint test 1:

Pinpoint Tests

	Test	Result	Action
1	Check cable and terminal integrity: - ECM pin A22 - ECM pin A23 - ECM pin A20 - ECM pin A21	OK	Proceed to test 2
		Faulty	Rectify fault, proceed to test 7
2	Check resistance value: - ECM pin A22 to ECM pin A23 - ECM pin A20 to ECM pin A21	4Ω to 12Ω	Disconnect stepper motor and proceed to test 3
		Open circuit	Proceed to test 4
		Short circuit	Disconnect stepper motor and proceed to test 5
3	Check cable for short circuit: - ECM pin A22 to earth - ECM pin A23 to earth - ECM pin A20 to earth - ECM pin A21 to earth	OK	Proceed to test 7
		Short circuit	Locate and rectify wiring fault, proceed to test 7
4	Check cable continuity: - ECM pin A22 to stepper motor pin A - ECM pin A23 to stepper motor pin A1 - ECM pin A20 to stepper motor pin B - ECM pin A21 to stepper motor pin B1	OK	Proceed to test 6
		Open circuit	Locate and rectify wiring fault, proceed to test 7
5	Check cable for short circuit: - ECM pin A20 to ECM pin A21 - ECM pin A20 to ECM pin A22 - ECM pin A20 to ECM pin A23 - ECM pin A21 to ECM pin A22 - ECM pin A21 to ECM pin A23 - ECM pin A22 to ECM pin A23	OK	Proceed to test 6
		Short circuit	Locate and rectify wiring fault, proceed to test 7
6	Check stepper motor resistance: - Motor pin A to motor pin A1 - Motor pin B to motor pin B1	4Ω to 12Ω	Proceed to test 7
		Faulty	Renew stepper motor, proceed to test 7

	Test	Result	Action
7	Reconnect harness, clear fault code and run diagnostic tool function test to visually verify operation of stepper motor	OK	Action complete - quit test
		Fault still present	Contact Triumph service

Circuit Diagram

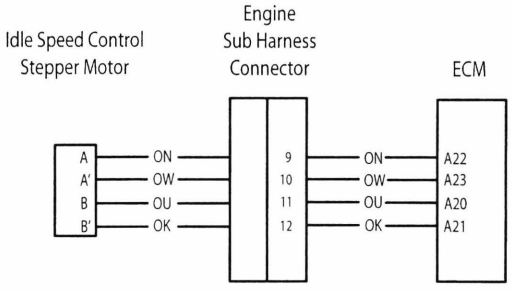

Fuel Injectors - Rocket III and Classic

Fault Code	Possible cause	Action
P0201/02/03	Injection system fault - Injector 1/2/3 - Misfire indicates open circuit - Flooding indicates short circuit	View & note diagnostic tool 'freeze frame' data if available. Ensure relevant injector connector is secure. Disconnect ECM and proceed to pinpoint test 1:

Pinpoint Tests

	Test	Result	Action
1	Check cable and terminal integrity: - ECM pin B05 - ECM pin B06 - ECM pin B17	OK	Proceed to test 2
		Faulty	Rectify fault, proceed to test 7
2	Check resistance value: - ECM pin A20 to ECM pin B05 (injector 1) - ECM pin A20 to ECM pin B06 (injector 2) - ECM pin A20 to ECM pin B17 (injector 3)	12.5Ω to 14.0Ω	Proceed to test 3
		Open circuit	Disconnect relevant injector and proceed to test 4
		Short circuit	Disconnect relevant injector and proceed to test 5
3	Check cable for short circuit to ground: - ECM pin B05 to earth - ECM pin B06 to earth - ECM pin B17 to earth	OK	Proceed to test 7
		Short circuit	Locate and rectify wiring fault, proceed to test 7
4	Check cable continuity: - ECM pin A20 to relevant injector pin 2 - ECM pin B05 to injector 1 pin 1 - ECM pin B06 to injector 2 pin 1 - ECM pin B17 to injector 3 pin 1	OK	Proceed to test 6
		Open circuit	Locate and rectify wiring fault, proceed to test 7
5	Check cable for short circuit to supply box: - ECM pin A20 to ECM pin B05 (inj 1) - ECM pin A20 to ECM pin B06 (inj 2) - ECM pin A20 to ECM pin B17 (inj 3)	OK	Proceed to test 6
		Short circuit	Locate and rectify wiring fault, proceed to test 7
6	Check relevant injector resistance: - Injector pin 1 to injector pin 2	12.5Ω to 14.0Ω	Proceed to test 7
		Faulty	Renew relevant injector, proceed to test 7
7	Reconnect harness, clear fault code and run engine to verify fault cleared	OK	Action complete - quit test
		Fault still present	Contact Triumph service

Circuit Diagram

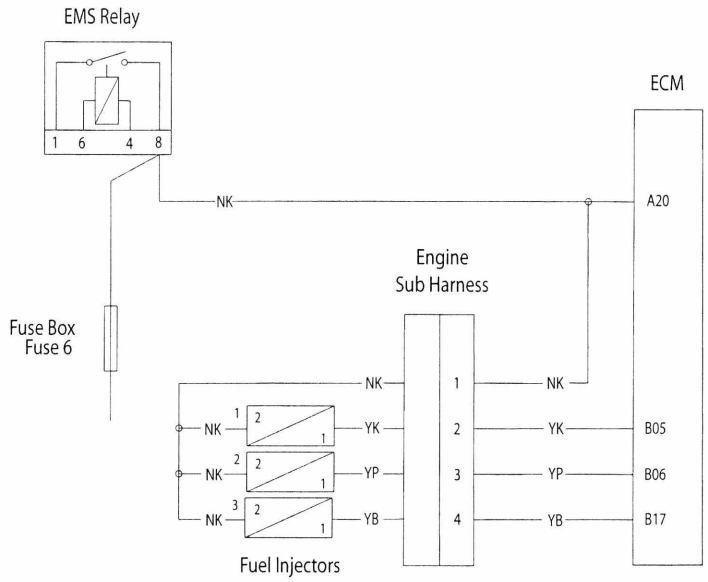

Fuel Injectors - Rocket III Touring and Roadster

Fault Code	Possible cause	Action
P0201/02/03	Injection system fault - Injector 1/2/3 - Misfire indicates open circuit - Flooding indicates short circuit	View & note diagnostic tool 'freeze frame' data if available. Ensure relevant injector connector is secure. Disconnect ECM and proceed to pinpoint test 1:

Pinpoint Tests

	Test	Result	Action
1	Check cable and terminal integrity: - ECM pin A15 - ECM pin A14 - ECM pin A13	OK	Proceed to test 2
		Faulty	Rectify fault, proceed to test 7
2	Check resistance value: - ECM pin A06 to ECM pin A15 (injector 1) - ECM pin A06 to ECM pin A14 (injector 2) - ECM pin 0A6 to ECM pin A13 (injector 3)	12.5Ω to 14.0Ω	Proceed to test 3
		Open circuit	Disconnect relevant injector and proceed to test 4
		Short circuit	Disconnect relevant injector and proceed to test 5
3	Check cable for short circuit to ground: - ECM pin A15 to earth - ECM pin A14 to earth - ECM pin A13 to earth	OK	Proceed to test 7
		Short circuit	Locate and rectify wiring fault, proceed to test 7
4	Check cable continuity: - ECM pin A06 to relevant injector pin 2 - ECM pin A15 to injector 1 pin 1 - ECM pin A14 to injector 2 pin 1 - ECM pin A13 to injector 3 pin 1	OK	Proceed to test 6
		Open circuit	Locate and rectify wiring fault, proceed to test 7
5	Check cable for short circuit to supply box: - ECM pin A06 to ECM pin A15 (inj 1) - ECM pin A06 to ECM pin A14 (inj 2) - ECM pin A06 to ECM pin A13 (inj 3)	OK	Proceed to test 6
		Short circuit	Locate and rectify wiring fault, proceed to test 7
6	Check relevant injector resistance: - Injector pin 1 to injector pin 2	12.5Ω to 14.0Ω	Proceed to test 7
		Faulty	Renew relevant injector, proceed to test 7
7	Reconnect harness, clear fault code and run engine to verify fault cleared	OK	Action complete - quit test
		Fault still present	Contact Triumph service

Circuit Diagram

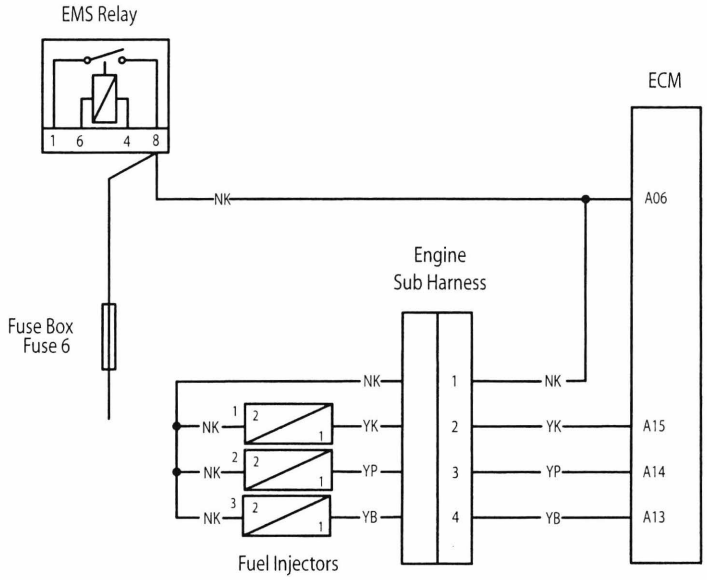

Primary Throttle Position Sensor - Rocket III and Classic

Fault Code	Possible cause	Action
P0122 P0123	Throttle position sensor low input Voltage (short to ground or open circuit) Throttle position sensor high input Voltage (short circuit to sensor supply)	View & note diagnostic tool 'freeze frame' data if available. View & note diagnostic tool 'sensor' data. Ensure sensor connector is secure. Disconnect ECM and proceed to pinpoint test 1:

Pinpoint Tests

	Test	Result	Action
1	Check cable and terminal integrity: - ECM pin A01 - ECM pin A07 - ECM pin A10	OK	Disconnect sensor and proceed to test 2
		Faulty	Rectify fault, proceed to test 5
2	Check cable for short circuit: - ECM pin A10 to ground	OK	Proceed to test 3
		Short circuit	Locate and rectify wiring fault, proceed to test 5
3	Check cable continuity: - ECM pin A01 to sensor pin 1 - ECM pin A07 to sensor pin 2 - ECM pin A10 to sensor pin 3	OK	Proceed to test 4
		Open circuit	Locate and rectify wiring fault, proceed to test 5
4	Check cable for short circuit: - ECM pin A10 to ECM pin A01 - ECM pin A10 to ECM pin A07	OK	Renew throttle position sensor, proceed to test 5
		Short circuit	Locate and rectify wiring fault, proceed to test 5
5	Reconnect harness, clear fault code and run engine to verify fault cleared	OK	Action complete - quit test
		Fault still present	Contact Triumph service

Circuit Diagram

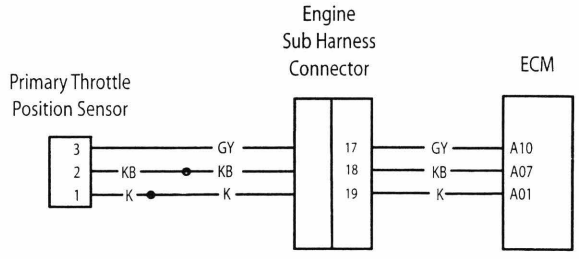

Primary Throttle Position Sensor - Rocket III Touring and Roadster

Fault Code	Possible cause	Action
P0122 P0123	Throttle position sensor low input Voltage (short to ground or open circuit) Throttle position sensor high input Voltage (short circuit to sensor supply)	View & note diagnostic tool 'freeze frame' data if available. View & note diagnostic tool 'sensor' data. Ensure sensor connector is secure. Disconnect ECM and proceed to pinpoint test 1:

Pinpoint Tests

	Test	Result	Action
1	Check cable and terminal integrity: - ECM pin A10 - ECM pin B01 - ECM pin B20	OK	Disconnect sensor and proceed to test 2
		Faulty	Rectify fault, proceed to test 5
2	Check cable for short circuit: - ECM pin A10 to ground	OK	Proceed to test 3
		Short circuit	Locate and rectify wiring fault, proceed to test 5
3	Check cable continuity: - ECM pin B01 to sensor pin 1 - ECM pin B20 to sensor pin 2 - ECM pin A10 to sensor pin 3	OK	Proceed to test 4
		Open circuit	Locate and rectify wiring fault, proceed to test 5
4	Check cable for short circuit: - ECM pin A10 to ECM pin B01 - ECM pin A10 to ECM pin B20	OK	Renew throttle position sensor, proceed to test 5
		Short circuit	Locate and rectify wiring fault, proceed to test 5
5	Reconnect harness, clear fault code and run engine to verify fault cleared	OK	Action complete - quit test
		Fault still present	Contact Triumph service

Circuit Diagram

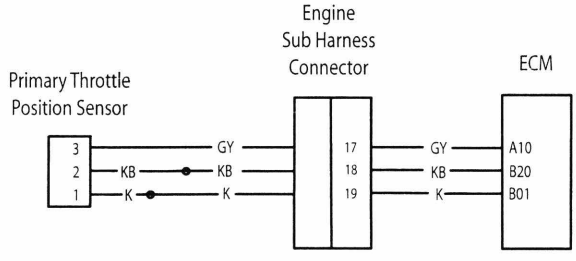

Purge Valve - Rocket III and Classic

Fault Code	Possible cause	Action
P0445	Short circuit to battery+	Disconnect the purge valve and proceed to pinpoint test 5:

Pinpoint Tests

	Test	Result	Action
1	Check cable and terminal integrity: - ECM pin B31	OK	Proceed to test 2
		Faulty	Rectify fault, proceed to test 7
2	Check resistance value: - ECM pin A20 to ECM pin B31	24Ω to 28Ω	Disconnect purge valve and proceed to test 3
		Open circuit	Proceed to test 4
		Short circuit	Disconnect purge valve and proceed to test 5
3	Check cable for short circuit: - ECM pin B31 to earth	OK	Proceed to test 7
		Short circuit	Locate and rectify wiring fault, proceed to test7
4	Check cable continuity: - ECM pin B31 to valve pin 2 - ECM pin A20 to valve pin 1	OK	Proceed to test 6
		Open circuit	Locate and rectify wiring fault, proceed to test 7
5	Check cable for short circuit: - ECM pin A20 to ECM pin B31	OK	Proceed to test 6
		Short circuit	Locate and rectify wiring fault, proceed to test 7
6	Check purge valve resistance: - Valve pin 1 to valve pin 2	24Ω to 28Ω	Proceed to test 7
		Faulty	Renew purge valve, proceed to test 7
7	Reconnect harness, clear fault code and run diagnostic tool function test to visually verify operation of purge valve	OK	Action complete - quit test
		Fault still present	Contact Triumph service

Circuit Diagram

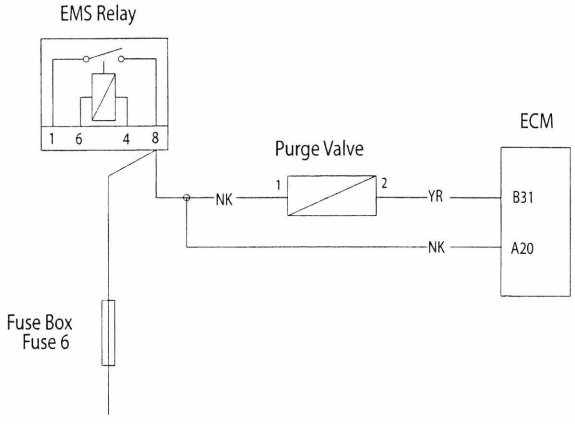

Purge Valve - Rocket III Touring and Roadster

Fault Code	Possible cause	Action
P0444	Open circuit or short circuit to earth	View & note diagnostic tool 'sensor' data. Ensure purge valve connector is secure. Disconnect ECM and proceed to pinpoint test 1:
P0445	Short circuit to battery+	Disconnect the purge valve and proceed to pinpoint test 5:

Pinpoint Tests

	Test	Result	Action
1	Check cable and terminal integrity: - ECM pin B09	OK	Proceed to test 2
		Faulty	Rectify fault, proceed to test 7
2	Check resistance value: - ECM pin A06 to ECM pin B09	24Ω to 28Ω	Disconnect purge valve and proceed to test 3
		Open circuit	Proceed to test 4
		Short circuit	Disconnect purge valve and proceed to test 5
3	Check cable for short circuit: - ECM pin B09 to earth	OK	Proceed to test 7
		Short circuit	Locate and rectify wiring fault, proceed to test 7
4	Check cable continuity: - ECM pin B09 to valve pin 2 - ECM pin A06 to valve pin 1	OK	Proceed to test 6
		Open circuit	Locate and rectify wiring fault, proceed to test 7
5	Check cable for short circuit: - ECM pin A06 to ECM pin B31	OK	Proceed to test 6
		Short circuit	Locate and rectify wiring fault, proceed to test 7
6	Check purge valve resistance: - Valve pin 1 to valve pin 2	24Ω to 28Ω	Proceed to test 7
		Faulty	Renew purge valve, proceed to test 7
7	Reconnect harness, clear fault code and run diagnostic tool function test to visually verify operation of purge valve	OK	Action complete - quit test
		Fault still present	Contact Triumph service

Circuit Diagram

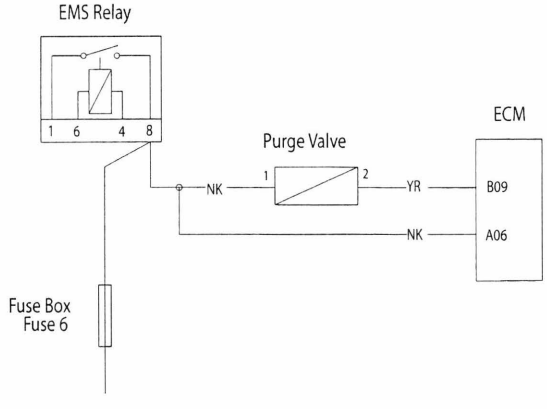

Ignition Coils - Rocket III and Classic

Fault Code	Possible cause	Action
P0351/52/53	Ignition system fault - Ign coil 1/2/3	View & note diagnostic tool 'freeze frame' data if available. Ensure relevant ign coil connector is secure. Disconnect ECM and proceed to pinpoint test 1:

Pinpoint Tests

	Test	Result	Action
1	Check cable and terminal integrity: - ECM pin B29 - ECM pin B26 - ECM pin B01	OK	Proceed to test 2
		Faulty	Rectify fault, proceed to test 7
2	Check resistance value: ECM pin A20 to - ECM pin (ign coil 1) B29 - ECM pin (ign coil 2) B26 - ECM pin (ign coil 3) B01	1.4Ω to 1.8Ω	Proceed to test 3
		Open circuit	Disconnect relevant ignition coil and proceed to test 4
		Short circuit	Disconnect relevant ignition coil and proceed to test 5
3	Check cable for short circuit: - ECM pin to earth B29 - ECM pin to earth B26 - ECM pin to earth B01	OK	Proceed to test 7
		Short circuit	Locate and rectify wiring fault, proceed to test 7
4	Check cable continuity: Power latch relay pin 8 to any ign coil pin 2 - ECM pin B29 to ign coil 1 pin 1 - ECM pin B26 to ign coil 2 pin 1 - ECM pin B01 to ign coil 3 pin 1	OK	Proceed to test 6
		Open circuit	Locate and rectify wiring fault, proceed to test 7
5	Check cable for short circuit: ECM pin A20 to - ECM pin (ign coil 1) B29 - ECM pin (ign coil 2) B26 - ECM pin (ign coil 3) B01	OK	Proceed to test 6
		Short circuit	Locate and rectify wiring fault, proceed to test 7
6	Check relevant ign coil resistance: - Ign coil pin 1 to ign coil pin 2	1.4Ω to 1.8Ω	Proceed to test 7
		Faulty	Renew relevant ignition coil, proceed to test 7
7	Reconnect harness, clear fault code and run engine to verify fault cleared	OK	Action complete - quit test
		Fault still present	Contact Triumph service

Circuit Diagram

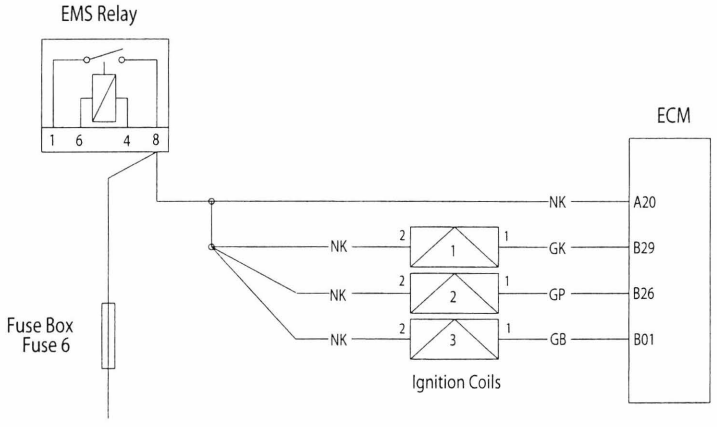

Ignition Coils - Rocket III Touring and Roadster

Fault Code	Possible cause	Action
P0351/52/53	Ignition system fault - Ign coil 1/2/3	View & note diagnostic tool 'freeze frame' data if available. Ensure relevant ign coil connector is secure. Disconnect ECM and proceed to pinpoint test 1:

Pinpoint Tests

	Test	Result	Action
1	Check cable and terminal integrity: - ECM pin B17 - ECM pin A18 - ECM pin B18	OK	Proceed to test 2
		Faulty	Rectify fault, proceed to test 7
2	Check resistance value: ECM pin A06 to - ECM pin (ign coil 1) B17 - ECM pin (ign coil 2) A18 - ECM pin (ign coil 3) B18	1.4Ω to 1.8Ω	Proceed to test 3
		Open circuit	Disconnect relevant ignition coil and proceed to test 4
		Short circuit	Disconnect relevant ignition coil and proceed to test 5
3	Check cable for short circuit: - ECM pin to earth B17 - ECM pin to earth A18 - ECM pin to earth B18	OK	Proceed to test 7
		Short circuit	Locate and rectify wiring fault, proceed to test 7
4	Check cable continuity: Power latch relay pin 8 to any ign coil pin 2 - ECM pin B17 to ign coil 1 pin 1 - ECM pin A18 to ign coil 2 pin 1 - ECM pin B18 to ign coil 3 pin 1	OK	Proceed to test 6
		Open circuit	Locate and rectify wiring fault, proceed to test 7
5	Check cable for short circuit: ECM pin A06 to - ECM pin (ign coil 1) B17 - ECM pin (ign coil 2) A18 - ECM pin (ign coil 3) B18	OK	Proceed to test 6
		Short circuit	Locate and rectify wiring fault, proceed to test 7
6	Check relevant ign coil resistance: - Ign coil pin 1 to ign coil pin 2	1.4Ω to 1.8Ω	Proceed to test 7
		Faulty	Renew relevant ignition coil, proceed to test 7
7	Reconnect harness, clear fault code and run engine to verify fault cleared	OK	Action complete - quit test
		Fault still present	Contact Triumph service

Circuit Diagram

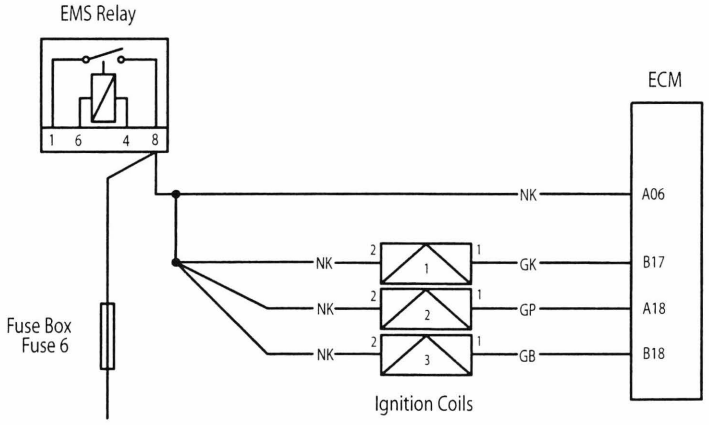

Coolant Temperature Sensor - Rocket III and Classic

Fault Code	Possible cause	Action
P0118	Open circuit, or short circuit to battery+	View & note diagnostic tool 'freeze frame' data if available. View & note diagnostic tool 'sensor' data. Ensure sensor connector is secure. Disconnect ECM and proceed to pinpoint test 1:
P0117	Short circuit to ground	Disconnect sensor and proceed to test 6:

Pinpoint Tests

	Test	Result	Action
1	Check cable and terminal integrity: - ECM pin A09 - ECM pin A07	OK	Proceed to test 2
		Faulty	Rectify fault, proceed to test 7
2	Check resistance value: - ECM pin A09 to ECM pin A07 (Temperature dependent – see below)	OK	Disconnect temp sensor and proceed to test 6
		Open circuit	Disconnect sensor and proceed to test 3
		Short circuit	Disconnect temp sensor and proceed to test 4
3	Check cable continuity: - ECM pin A09 to sensor pin 1 - ECM pin A07 to sensor pin 2	OK	Proceed to test 5
		Open circuit	Locate and rectify wiring fault, proceed to test 7
4	Check cable for short circuit: - ECM pin A09 to ECM pin A07	OK	Proceed to test 5
		Short circuit	Locate and rectify wiring fault, proceed to test 7
5	Check sensor resistance: - Sensor pin 1 to sensor pin 2 (Temperature dependent – see below)	OK	Proceed to test 7
		Faulty	Renew temp sensor, proceed to test 7
6	Check cable for short circuit: - ECM pin A09 to ground	OK	Proceed to test 7
		Short circuit	Locate and rectify wiring fault, proceed to test 7
7	Reconnect harness, clear fault code and run engine to verify fault cleared	OK	Action complete - quit test
		Fault still present	Contact Triumph service

Circuit Diagram

Resistance data under typical conditions:

Warm engine: . . . . . .200 to 400Ω

Cold engine:

20°C ambient. . . . . 2.35 to 2.65KΩ

-10°C ambient . . . . . 8.50 to 10.25KΩ

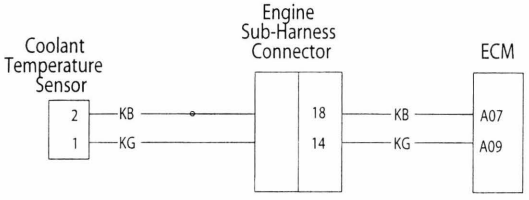

Coolant Temperature Sensor - Rocket III Touring and Roadster

Fault Code	Possible cause	Action
P0118	Open circuit, or short circuit to battery+	View & note diagnostic tool 'freeze frame' data if available. View & note diagnostic tool 'sensor' data. Ensure sensor connector is secure. Disconnect ECM and proceed to pinpoint test 1:
P0117	Short circuit to ground	Disconnect sensor and proceed to test 6:

Pinpoint Tests

Test	Result	Action
1 Check cable and terminal integrity: - ECM pin A29 - ECM pin B20	OK	Proceed to test 2
	Faulty	Rectify fault, proceed to test 7
2 Check resistance value: - ECM pin A29 to ECM pin B20 (Temperature dependent – see below)	OK	Disconnect temp sensor and proceed to test 6
	Open circuit	Disconnect sensor and proceed to test 3
	Short circuit	Disconnect temp sensor and proceed to test 4
3 Check cable continuity: - ECM pin A29 to sensor pin 1 - ECM pin B20 to sensor pin 2	OK	Proceed to test 5
	Open circuit	Locate and rectify wiring fault, proceed to test 7
4 Check cable for short circuit: - ECM pin A29 to ECM pin B20	OK	Proceed to test 5
	Short circuit	Locate and rectify wiring fault, proceed to test 7
5 Check sensor resistance: - Sensor pin 1 to sensor pin 2 (Temperature dependent – see below)	OK	Proceed to test 7
	Faulty	Renew temp sensor, proceed to test 7
6 Check cable for short circuit: - ECM pin A29 to ground	OK	Proceed to test 7
	Short circuit	Locate and rectify wiring fault, proceed to test 7
7 Reconnect harness, clear fault code and run engine to verify fault cleared	OK	Action complete - quit test
	Fault still present	Contact Triumph service

Circuit Diagram

Resistance data under typical conditions:

Warm engine: . . . . . .200 to 400Ω

Cold engine:

20°C ambient. . . . . 2.35 to 2.65KΩ

-10°C ambient . . . . . 8.50 to 10.25KΩ

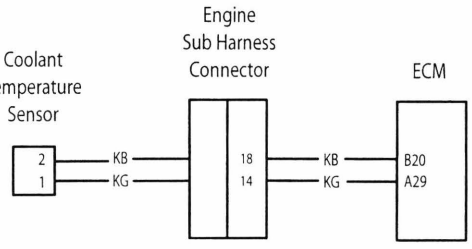

Inlet Air Temperature Sensor - Rocket III and Classic

Fault Code	Possible cause	Action
P0113	Open circuit, or short circuit to battery+	View & note diagnostic tool 'freeze frame' data if available. View & note diagnostic tool 'sensor' data. Ensure sensor connector is secure. Disconnect ECM and proceed to pinpoint test 1:
P0112	Short circuit to ground	Disconnect sensor and proceed to pinpoint test 6:

Pinpoint Tests

	Test	Result	Action
1	Check cable and terminal integrity: - ECM pin A22 - ECM pin A07	OK	Proceed to test 2
		Faulty	Rectify fault, proceed to test 7
2	Check resistance value: - ECM pin A22 to ECM pin A07 (Temperature dependent – see below)	OK	Disconnect temp sensor and proceed to test 6
		Open circuit	Disconnect temp sensor and proceed to test 3
		Short circuit	Disconnect temp sensor and proceed to test 4
3	Check cable continuity: - ECM pin A22 to sensor pin 1 - ECM pin A07 to sensor pin 2	OK	Proceed to test 5
		Open circuit	Locate and rectify wiring fault, proceed to test 7
4	Check cable for short circuit: - ECM pin A22 to ECM pin A07	OK	Proceed to test 5
		Short circuit	Locate and rectify wiring fault, proceed to test 7
5	Check sensor resistance: - Sensor pin 1 to sensor pin 2 (Temperature dependent – see below)	OK	Proceed to test 7
		Faulty	Renew temp sensor, proceed to test 7
6	Check cable for short circuit: - ECM pin A22 to ground	OK	Proceed to test 7
		Short circuit	Locate and rectify wiring fault, proceed to test 7
7	Reconnect harness, clear fault code and run engine to verify fault cleared	OK	Action complete - quit test
		Fault still present	Contact Triumph service

Circuit Diagram

If engine is warm, remove sensor and allow time to cool to ambient prior to test.

Resistance data:

Ambient temp . . . . . .Resistance value
80°C . . . . . 200 to 400Ω
20°C . . . . . .2.35 to 2.65KΩ
-10°C. . . . . 8.50 to 10.25KΩ

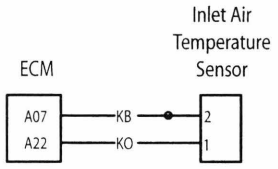

Inlet Air Temperature Sensor - Rocket III Touring and Roadster

Fault Code	Possible cause	Action
P0113	Open circuit, or short circuit to battery+	View & note diagnostic tool 'freeze frame' data if available. View & note diagnostic tool 'sensor' data. Ensure sensor connector is secure. Disconnect ECM and proceed to pinpoint test 1:
P0112	Short circuit to ground	Disconnect sensor and proceed to pinpoint test 6:

Pinpoint Tests

	Test	Result	Action
1	Check cable and terminal integrity: - ECM pin A11 - ECM pin B20	OK	Proceed to test 2
		Faulty	Rectify fault, proceed to test 7
2	Check resistance value: - ECM pin A11 to ECM pin B20 (Temperature dependent – see below)	OK	Disconnect temp sensor and proceed to test 6
		Open circuit	Disconnect temp sensor and proceed to test 3
		Short circuit	Disconnect temp sensor and proceed to test 4
3	Check cable continuity: - ECM pin A11 to sensor pin 1 - ECM pin B20 to sensor pin 2	OK	Proceed to test 5
		Open circuit	Locate and rectify wiring fault, proceed to test 7
4	Check cable for short circuit: - ECM pin A11 to ECM pin B20	OK	Proceed to test 5
		Short circuit	Locate and rectify wiring fault, proceed to test 7
5	Check sensor resistance: - Sensor pin 1 to sensor pin 2 (Temperature dependent – see below)	OK	Proceed to test 7
		Faulty	Renew temp sensor, proceed to test 7
6	Check cable for short circuit: - ECM pin A11 to ground	OK	Proceed to test 7
		Short circuit	Locate and rectify wiring fault, proceed to test 7
7	Reconnect harness, clear fault code and run engine to verify fault cleared	OK	Action complete - quit test
		Fault still present	Contact Triumph service

Circuit Diagram

If engine is warm, remove sensor and allow time to cool to ambient prior to test.

Resistance data:

Ambient temp	Resistance value
80°C	200 to 400Ω
20°C	2.35 to 2.65KΩ
-10°C	8.50 to 10.25KΩ

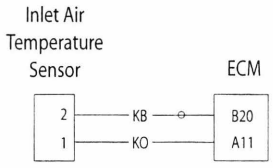

Fuel Pump Relay - Rocket III and Classic

Fault Code	Possible cause	Action
P1231	Fuel pump relay open circuit, or short circuit to ground	Check if fuel pump runs briefly when ignition is switched on. Ensure fuel pump relay connector is secure. Disconnect ECM and proceed to pinpoint test 1:
P1232	Short circuit to battery+	Disconnect fuel pump relay and proceed to pinpoint test 4:

Pinpoint Tests

	Test	Result	Action
1	Check cable and terminal integrity: - ECM pin B02	OK	Disconnect fuel pump relay and proceed to test 2
		Faulty	Rectify fault, proceed to test 5
2	Check cable for short circuit: - ECM pin B02 to earth	OK	Proceed to test 3
		Short circuit	Locate and rectify wiring fault, proceed to test 5
3	Check cable continuity: - ECM pin B02 to fuel pump relay pin 4 - Fuel pump relay pin 6 to EMS relay pin 8	OK	Proceed to test 4
		Open circuit	Locate and rectify wiring fault, proceed to test 5
4	Check cable for short circuit: - ECM pin B02 to ECM pin A20	OK	Proceed to test 5
		Short circuit	Locate and rectify wiring fault, proceed to test 5
5	Reconnect harness, clear fault code and run diagnostic tool function test to verify fault cleared	OK	Action complete - quit test
		Fault still present	Contact Triumph service

Circuit Diagram

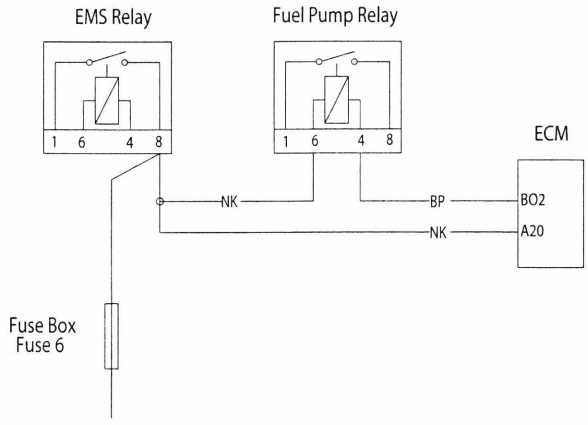

Fuel Pump Relay - Rocket III Touring and Roadster

Fault Code	Possible cause	Action
P1231	Fuel pump relay open circuit, or short circuit to ground	Check if fuel pump runs briefly when ignition is switched on. Ensure fuel pump relay connector is secure. Disconnect ECM and proceed to pinpoint test 1:
P1232	Short circuit to battery+	Disconnect fuel pump relay and proceed to pinpoint test 4:

Pinpoint Tests

	Test	Result	Action
1	Check cable and terminal integrity: - ECM pin A19 - ECM pin B29	OK	Disconnect fuel pump relay and proceed to test 2
		Faulty	Rectify fault, proceed to test 5
2	Check cable for short circuit: - ECM pin B29 to ground	OK	Proceed to test 3
		Short circuit	Locate and rectify wiring fault, proceed to test 5
3	Check cable continuity: - ECM pin B29 to fuel pump relay pin 4 - ECM pin A19 to fuel pump relay pin 6	OK	Proceed to test 4
		Open circuit	Locate and rectify wiring fault, proceed to test 5
4	Check cable for short circuit: - ECM pin B29 to ECM pin A19	OK	Proceed to test 5
		Short circuit	Locate and rectify wiring fault, proceed to test 5
5	Reconnect harness, clear fault code and run diagnostic tool function test to verify fault cleared	OK	Action complete - quit test
		Fault still present	Contact Triumph service

Circuit Diagram

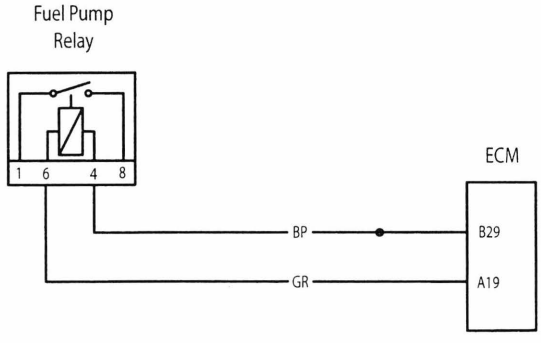

System Voltage - Rocket III and Classic

Fault Code	Possible cause	Action
P0560	Bike Voltage system fault	View & note diagnostic tool 'sensor' data. Ensure Voltage across battery is acceptable, note Voltage. Disconnect ECM and proceed to pinpoint test 1:

Pinpoint Tests

	Test	Result	Action
1	Check cable and terminal integrity: - ECM pin A20	OK	Proceed to test 2
		Faulty	Rectify fault, proceed to test 3
2	With Ignition 'on', check Voltage at: - ECM pin A20	Same as 'across battery' Voltage	Proceed to test 3
		Less than 'across battery' Voltage	Locate and rectify wiring fault, proceed to test 3
3	Reconnect harness, clear fault code and run engine to verify fault cleared	OK	Action complete - quit test
		Fault still present	Contact Triumph service

Circuit Diagram

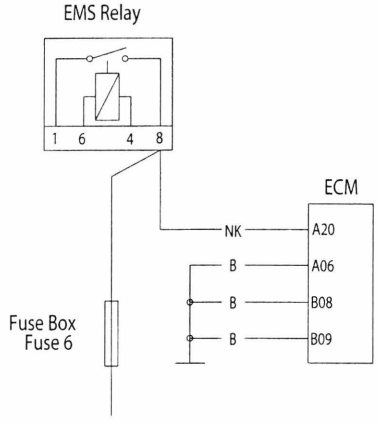

System Voltage - Rocket III Touring and Roadster

Fault Code	Possible cause	Action
P0560	Bike Voltage system fault	View & note diagnostic tool 'sensor' data. Ensure Voltage across battery is acceptable, note Voltage. Disconnect ECM and proceed to pinpoint test 1:

Pinpoint Tests

	Test	Result	Action
1	Check cable and terminal integrity: - ECM pin A20	OK	Proceed to test 2
		Faulty	Rectify fault, proceed to test 3
2	With Ignition 'on', check Voltage at: - ECM pin A06	Same as 'across battery' Voltage	Proceed to test 3
		Less than 'across battery' Voltage	Locate and rectify wiring fault, proceed to test 3
3	Reconnect harness, clear fault code and run engine to verify fault cleared	OK	Action complete - quit test
		Fault still present	Contact Triumph service

Circuit Diagram

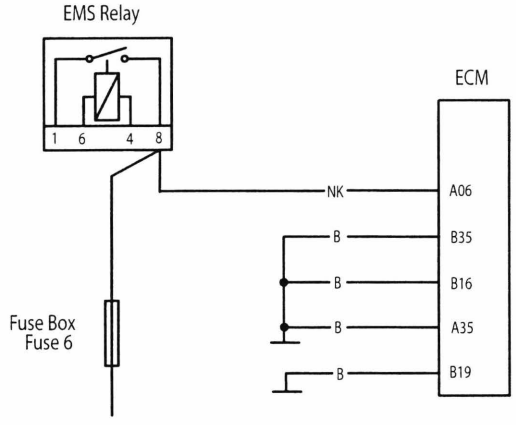

Cooling Fan Relay - Rocket III and Classic

Fault Code	Possible cause	Action
P1552	Fan relay open circuit, or short circuit to ground	View & note diagnostic tool 'sensor' data. Ensure fan relay connector is secure. Disconnect ECM and proceed to pinpoint test1:
P1553	Short circuit to battery+	Disconnect fan relay and proceed to pinpoint test 4:

Pinpoint Tests

	Test	Result	Action
1	Check cable and terminal integrity: - ECM pin B10	OK	Disconnect fan relay and proceed to test 2
		Faulty	Rectify fault, proceed to test 5
2	Check cable for short circuit: - ECM pin B10 to ground	OK	Proceed to test 3
		Short circuit	Locate and rectify wiring fault, proceed to test 5
3	Check cable continuity: - Fan relay pin 4 to ECM pin B10 - Fan relay pin 6 to EMS relay pin 8	OK	Proceed to test 4
		Open circuit	Locate and rectify wiring fault, proceed to test 5
4	Check cable for short circuit: - ECM pin B10 to ECM pin A20	OK	Proceed to test 5
		Short circuit	Locate and rectify wiring fault, proceed to test 5
5	Reconnect harness, clear fault code and run diagnostic tool function test to visually verify operation of cooling fan	OK	Action complete - quit test
		Fault still present	Contact Triumph service

Circuit Diagram

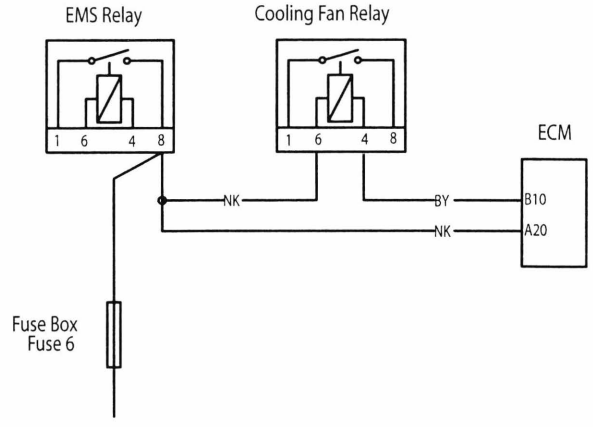

Cooling Fan Relay - Rocket III Touring and Roadster

Fault Code	Possible cause	Action
P1552	Fan relay open circuit, or short circuit to ground	View & note diagnostic tool 'sensor' data. Ensure fan relay connector is secure. Disconnect ECM and proceed to pinpoint test1:
P1553	Short circuit to battery+	Disconnect fan relay and proceed to pinpoint test 4:

Pinpoint Tests

	Test	Result	Action
1	Check cable and terminal integrity: - ECM pin B30	OK	Disconnect fan relay and proceed to test 2
		Faulty	Rectify fault, proceed to test 5
2	Check cable for short circuit: - ECM pin B30 to ground	OK	Proceed to test 3
		Short circuit	Locate and rectify wiring fault, proceed to test 5
3	Check cable continuity: - Fan relay pin 4 to ECM pin B30 - Fan relay pin 6 to ECM pin 06	OK	Proceed to test 4
		Open circuit	Locate and rectify wiring fault, proceed to test 5
4	Check cable for short circuit: - ECM pin B30 to ECM pin A06	OK	Proceed to test 5
		Short circuit	Locate and rectify wiring fault, proceed to test 5
5	Reconnect harness, clear fault code and run diagnostic tool function test to visually verify operation of cooling fan	OK	Action complete - quit test
		Fault still present	Contact Triumph service

Circuit Diagram

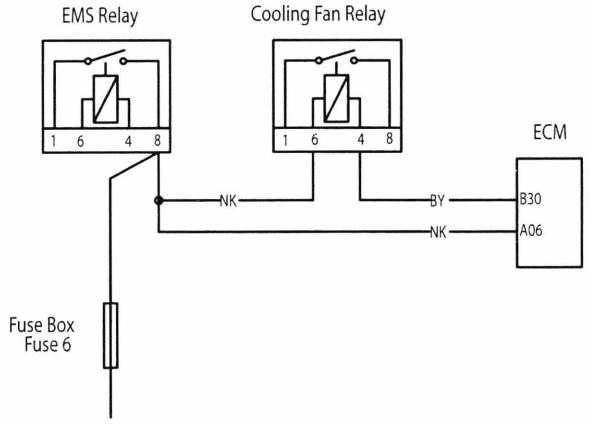

Tachometer - Rocket III and Classic

Fault Code	Possible cause	Action
P0654	Tachometer system fault	View & note 'freeze frame' data if available. View & note 'sensor' data. Ensure instrument connector is secure. Disconnect ECM and proceed to pinpoint test 1:

Pinpoint Tests

	Test	Result	Action
1	Check cable and terminal integrity: - ECM pin B14	OK	Disconnect instrument and proceed to test 2
		Faulty	Rectify fault, proceed to test 5
2	Check cable for short circuit: - ECM pin B14 to ground	OK	Proceed to test 3
		Short circuit	Locate and rectify wiring fault, proceed to test 5
3	Check cable continuity: - Instrument pin 1 to ECM pin B14 - Instrument pin 10 to earth - Instrument pin 2 to alarm control unit pin1	OK	Proceed to test 4
		Open circuit	Locate and rectify wiring fault, proceed to test 5
4	Check cable for short circuit: - ECM pin B14 to ECM pin A20	OK	Renew instruments, proceed to test 5
		Short circuit	Locate and rectify wiring fault, proceed to test 5
5	Reconnect harness, clear fault code and run diagnostic tool function test to visually verify operation of tachometer	OK	Action complete - quit test
		Fault still present	Contact Triumph service

Circuit Diagram

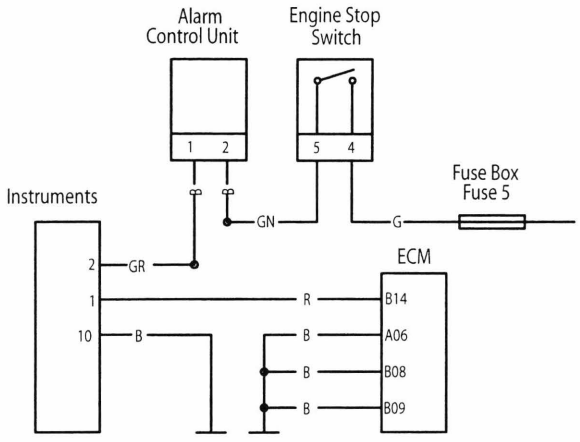

Coolant Temperature Indication - Rocket III and Classic

Fault Code	Possible cause	Action
P1115	Temperature Indication system fault	View & note 'freeze frame' data if available. View & note 'sensor' data. Ensure instrument connector is secure. Disconnect ECM and proceed to pinpoint test 1:

Pinpoint Tests

	Test	Result	Action
1	Check cable and terminal integrity: - ECM pin B08 - ECM pin A06 - ECM pin B09 - ECM pin B34	OK	Disconnect instruments and proceed to test 2
		Faulty	Rectify fault, proceed to test 5
2	Check cable for short circuit: - ECM pin B34 to ground	OK	Proceed to test 3
		Short circuit	Locate and rectify wiring fault, proceed to test 5
3	Check cable continuity: - Instrument pin 15 to ECM pin B34 - Instrument pin 10 to ground - Instrument pin 2 to alarm control unit pin 1	OK	Proceed to test 4
		Open circuit	Locate and rectify wiring fault, proceed to test 5
4	Check cable for short circuit: ECM pin B34 to ECM pin A20	OK	Renew instruments, proceed to test 5
		Short circuit	Locate and rectify wiring fault, proceed to test 5
5	Reconnect harness, clear fault code and run diagnostic tool function test to visually verify operation of instruments	OK	Action complete - quit test
		Fault still present	Contact Triumph service

Circuit Diagram

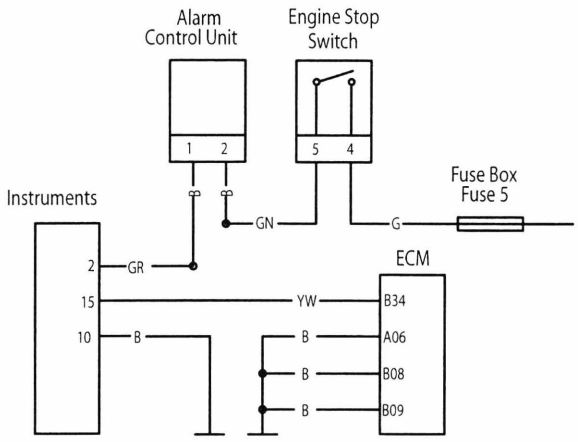

Vehicle Speed Output - Rocket III and Classic

Fault Code	Possible cause	Action
P1500	Vehicle Speed Circuit Fault	View & note 'freeze frame' data if available. View & note 'sensor' data. Ensure instrument connector is secure. Disconnect ECM and proceed to pinpoint test 1:

Pinpoint Tests

	Test	Result	Action
1	Check cable and terminal integrity: - ECM pin B32 - ECM pin B08 - ECM pin B09 - ECM pin A06	OK	Disconnect instruments and proceed to test 2
		Faulty	Rectify fault, proceed to test 5
2	Check cable for short circuit: - ECM pin B32 to ground	OK	Proceed to test 3
		Short circuit	Locate and rectify wiring fault, proceed to test 5
3	Check cable continuity: - Instrument pin 13 to ECM pin B32 - Instrument pin 10 to ground - Instrument pin 2 to alarm control unit pin 1	OK	Proceed to test 4
		Open circuit	Locate and rectify wiring fault, proceed to test 5
4	Check cable for short circuit: ECM pin A20 to ECM pin B32	OK	Renew instruments, proceed to test 5
		Short circuit	Locate and rectify wiring fault, proceed to test 5
5	Reconnect harness, clear fault code and run diagnostic tool function test to visually verify operation of speedometer.	OK	Action complete - quit test
		Fault still present	Contact Triumph service

Circuit Diagram

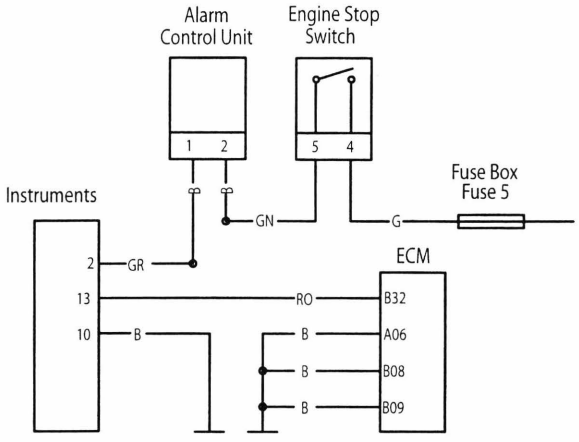

Lambda Sensor - Rocket III and Classic

Fault Code	Possible cause	Action
P0130	Lambda sensor circuit fault.	View & note "freeze frame" data if available. View & note "sensor" data. Ensure sensor connector is secure. Disconnect ECM and proceed to pinpoint test 1:

Pinpoint Tests

	Test	Result	Action
1	Check cable and terminal integrity: - ECM pin A11 - ECM pin A07	OK	Disconnect lambda sensor and proceed to test 2
		Faulty	Rectify fault, proceed to test 4
2	Check cable for short circuit: - ECM pin A11 to ECM pin A07 - ECM pin A11 to ECM pin A20	OK	Proceed to test 3
		Short circuit	Locate and rectify wiring fault, proceed to test 4
3	Check cable continuity: - ECM pin A11 to sensor pin 1 - ECM pin A07 to sensor pin 2	OK	Proceed to test 4
		Open circuit	Locate and rectify wiring fault, proceed to test 4
4	Reconnect harness, clear fault code and run engine. Check adaptation status.	OK	Action complete - quit test
		Fault still present	Contact Triumph service

Circuit Diagram

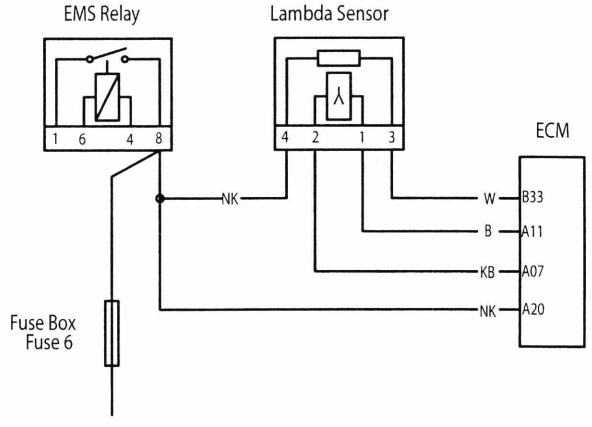

Lambda Sensor Heater - Rocket III and Classic

Fault Code	Possible cause	Action
P0031	Lambda sensor heater circuit short circuit to ground or open circuit.	View & note "freeze frame" data if available. View & note "sensor" data. Ensure sensor connector is secure. Disconnect ECM and proceed to pinpoint test 1:
P0032	Lambda sensor heater circuit, short circuit to battery.	Disconnect lambda sensor and proceed to pinpoint test 4:

Pinpoint Tests

	Test	Result	Action
1	Check cable and terminal integrity: - ECM pin B33	OK	Disconnect lambda sensor and proceed to test 2
		Faulty	Rectify fault, proceed to test 5
2	Check cable for short circuit: - ECM pin B33 to ground	OK	Proceed to test 3
		Short circuit	Locate and rectify wiring fault, proceed to test 5
3	Check cable continuity: - ECM pin B33 to sensor pin 3 - ECM pin A20 to sensor pin 4	OK	Proceed to test 5
		Open circuit	Locate and rectify wiring fault, proceed to test 5
4	Check cable for short circuit: - ECM pin B33 to ECM pin A20	OK	Renew lambda sensor and proceed to test 5
		Short circuit	Locate and rectify wiring fault, proceed to test 5
5	Reconnect harness, clear fault code and run engine. Check adaption status.	OK	Action complete, quit test
		Fault still present	Contact Triumph service

Circuit Diagram

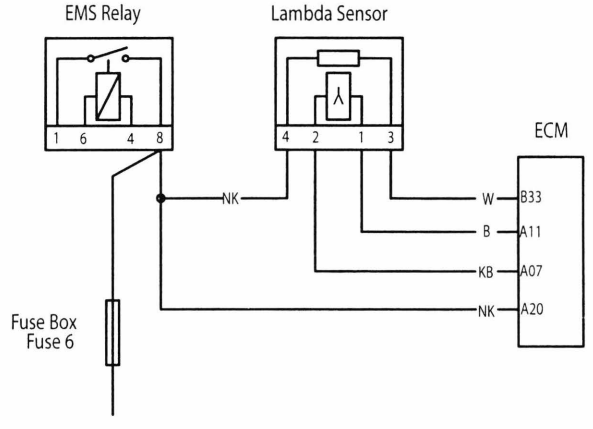

Lambda Sensor - Rocket III Touring and Roadster

Fault Code	Possible cause	Action
P0130	Lambda sensor circuit fault.	View & note "freeze frame" data if available. View & note "sensor" data. Ensure sensor connector is secure. Disconnect ECM and proceed to pinpoint test 1:

Pinpoint Tests

	Test	Result	Action
1	Check cable and terminal integrity: - ECM pin B14 - ECM pin B26	OK	Disconnect lambda sensor and proceed to test 2
		Faulty	Rectify fault, proceed to test 4
2	Check cable for short circuit: - ECM pin B14 to ECM pin B26 - ECM pin B14 to ECM pin A06	OK	Proceed to test 3
		Short circuit	Locate and rectify wiring fault, proceed to test 4
3	Check cable continuity: - ECM pin B14 to sensor pin 2 - ECM pin A26 to sensor pin 3	OK	Proceed to test 4
		Open circuit	Locate and rectify wiring fault, proceed to test 4
4	Reconnect harness, clear fault code and run engine. Check adaptation status.	OK	Action complete - quit test
		Fault still present	Contact Triumph service

Circuit Diagram

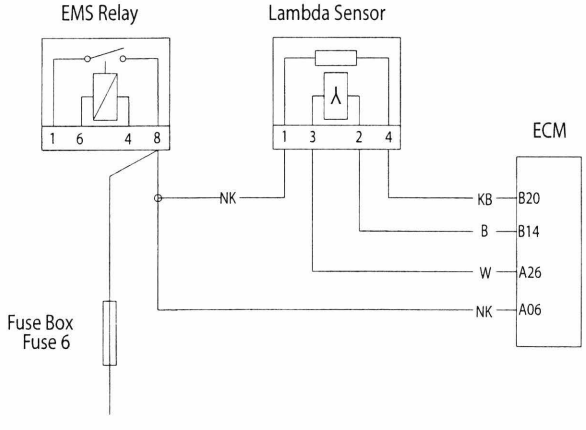

Lambda Sensor Heater - Rocket III Touring and Roadster

Fault Code	Possible cause	Action
P0031	Lambda sensor heater circuit short circuit to ground or open circuit.	View & note "freeze frame" data if available. View & note "sensor" data. Ensure sensor connector is secure. Disconnect ECM and proceed to pinpoint test 1:
P0032	Lambda sensor heater circuit, short circuit to battery.	Disconnect lambda sensor and proceed to pinpoint test 4:

Pinpoint Tests

	Test	Result	Action
1	Check cable and terminal integrity: - ECM pin A26	OK	Disconnect lambda sensor and proceed to test 2
		Faulty	Rectify fault, proceed to test 5
2	Check cable for short circuit: - ECM pin A26 to ground	OK	Proceed to test 3
		Short circuit	Locate and rectify wiring fault, proceed to test 5
3	Check cable continuity: - ECM pin B20 to sensor pin 4 - ECM pin A06 to sensor pin 1	OK	Proceed to test 5
		Open circuit	Locate and rectify wiring fault, proceed to test 5
4	Check cable for short circuit: - ECM pin A26 to ECM pin A06	OK	Renew lambda sensor and proceed to test 5
		Short circuit	Locate and rectify wiring fault, proceed to test 5
5	Reconnect harness, clear fault code and run engine. Check adaption status.	OK	Action complete, quit test
		Fault still present	Contact Triumph service

Circuit Diagram

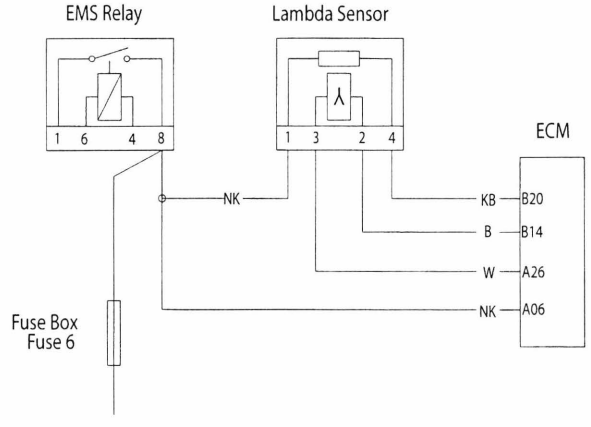

EEPROM Error

Fault Code	Possible cause	Action
P0603	EEPROM error	View & note "freeze frame" data if available. No tests available - contact Triumph service.

Fall Detection Switch - Rocket III and Classic

Fault Code	Possible cause	Action
P1631	Fall detection switch low input Voltage	View & note "freeze frame" data if available. View & note "sensor" data Ensure switch connector is secure. Disconnect ECM and proceed to pinpoint test 1:
P1632	Fall detection switch high input Voltage or open circuit	

Pinpoint Tests

	Test	Result	Action
1	Check cable and terminal integrity: - ECM pin A04	OK	Disconnect sensor and proceed to test 2
		Faulty	Rectify fault, proceed to test 6
2	Check cable for short circuit: - ECM pin A04 to ground - ECM pin A04 to ECM pin A20	OK	Proceed to test 3
		Short circuit	Locate and rectify wiring fault, proceed to test 6
3	Check cable continuity: - ECM pin A01 to sensor pin 4 - ECM pin A04 to sensor pin 5 - ECM pin A07 to sensor pin 6	OK	Proceed to test 4
		Open circuit	Locate and rectify wiring fault, proceed to test 6
4	Check cable for short circuit: - Sensor pin 4 to sensor pin 5 - Sensor pin 4 to sensor pin 6	OK	Proceed to test 5
		Short circuit	Locate and rectify wiring fault, proceed to test 6
5	Check Voltage (with ignition on): - Sensor pin 4	12V (battery Voltage)	Renew fall detection switch and proceed to test 6
		Less than 12V	Locate and rectify wiring fault, proceed to test 6
6	Reconnect harness, clear fault code.	OK	Action complete, quit test
		Fault still present	Contact Triumph service

Circuit Diagram

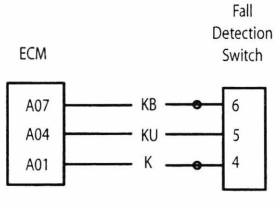

Fall Detection Switch - Rocket III Touring and Roadster

Fault Code	Possible cause	Action
P1631	Fall detection switch low input Voltage	View & note 'freeze frame' data if available. View & note 'sensor' data Ensure switch connector is secure. Disconnect ECM and proceed to pinpoint test1:
P1632	Fall detection switch high input Voltage or open circuit	

Pinpoint Tests

	Test	Result	Action
1	Check cable and terminal integrity: - ECM pin B21	OK	Disconnect sensor and proceed to test 2
		Faulty	Rectify fault, proceed to test 6
2	Check cable for short circuit: - ECM pin B21 to ground - ECM pin B21 to ECM pin A6	OK	Proceed to test 3
		Short circuit	Locate and rectify wiring fault, proceed to test 6
3	Check cable continuity: - ECM pin B1 to sensor pin 4 - ECM pin B21 to sensor pin 5 - ECM pin B20 to sensor pin 6	OK	Proceed to test 4
		Open circuit	Locate and rectify wiring fault, proceed to test 6
4	Check cable for short circuit: - Sensor pin 4 to sensor pin 5 - Sensor pin 4 to sensor pin 6	OK	Proceed to test 5
		Short circuit	Locate and rectify wiring fault, proceed to test 6
5	Check Voltage (with ignition on): - Sensor pin 4	5V	Renew fall detection switch and proceed to test 6
		Less than 4.8V	Locate and rectify wiring fault, proceed to test 6
6	Reconnect harness, clear fault code.	OK	Action complete, quit test
		Fault still present	Contact Triumph service

Circuit Diagram

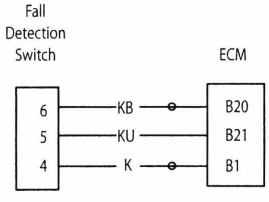

Instrument Communication (CAN) - Rocket III Touring

Fault Code	Possible cause	Action
P1690	Fault in CAN communication between ECM and Instrument pack	View & note 'freeze frame' data if available. View & note 'sensor' data. Ensure Instrument connector is secure. Disconnect ECM and proceed to pinpoint test 1:

Pinpoint Tests

	Test	Result	Action
1	Check cable and terminal integrity: - ECM pin B28 - ECM pin B27 - Instrument pin 7 - Instrument pin 8	OK	Disconnect instruments and proceed to test 2
		Faulty	Rectify fault, proceed to test 4
2	Check cable for short circuit: - ECM pin B28 to ground - ECM pin B27 to ground	OK	Proceed to test 3
		Faulty	Locate and rectify wiring fault, proceed to test 4
3	Check cable continuity: - ECM pin B28 to Instrument pin 7 - ECM pin B27 to Instrument pin 8	OK	Contact Triumph service
		Open circuit	Locate and rectify wiring fault, proceed to test 4
4	Reconnect harness, clear fault code and run engine	OK	Action complete, quit test
		Fault still present	Contact Triumph service

Circuit Diagram

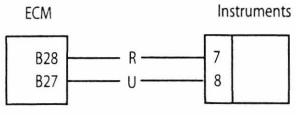

Instrument Communication (CAN) - Rocket III Roadster

Fault Code	Possible cause	Action
P1690	Fault in CAN communication between ECM and Instrument pack	View & note 'freeze frame' data if available. View & note 'sensor' data. Ensure Instrument connector is secure. Disconnect ECM and proceed to pinpoint test 1:

Pinpoint Tests

	Test	Result	Action
1	Check cable and terminal integrity: - ECM pin B28 - ECM pin B27 - Speedometer pin 11 - Speedometer pin 12 - Tachometer pin 11 - Tachometer pin 12	OK	Disconnect tachometer and speedometer and proceed to test 2
		Faulty	Rectify fault, proceed to test 4
2	Check cable for short circuit: - ECM pin B28 to ground - ECM pin B27 to ground	OK	Proceed to test 3
		Faulty	Locate and rectify wiring fault, proceed to test 4
3	Check cable continuity: - ECM pin B28 to Speedometer pin 11 - ECM pin B27 to Speedometer pin 12 - ECM pin B28 to Tachometer pin 11 - ECM pin B27 to Tachometer pin 12	OK	Contact Triumph service
		Open circuit	Locate and rectify wiring fault, proceed to test 4
4	Reconnect harness, clear fault code and run engine	OK	Action complete, quit test
		Fault still present	Contact Triumph service

Circuit Diagram

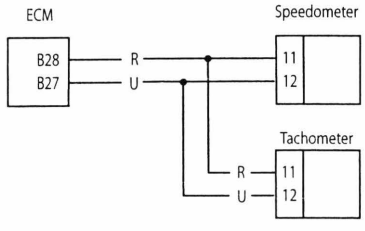

2nd Throttle Position Sensor - Rocket III and Classic

Fault Code	Possible cause	Action
P0222 P0223	2nd throttle position sensor low Voltage. (short circuit to ground or open circuit) 2nd throttle position sensor high Voltage. (short circuit to sensor supply)	View & note "freeze frame" data if available. View & note "sensor" data Ensure sensor connector is secure. Disconnect ECM and proceed to pinpoint test 1:

Pinpoint Tests

	Test	Result	Action
1	Check cable and terminal integrity: - ECM pin A01 - ECM pin A07 - ECM pin A02	OK	Disconnect sensor and proceed to test 2
		Faulty	Rectify fault, proceed to test 5
2	Check cable for short circuit: - ECM pin A02 to ground	OK	Proceed to test 3
		Short circuit	Locate and rectify wiring fault, proceed to test 5
3	Check cable continuity: - ECM pin A01 to sensor pin 1 - ECM pin A07 to sensor pin 2 - ECM pin A02 to sensor pin 3	OK	Proceed to test 4
		Open circuit	Locate and rectify wiring fault, proceed to test 5
4	Check cable for short circuit: - ECM pin A02 to ECM pin A01 - ECM pin A02 to ECM pin A07	OK	Renew 2nd throttle position sensor and proceed to test 5
		Short circuit	Locate and rectify wiring fault, proceed to test 5
5	Reconnect harness, clear fault code.	OK	Action complete, quit test
		Fault still present	Contact Triumph service

Circuit Diagram

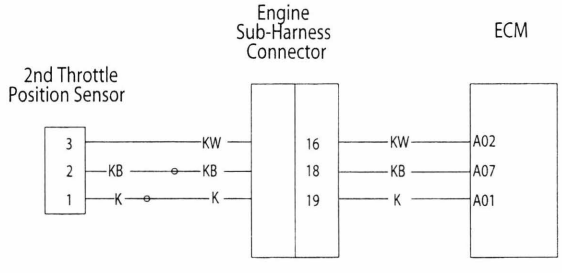

2nd Throttle Position Sensor - Rocket III Touring and Roadster

Fault Code	Possible cause	Action
P0222 P0223	2nd throttle position sensor low Voltage. (short circuit to ground or open circuit) 2nd throttle position sensor high Voltage. (short circuit to sensor supply)	View & note "freeze frame" data if available. View & note "sensor" data Ensure sensor connector is secure. Disconnect ECM and proceed to pinpoint test 1:

Pinpoint Tests

	Test	Result	Action
1	Check cable and terminal integrity: - ECM pin B01 - ECM pin B03 - ECM pin B20	OK	Disconnect sensor and proceed to test 2
		Faulty	Rectify fault, proceed to test 5
2	Check cable for short circuit: - ECM pin B03 to ground	OK	Proceed to test 3
		Short circuit	Locate and rectify wiring fault, proceed to test 5
3	Check cable continuity: - ECM pin B01 to sensor pin 1 - ECM pin B20 to sensor pin 2 - ECM pin B03 to sensor pin 3	OK	Proceed to test 4
		Open circuit	Locate and rectify wiring fault, proceed to test 5
4	Check cable for short circuit: - ECM pin B03 to ECM pin B01 - ECM pin B03 to ECM pin B20	OK	Renew 2nd throttle position sensor and proceed to test 5
		Short circuit	Locate and rectify wiring fault, proceed to test 5
5	Reconnect harness, clear fault code.	OK	Action complete, quit test
		Fault still present	Contact Triumph service

Circuit Diagram

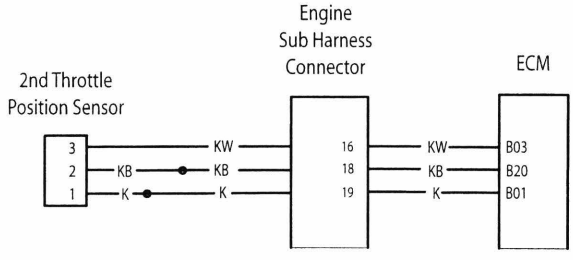

2nd Throttle Actuator - Rocket III and Classic

Fault Code	Possible cause	Action
P0638	2nd throttle actuator motor / wiring fault	View & note "freeze frame" data if available. View & note "sensor" data Ensure actuator connector is secure. Disconnect ECM and proceed to pinpoint test 1:

Pinpoint Tests

	Test	Result	Action
1	Check cable and terminal integrity: - ECM pin B21 - ECM pin B22 - ECM pin B12 - ECM pin B04	OK	Proceed to test 2
		Faulty	Rectify fault, proceed to test 7
2	Check resistance value: - ECM pin B21 to ECM pin B22 - ECM pin B12 to ECM pin B04	4Ω to 10Ω	Disconnect actuator and proceed to test 3
		Open circuit	Proceed to test 4
		Short circuit	Disconnect actuator and proceed to test 5
3	Check cable continuity: - ECM pin B21 to ground - ECM pin B22 to ground - ECM pin B12 to ground - ECM pin B04 to ground	OK	Proceed to test 7
		Short circuit	Locate and rectify wiring fault, proceed to test 7
4	Check cable continuity: - ECM pin B21 to actuator pin A - ECM pin B22 to actuator pin A - ECM pin B12 to actuator pin B - ECM pin B04 to actuator pin B	OK	Proceed to test 6
		Open circuit	Locate and rectify wiring fault, proceed to test 7
5	Check cable for short circuit: - ECM pin B21 to ECM pin B22 - ECM pin B12 to ECM pin B04	OK	Proceed to test 6
		Short circuit	Locate and rectify wiring fault, proceed to test 7
6	Check actuator resistance: - Sensor pin A to sensor pin A - Sensor pin B to sensor pin B	4Ω to 10Ω	Proceed to test 7
			renew actuator and proceed to test 7
7	Reconnect harness, clear fault code. Run diagnostic tool function test to visually verify operation of actuator	OK	Action complete, quit test
		Fault still present	Contact Triumph service

Circuit Diagram

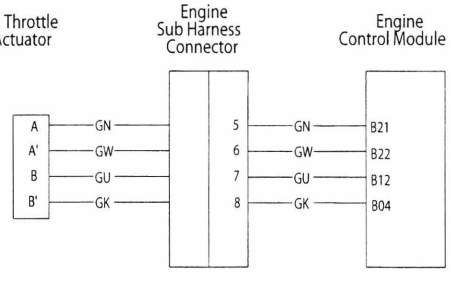

2nd Throttle Actuator - Rocket III Touring

Fault Code	Possible cause	Action
P0638	2nd throttle actuator motor / wiring fault	View & note "freeze frame" data if available. View & note "sensor" data Ensure actuator connector is secure. Disconnect ECM and proceed to pinpoint test 1:

Pinpoint Tests

	Test	Result	Action
1	Check cable and terminal integrity: - ECM pin A03 - ECM pin A02 - ECM pin A05 - ECM pin A04	OK	Proceed to test 2
		Faulty	Rectify fault, proceed to test 7
2	Check resistance value: - ECM pin A03 to ECM pin A02 - ECM pin A05 to ECM pin A04	4Ω to 10Ω	Disconnect actuator and proceed to test 3
		Open circuit	Proceed to test 4
		Short circuit	Disconnect actuator and proceed to test 5
3	Check cable continuity: - ECM pin A03 to ground - ECM pin A02 to ground - ECM pin A05 to ground - ECM pin A04 to ground	OK	Proceed to test 7
		Short circuit	Locate and rectify wiring fault, proceed to test 7
4	Check cable continuity: - ECM pin A03 to actuator pin A - ECM pin A02 to actuator pin A' - ECM pin A05 to actuator pin B - ECM pin A04 to actuator pin B'	OK	Proceed to test 6
		Open circuit	Locate and rectify wiring fault, proceed to test 7
5	Check cable for short circuit: - ECM pin A03 to ECM pin A02 - ECM pin A05 to ECM pin A04	OK	Proceed to test 6
		Short circuit	Locate and rectify wiring fault, proceed to test 7
6	Check actuator resistance: - Sensor pin A to sensor pin A' - Sensor pin B to sensor pin B'	4Ω to 10Ω	Proceed to test 7
			renew actuator and proceed to test 7
7	Reconnect harness, clear fault code. Run diagnostic tool function test to visually verify operation of actuator	OK	Action complete, quit test
		Fault still present	Contact Triumph service

Circuit Diagram

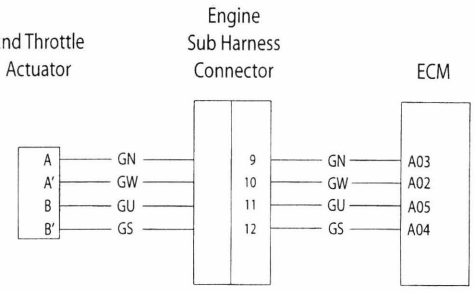

2nd Throttle Actuator - Rocket III Roadster

Fault Code	Possible cause	Action
P0638	2nd throttle actuator motor / wiring fault	View & note 'freeze frame' data if available. View & note 'sensor' data. Ensure actuator connector is secure. Disconnect ECM and proceed to pinpoint test 1:

Pinpoint Tests

	Test	Result	Action
1	Check cable and terminal integrity: - ECM pin A03 - ECM pin A02 - ECM pin A05 - ECM pin A04	OK	Proceed to test 2
		Faulty	Rectify fault, proceed to test 7
2	Check resistance value: - ECM pin A03 to ECM pin A02 - ECM pin A05 to ECM pin A04	4Ω to 10Ω	Disconnect actuator and proceed to test 3
		Open circuit	Proceed to test 4
		Short circuit	Disconnect actuator and proceed to test 5
3	Check cable continuity: - ECM pin A03 to ground - ECM pin A02 to ground - ECM pin A05 to ground - ECM pin A04 to ground	OK	Proceed to test 7
		Short circuit	Locate and rectify wiring fault, proceed to test 7
4	Check cable continuity: - ECM pin A03 to actuator pin A - ECM pin A02 to actuator pin A' - ECM pin A05 to actuator pin B - ECM pin A04 to actuator pin B'	OK	Proceed to test 6
		Open circuit	Locate and rectify wiring fault, proceed to test 7
5	Check cable for short circuit: - ECM pin A03 to ECM pin A02 - ECM pin A05 to ECM pin A04	OK	Proceed to test 6
		Short circuit	Locate and rectify wiring fault, proceed to test 7
6	Check actuator resistance: - Sensor pin A to sensor pin A' - Sensor pin B to sensor pin B'	4Ω to 10Ω	Proceed to test 7
		Faulty	Renew actuator and proceed to test 7
7	Reconnect harness, clear fault code. Run diagnostic tool function test to visually verify operation of actuator	OK	Action complete, quit test
		Fault still present	Contact Triumph service

Circuit Diagram

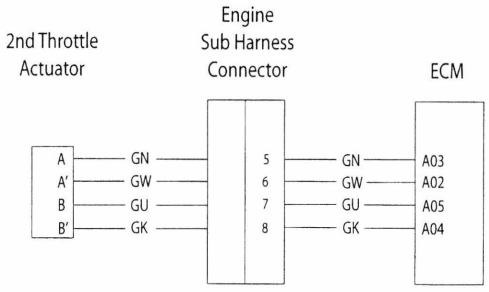

Vehicle Speed Sensor - Rocket III and Classic

Fault Code	Possible cause	Action
P0500	Vehicle speed sensor circuit fault	View & note "freeze frame" data if available. View & note "sensor" data Ensure sensor connector is secure. Disconnect ECM and proceed to pinpoint test 1:

Pinpoint Tests

	Test	Result	Action
1	Check cable and terminal integrity: - ECM pin A21 - Instrument pin 18	OK	Disconnect ambient pressure sensor and proceed to test 2
		Faulty	Rectify fault, proceed to test 4
2	Check cable for short circuit: - ECM pin A21 to ground - ECM pin A21 to ECM pin A01 - ECM pin A21 to battery	OK	Proceed to test 3
		Faulty	Locate and rectify wiring fault, proceed to test 4
3	Check cable for continuity: - ECM pin A21 to sensor pin 3 - Sensor pin 2 to ground - Instruments pin 18 to sensor pin 1	OK	Renew vehicle speed sensor and proceed to test 4
		Open circuit	Locate and rectify wiring fault, proceed to test 4
4	Reconnect harness, clear fault code and run engine.	OK	Action complete, quit test
		Fault still present	Contact Triumph service

Circuit Diagram

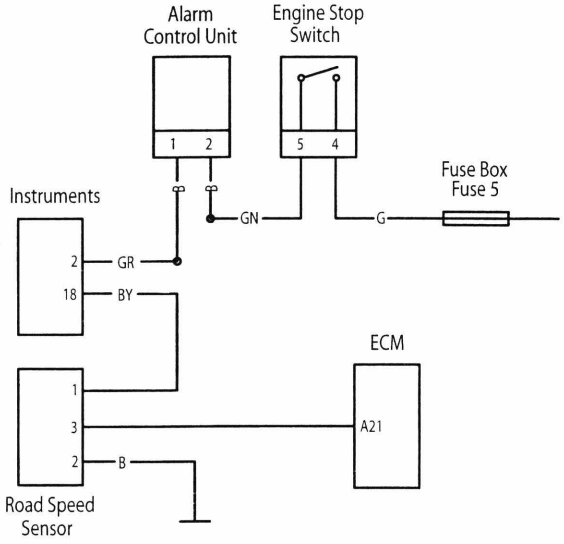

Vehicle Speed Sensor - Rocket III Touring

Fault Code	Possible cause	Action
P0500	Vehicle speed sensor circuit fault	View & note "freeze frame" data if available. View & note "sensor" data Ensure sensor connector is secure. Disconnect ECM and proceed to pinpoint test 1:

Pinpoint Tests

	Test	Result	Action
1	Check cable and terminal integrity: - ECM pin A34 - Instrument pin 3	OK	Disconnect ambient pressure sensor and proceed to test 2
		Faulty	Rectify fault, proceed to test 4
2	Check cable for short circuit: - ECM pin A34 to ground - ECM pin A34 to ECM pin B01 - ECM pin A34 to battery	OK	Proceed to test 3
		Faulty	Locate and rectify wiring fault, proceed to test 4
3	Check cable for continuity: - ECM pin A34 to sensor pin 3 - Sensor pin 2 to ground - Instruments pin 3 to sensor pin 1	OK	Renew vehicle speed sensor and proceed to test 4
		Open circuit	Locate and rectify wiring fault, proceed to test 4
4	Reconnect harness, clear fault code and run engine.	OK	Action complete, quit test
		Fault still present	Contact Triumph service

Circuit Diagram

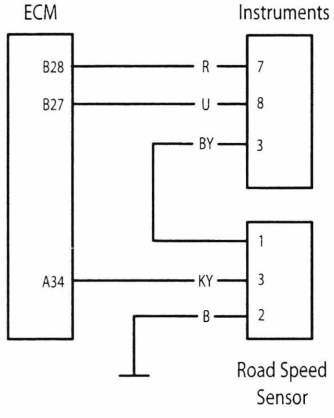

Vehicle Speed Sensor - Rocket III Roadster

Fault Code	Possible cause	Action
P0500	Vehicle speed sensor circuit fault	View & note 'freeze frame' data if available. View & note 'sensor' data. Ensure sensor connector is secure. Disconnect ECM and proceed to pinpoint test 1:

Pinpoint Tests

	Test	Result	Action
1	Check cable and terminal integrity: - ECM pin A34 - Speedometer pin 10	OK	Disconnect ambient pressure sensor and proceed to test 2
		Faulty	Rectify fault, proceed to test 4
2	Check cable for short circuit: - ECM pin A34 to ground - ECM pin A34 to ECM pin B01 - ECM pin A34 to battery	OK	Proceed to test 3
		Faulty	Locate and rectify wiring fault, proceed to test 4
3	Check cable for continuity: - ECM pin A34 to sensor pin 3 - Sensor pin 2 to ground - Speedometer pin 10 to sensor pin 1	OK	Renew vehicle speed sensor and proceed to test 4
		Open circuit	Locate and rectify wiring fault, proceed to test 4
4	Reconnect harness, clear fault code and run engine	OK	Action complete, quit test
		Fault still present	Contact Triumph service

Circuit Diagram

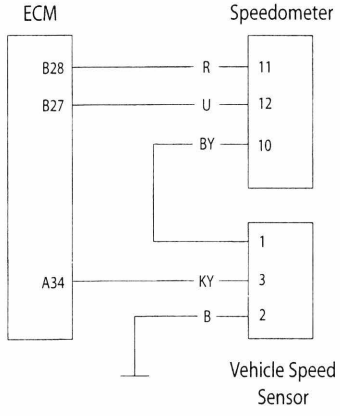

Ambient Pressure Sensor - Rocket III and Classic

Fault Code	Possible cause	Action
P1107	Ambient pressure sensor circuit short circuit to ground	View & note "freeze frame" data if available. View & note "sensor" data. Ensure sensor connector is secure. Disconnect ECM and proceed to pinpoint test 1:
P1108	Ambient pressure sensor circuit, short circuit to supply or open circuit	Disconnect ambient pressure sensor and proceed to pinpoint test 4:

Pinpoint Tests

	Test	Result	Action
1	Check cable and terminal integrity: - ECM pin A23 - ECM pin A07 - ECM pin A01	OK	Disconnect ambient pressure sensor and proceed to test 2
		Faulty	Rectify fault, proceed to test 5
2	Check cable for short circuit: - ECM pin A23 to ECM A07	OK	Proceed to test 3
		Short circuit	Locate and rectify wiring fault, proceed to test 5
3	Check cable for continuity: - ECM pin A23 to sensor pin 3 - ECM pin A07 to sensor pin 2 - ECM pin A01 to sensor pin 1	OK	Renew ambient pressure sensor and proceed to test 5
		Open circuit	Locate and rectify wiring fault, proceed to test 5
4	Check cable for short circuit: - ECM pin A23 to ECM pin A01	OK	Renew ambient pressure sensor and proceed to test 5
		Short circuit	Locate and rectify wiring fault, proceed to test 5
5	Reconnect harness, clear fault code and run engine	OK	Action complete, quit test
		Fault still present	Contact Triumph service

Circuit Diagram

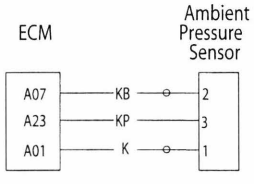

Ambient Pressure Sensor - Rocket III Touring

Fault Code	Possible cause	Action
P1107	Ambient pressure sensor circuit short circuit to ground	View & note "freeze frame" data if available. View & note "sensor" data. Ensure sensor connector is secure. Disconnect ECM and proceed to pinpoint test 1:
P1108	Ambient pressure sensor circuit, short circuit to supply or open circuit	Disconnect ambient pressure sensor and proceed to pinpoint test 4:

Pinpoint Tests

	Test	Result	Action
1	Check cable and terminal integrity: - ECM pin A27 - ECM pin B20 - ECM pin B01	OK	Disconnect ambient pressure sensor and proceed to test 2
		Faulty	Rectify fault, proceed to test 5
2	Check cable for short circuit: - ECM pin A27 to ECM B20	OK	Proceed to test 3
		Short circuit	Locate and rectify wiring fault, proceed to test 5
3	Check cable for continuity: - ECM pin A27 to sensor pin 1 - ECM pin B20 to sensor pin 2 - ECM pin B01 to sensor pin 3	OK	Renew ambient pressure sensor and proceed to test 5
		Open circuit	Locate and rectify wiring fault, proceed to test 5
4	Check cable for short circuit: - ECM pin A27 to ECM pin B01	OK	Renew ambient pressure sensor and proceed to test 5
		Short circuit	Locate and rectify wiring fault, proceed to test 5
5	Reconnect harness, clear fault code and run engine	OK	Action complete, quit test
		Fault still present	Contact Triumph service

Circuit Diagram

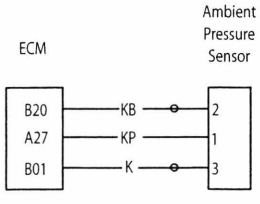

Ambient Pressure Sensor Rocket III Roadster

Fault Code	Possible cause	Action
P1107	Ambient pressure sensor circuit short circuit to ground	View & note 'freeze frame' data if available. View & note 'sensor' data. Ensure sensor connector is secure. Disconnect ECM and proceed to pinpoint test 1:
P1108	Ambient pressure sensor circuit, short circuit to supply or open circuit	Disconnect ambient pressure sensor and proceed to pinpoint test 4:

Pinpoint Tests

	Test	Result	Action
1	Check cable and terminal integrity: - ECM pin A27 - ECM pin B20 - ECM pin B01	OK	Disconnect ambient pressure sensor and proceed to test 2
		Faulty	Rectify fault, proceed to test 5
2	Check cable for short circuit: - ECM pin A27 to ECM B20	OK	Proceed to test 3
		Short circuit	Locate and rectify wiring fault, proceed to test 5
3	Check cable for continuity: - ECM pin A27 to sensor pin 3 - ECM pin B20 to sensor pin 2 - ECM pin B01 to sensor pin 1	OK	Renew ambient pressure sensor and proceed to test 5
		Open circuit	Locate and rectify wiring fault, proceed to test 5
4	Check cable for short circuit: - ECM pin A27 to ECM pin B01	OK	Renew ambient pressure sensor and proceed to test 5
		Short circuit	Locate and rectify wiring fault, proceed to test 5
5	Reconnect harness, clear fault code and run engine	OK	Action complete, quit test
		Fault still present	Contact Triumph service

Circuit Diagram

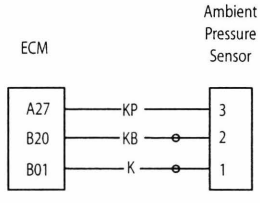

Manifold Absolute Pressure (MAP) Sensor - Rocket III and Classic

Fault Code	Possible cause	Action
P0107	MAP sensor circuit short circuit to ground	View & note "freeze frame" data if available. View & note "sensor" data Ensure sensor connector is secure. Disconnect ECM and proceed to pinpoint test 1:
P0108	MAP sensor circuit, short circuit to supply or open circuit	Disconnect MAP sensor and proceed to test 4:
P1105	MAP sensor pipe fault	Check connection/condition of pipe from MAP sensor to throttle body

Pinpoint Tests

	Test	Result	Action
1	Check cable and terminal integrity: - ECM pin A03 - ECM pin A07 - ECM pin A01	OK	Disconnect MAP sensor and proceed to test 2
		Faulty	Rectify fault, proceed to test 5
2	Check cable for short circuit: - ECM pin A03 to ECM A07	OK	Proceed to test 3
		Short circuit	Locate and rectify wiring fault, proceed to test 5
3	Check cable for continuity: - ECM pin A03 to sensor pin 3 - ECM pin A07 to sensor pin 2 - ECM pin A01 to sensor pin 1	OK	Renew MAP sensor and proceed to test 5
		Open circuit	Locate and rectify wiring fault, proceed to test 5
4	Check cable for short circuit: - ECM pin A03 to ECM pin A01	OK	Renew MAP sensor and proceed to test 5
		Short circuit	Locate and rectify wiring fault, proceed to test 5
5	Reconnect harness, clear fault code and run engine	OK	Action complete, quit test
		Fault still present	Contact Triumph service

Circuit Diagram

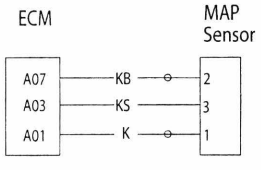

Manifold Absolute Pressure (MAP) Sensor - Rocket III Touring

Fault Code	Possible cause	Action
P0107	MAP sensor circuit short circuit to ground	View & note 'freeze frame' data if available. View & note 'sensor' data. Ensure sensor connector is secure. Disconnect ECM and proceed to pinpoint test1:
P0108	MAP sensor circuit, short circuit to supply or open circuit	Disconnect MAP sensor and proceed to test 4:
P1105	MAP sensor pipe fault	Check connection/condition of pipe from MAP sensor to throttle body

Pinpoint Tests

	Test	Result	Action
1	Check cable and terminal integrity: - ECM pin A28 - ECM pin B20 - ECM pin B1	OK	Disconnect MAP sensor and proceed to test 2
		Faulty	Rectify fault, proceed to test 5
2	Check cable for short circuit: - ECM pin A28 to ECM B20	OK	Proceed to test 3
		Short circuit	Locate and rectify wiring fault, proceed to test 5
3	Check cable for continuity: - ECM pin A28 to sensor pin 1 - ECM pin B20 to sensor pin 2 - ECM pin B1 to sensor pin 3	OK	Renew MAP sensor and proceed to test 5
		Open circuit	Locate and rectify wiring fault, proceed to test 5
4	Check cable for short circuit: - ECM pin A28 to ECM pin B1	OK	Renew MAP sensor and proceed to test 5
		Short circuit	Locate and rectify wiring fault, proceed to test 5
5	Reconnect harness, clear fault code and run engine	OK	Action complete, quit test
		Fault still present	Contact Triumph service

Circuit Diagram

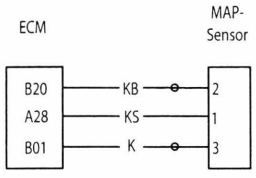

Manifold Absolute Pressure (Map) Sensor Rocket III Roadster

Fault Code	Possible cause	Action
P0107	MAP sensor circuit short circuit to ground	View & note 'freeze frame' data if available. View & note 'sensor' data. Ensure sensor connector is secure. Disconnect ECM and proceed to pinpoint test 1:
P0108	MAP sensor circuit, short circuit to supply or open circuit	Disconnect MAP sensor and proceed to test 4:
P1105	MAP sensor pipe fault	Check connection/condition of pipe from MAP sensor to throttle body.

Pinpoint Tests

	Test	Result	Action
1	Check cable and terminal integrity: - ECM pin A28 - ECM pin B20 - ECM pin B1	OK	Disconnect MAP sensor and proceed to test 2
		Faulty	Rectify fault, proceed to test 5
2	Check cable for short circuit: - ECM pin A28 to ECM B20	OK	Proceed to test 3
		Short circuit	Locate and rectify wiring fault, proceed to test 5
3	Check cable for continuity: - ECM pin A28 to sensor pin 3 - ECM pin B20 to sensor pin 2 - ECM pin B1 to sensor pin 1	OK	Renew MAP sensor and proceed to test 5
		Open circuit	Locate and rectify wiring fault, proceed to test 5
4	Check cable for short circuit: - ECM pin A28 to ECM pin B1	OK	Renew MAP sensor and proceed to test 5
		Short circuit	Locate and rectify wiring fault, proceed to test 5
5	Reconnect harness, clear fault code and run engine	OK	Action complete, quit test
		Fault still present	Contact Triumph service

Circuit Diagram

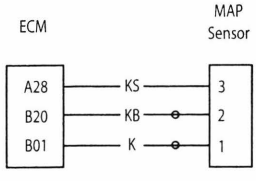

Gear Position Sensor - Rocket III and Classic

Fault Code	Possible cause	Action
P0705	Gear position sensor circuit fault	View & note "freeze frame" data if available. View & note "sensor" data Ensure sensor connector is secure. Disconnect ECM and proceed to pinpoint test 1:

Pinpoint Tests

	Test	Result	Action
1	Check cable and terminal integrity: - ECM pin A26	OK	Disconnect sensor and proceed to test 2
		Faulty	Rectify fault, proceed to test 5
2	Check cable for short circuit: - ECM pin A26 to ground	OK	Proceed to test 3
		Short circuit	Locate and rectify wiring fault, proceed to test 5
3	Check cable continuity: - ECM pin A26 to sensor pin 1 - ECM pin A19 to sensor pin 2	OK	Proceed to test 4
		Open circuit	Locate and rectify wiring fault, proceed to test 5
4	Check cable for short circuit: - Sensor pin 1 to sensor pin 2	OK	Renew gear position sensor and contact pin and proceed to test 5
		Short circuit	Locate and rectify wiring fault, proceed to test 5
5	Reconnect harness, clear fault code.	OK	Action complete, quit test
		Fault still present	Contact Triumph service

Circuit Diagram

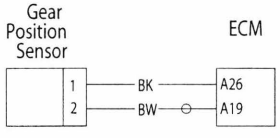

Gear Position Sensor - Rocket III Touring and Roadster

Fault Code	Possible cause	Action
P0705	Gear position sensor circuit fault	View & note "freeze frame" data if available. View & note "sensor" data Ensure sensor connector is secure. Disconnect ECM and proceed to pinpoint test 1:

Pinpoint Tests

	Test	Result	Action
1	Check cable and terminal integrity: - ECM pin A31 - ECM pin B24	OK	Disconnect sensor and proceed to test 2
		Faulty	Rectify fault, proceed to test 5
2	Check cable for short circuit: - ECM pin A31 to ground - ECM pin B24 to ground	OK	Proceed to test 3
		Short circuit	Locate and rectify wiring fault, proceed to test 5
3	Check cable continuity: - ECM pin B24 to sensor pin 1 - ECM pin B20 to sensor pin 2 - ECM pin B31 to sensor pin 3	OK	Proceed to test 4
		Open circuit	Locate and rectify wiring fault, proceed to test 5
4	Check cable for short circuit: - Sensor pin 1 to sensor pin 2 - Sensor pin 1 to sensor pin 3 - Sensor pin 2 to sensor pin 3	OK	Renew gear position sensor and contact pin and proceed to test 5
		Short circuit	Locate and rectify wiring fault, proceed to test 5
5	Reconnect harness, clear fault code.	OK	Action complete, quit test
		Fault still present	Contact Triumph service

Circuit Diagram

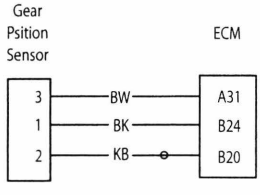

Fuel Level Sensor Circuit - Rocket III and Classic

Fault Code	Possible cause	Action
P0460	Fuel level sensor circuit fault	View & note "freeze frame" data if available. View & note "sensor" data Ensure sensor connector is secure. Disconnect ECM and proceed to pinpoint test 1:

Pinpoint Tests

	Test	Result	Action
1	Check cable and terminal integrity: - ECM pin A24 - ECM pin A06	OK	Disconnect sensor and proceed to test 2
		Faulty	Rectify fault, proceed to test 5
2	Check cable for short circuit: - ECM pin A24 to ground	OK	Proceed to test 3
		Short circuit	Locate and rectify wiring fault, proceed to test 5
3	Check cable continuity: - ECM pin A24 to sensor pin 4 - ECM pin A06 to sensor pin 3	OK	Proceed to test 4
		Open circuit	Locate and rectify wiring fault, proceed to test 5
4	Check cable for short circuit: - Sensor pin 3 to sensor pin 4	OK	Renew fuel level sensor and proceed to test 5
		Short circuit	Locate and rectify wiring fault, proceed to test 5
5	Reconnect harness, clear fault code.	OK	Action complete, quit test
		Fault still present	Contact Triumph service

Circuit Diagram

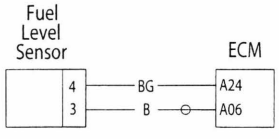

Fuel Level Sensor Circuit - Rocket III Touring

Fault Code	Possible cause	Action
P0460	Fuel level sensor circuit fault	View & note "freeze frame" data if available. View & note "sensor" data Ensure sensor connector is secure. Disconnect ECM and proceed to pinpoint test 1:

Pinpoint Tests

	Test	Result	Action
1	Check cable and terminal integrity: - ECM pin B04 - ECM pin B20	OK	Disconnect sensor and proceed to test 2
		Faulty	Rectify fault, proceed to test 5
2	Check cable for short circuit: - ECM pin B04 to ground	OK	Proceed to test 3
		Short circuit	Locate and rectify wiring fault, proceed to test 5
3	Check cable continuity: - ECM pin B04 to sensor pin 1 - ECM pin B20 to sensor pin 2	OK	Proceed to test 4
		Open circuit	Locate and rectify wiring fault, proceed to test 5
4	Check cable for short circuit: - Sensor pin 1 to sensor pin 2	OK	Renew fuel level sensor and proceed to test 5
		Short circuit	Locate and rectify wiring fault, proceed to test 5
5	Reconnect harness, clear fault code.	OK	Action complete, quit test
		Fault still present	Contact Triumph service

Circuit Diagram

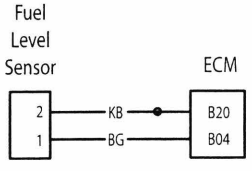

Fuel Level Sensor Circuit - Rocket III Roadster

Fault Code	Possible cause	Action
P0460	Fuel level sensor circuit fault	View & note 'freeze frame' data if available. View & note 'sensor' data. Ensure sensor connector is secure. Disconnect ECM and proceed to pinpoint test 1:

Pinpoint Tests

	Test	Result	Action
1	Check cable and terminal integrity: - ECM pin B04 - ECM pin B20	OK	Disconnect sensor and proceed to test 2
		Faulty	Rectify fault, proceed to test 5
2	Check cable for short circuit: - ECM pin B04 to ground	OK	Proceed to test 3
		Short circuit	Locate and rectify wiring fault, proceed to test 5
3	Check cable continuity: - ECM pin B04 to sensor pin 3 - ECM pin B20 to sensor pin 4	OK	Proceed to test 4
		Open circuit	Locate and rectify wiring fault, proceed to test 5
4	Check cable for short circuit: - Sensor pin 3 to sensor pin 4	OK	Renew fuel level sensor and proceed to test 5
		Short circuit	Locate and rectify wiring fault, proceed to test 5
5	Reconnect harness, clear fault code	OK	Action complete, quit test
		Fault still present	Contact Triumph service

Circuit Diagram

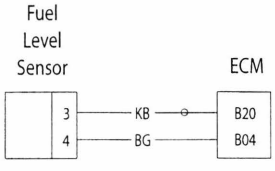

Fuel Level Warning Light Circuit - Rocket III and Classic

Fault Code	Possible cause	Action
P1610	Low fuel alarm light fault	Ensure instrument connector is secure. Disconnect ECM and proceed to pinpoint test 1:

Pinpoint Tests

	Test	Result	Action
1	Check cable and terminal integrity: - ECM pin A30 - Instrument pin 4	OK	Proceed to test 2
		Faulty	Rectify fault, proceed to test 4
2	Check cable for short circuit: - ECM pin A30 to ground	OK	Disconnect instrument assembly and proceed to test 3
		Short circuit	Locate and rectify wiring fault, proceed to test 4
3	Check cable continuity: - ECM pin A30 to instrument pin 4 - Instrument pin 10 to ground - Instrument pin 2 to alarm control unit pin 1	OK	Renew instruments and proceed to test 4
		Open circuit	Locate and rectify wiring fault, proceed to test 4
4	Reconnect harness, clear fault code and run diagnostic tool function test to visually verify operation of instruments	OK	Action complete, quit test
		Fault still present	Contact Triumph service

Circuit Diagram

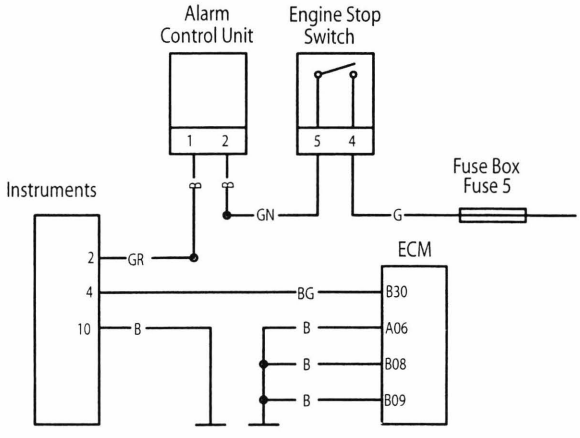

Fuel Level Gauge - Rocket III and Classic

Fault Code	Possible cause	Action
P0656	Accessory fuel level gauge circuit fault	Ensure fuel level gauge connector is secure. Disconnect ECM and proceed to pinpoint test 1:

Pinpoint Tests

	Test	Result	Action
1	Check cable and terminal integrity: - ECM pin A08 - Gauge pin 1	OK	Disconnect gauge and proceed to test 2
		Faulty	Rectify fault, proceed to test 4
2	Check cable for short circuit: - ECM pin A08 to ground - ECM pin A08 to ECM pin A20	OK	Proceed to test 3
		Short circuit	Locate and rectify wiring fault, proceed to test 4
3	Check cable continuity: - ECM pin A08 to gauge pin 1 - Gauge pin 2 to earth - Gauge pin 3 to alarm control unit pin 1	OK	Renew gauge and proceed to test 4
		Open circuit	Locate and rectify wiring fault, proceed to test 4
4	Reconnect harness, clear fault code.	OK	Action complete, quit test
		Fault still present	Contact Triumph service

Circuit Diagram

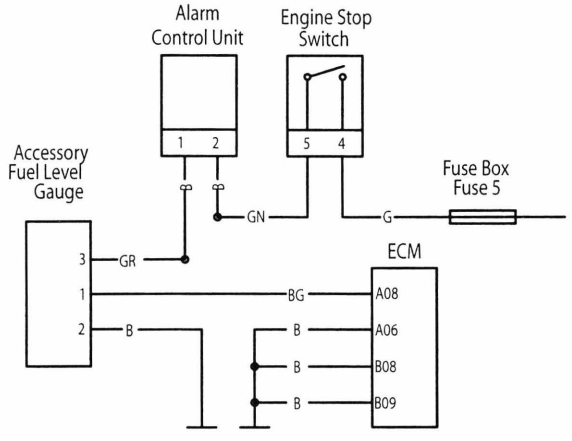

EMS Main Relay Circuit - Rocket III Touring

Fault Code	Possible cause	Action
P1685	EMS Main Relay circuit fault	Note that the Starter Motor cannot be powered if a Main Relay fault exists. Ensure the EMS Main Relay connector is secure. Proceed to pinpoint test 1:

Pinpoint Tests

	Test	Result	Action
1	Ensure ignition has been switched off for greater than one minute. Identify EMS Main Relay on the harness. Check that relay operates when the ignition is switched ON.	OK	Proceed to test 2
		Faulty	Disconnect ECM and proceed to test 4
2	Check fuse box Fuse 6 integrity	OK	Disconnect ECM and proceed to test 4
		Faulty	Disconnect ECM and proceed to test 3
3	Check cable for short circuit: - ECM pin A06 to ground - EMS Main relay pin 1 to ground	OK	Replace Fuse 6 and proceed to test 4
		Short circuit	Locate and rectify wiring fault, replace Fuse 6 and proceed to test 7
4	Check cable and terminal integrity: - ECM pin A06 - ECM pin B15 - EMS Main Relay pin 1 - EMS Main Relay pin 4 - EMS Main Relay pin 6 - EMS Main Relay pin 8	OK	Disconnect Main Relay and proceed to test 5
		Faulty	Rectify fault, proceed to test 7
5	Check cable for short circuit: - ECM pin B15 to ground	OK	Disconnect instruments and proceed to test 6
		Short circuit	Locate and rectify wiring fault, proceed to test 7
6	Check cable continuity: - ECM pin A06 to EMS Relay pin 8 - ECM pin B15 to Relay pin 6 - EMS Main Relay pin 2 to Instruments pin 4 - EMS Main Relay pin 1 to Fuse box Fuse 6	OK	Replace EMS Main Relay and proceed to test 7
		Open circuit	Locate and rectify wiring fault, proceed to test 7
7	Reconnect harness, clear fault code. Switch ignition off for longer than one minute. Switch ignition on and check that the EMS main relay operates. Start engine as final check	OK	Action complete - quit test
		Fault still present	Contact Triumph service

Circuit Diagram

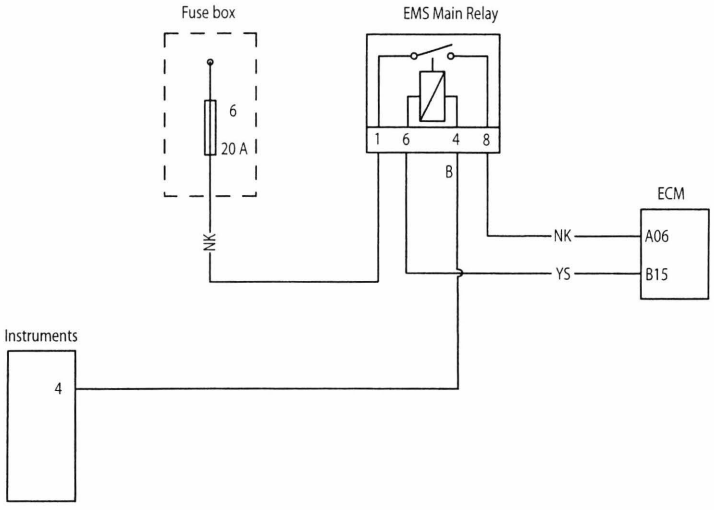

EMS Ignition Voltage Input Circuit - Rocket III Touring

Fault Code	Possible cause	Action
P1659	EMS Ignition Voltage input circuit fault	Disconnect ECM and proceed to pinpoint test 1:

Pinpoint Tests

	Test	Result	Action
1	Check Fuse box Fuse 5 integrity	OK	Proceed to test 3
		Faulty	Proceed to test 2
2	Check cable for short circuit: - ECM pin A19 to ground	OK	Replace Fuse 2 and proceed to test 3
		Short circuit	Locate and rectify wiring fault, replace Fuse 2 and proceed to test 5
3	Check cable and terminal integrity: - ECM pin A19 - Alarm Connector pin 1 - Alarm Connector pin 2 - Right hand switch cube pin 5 - Right hand switch cube pin 6	OK	Proceed to test 4
		Faulty	Rectify fault, proceed to test 5
4	Check cable continuity: - ECM pin A19 to fuse box Fuse 5, note that the engine stop switch must be in the 'RUN' position and any Alarm fitted must be disarmed	OK	Proceed to test 5
		Open circuit	Locate and rectify wiring, immobiliser or engine stop switch fault, proceed to test 5
5	Reconnect harness, clear fault code and run engine to verify fault cleared	OK	Action complete - quit test
		Fault still present	Contact Triumph service

Circuit Diagram

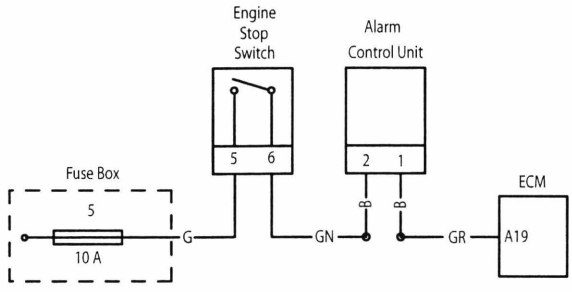

EMS Ignition Voltage Input Circuit - Rocket III Roadster

Fault Code	Possible cause	Action
P1659	EMS Ignition Voltage input circuit fault	Disconnect ECM and proceed to pinpoint test 1:

Pinpoint Tests

	Test	Result	Action
1	Check Fuse box Fuse 5 integrity	OK	Proceed to test 3
		Faulty	Proceed to test 2
2	Check cable for short circuit: - ECM pin A19 to ground	OK	Replace Fuse 2 and proceed to test 3
		Short circuit	Locate and rectify wiring fault, replace Fuse 2 and proceed to test 5
3	Check cable and terminal integrity: - ECM pin A19 - Alarm Connector pin 1 - Alarm Connector pin 2 - Right hand switch cube pin 4 - Right hand switch cube pin 5	OK	Proceed to test 4
		Faulty	Rectify fault, proceed to test 5
4	Check cable continuity: - ECM pin A19 to fuse box Fuse 5, note that the engine stop switch must be in the 'RUN' position and any alarm fitted must be disarmed	OK	Proceed to test 5
		Open circuit	Locate and rectify wiring, immobiliser or engine stop switch fault, proceed to test 5
5	Reconnect harness, clear fault code and run engine to verify fault cleared	OK	Action complete - quit test
		Fault still present	Contact Triumph service

Circuit Diagram

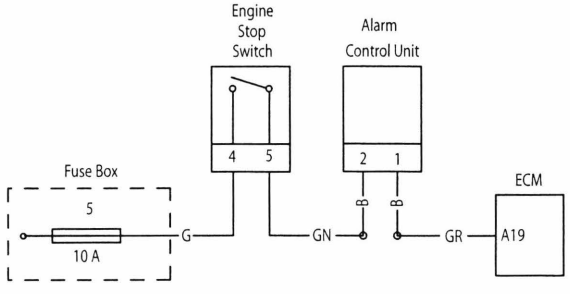

5 Volt Sensor Supply Circuit - Rocket III Touring

Fault Code	Possible cause	Action
P1696/P1697/P1698	Sensor supply circuit shorted Sensor supply circuit shorted to ground Sensor supply circuit shorted to battery positive	View & note 'sensor' data. Note ECM sensors requiring a power supply will not be active. Disconnect ECM and proceed to pinpoint test 1:

Pinpoint Tests

	Test	Result	Action
1	Check cable and terminal integrity: - ECM pin B01 - ECM pin B20	OK	Proceed to test 2
		Faulty	Rectify fault, proceed to test 5
2	Check cable for short circuit - ECM pin B01 to ECM pin B20	OK	Proceed to test 4
		Faulty	Proceed to test 3
3	Disconnect the following sensors in turn: - MAP sensor - Ambient pressure sensor - Throttle position sensor - Throttle position sensor - Exhaust control valve actuator - Fall detection sensor and retest for short circuit - ECM pin B01 to ECM pin B20	OK	Replace sensor last removed and proceed to test 5
		Faulty	Proceed to test 4
4	Check cable for short circuit: - ECM pin B01 to ground - ECM pin B20 to ground - ECM pin B01 to A06 - ECM pin B20 to A06 - ECM pin B01 to battery positive - ECM pin B20 to battery positive	OK	Proceed to test 5
		Short circuit	Locate and rectify wiring fault, proceed to test 5
5	Reconnect harness, clear fault code and use service tool to check for correct sensor outputs and 5V sensor supply Voltage level	OK	Action complete - quit test
		Fault still present	Contact Triumph service

Circuit Diagram

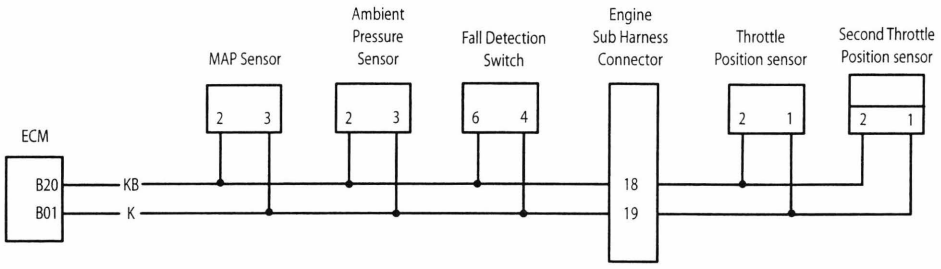

Tune Lock - Rocket III Touring

Fault Code	Possible cause	Action
P1605	ECM is locked to prevent the motorcycle from being operated	This is also identified by a fast flashing MIL indication, and a disabled engine management system. Unlock the ECM using the service tool and supplied unlock code from Triumph service.

ECM or Tune ID Incorrect - Rocket III Touring

Fault Code	Possible cause	Action
P1614	ECM or Tune is incorrect, causing the ECM to be disabled to prevent the motorcycle from being operated	This is also identified by a fast flashing MIL indication, and a disabled engine management system.

Pinpoint Tests

	Test	Result	Action
1	Check ECM part number is correct for the motorcycle	OK	Proceed to test 2
		Incorrect	Replace ECM with correct part and proceed to test 3
2	Check that the tune is correct for the motorcycle, using the diagnostic tool	OK	Proceed to test 3
		Incorrect	Update tune using service tool, proceed to test 3
3	Clear fault code, check for normal operation	OK	Action complete - quit test
		Fault still present	Contact Triumph service

Fault Finding - Non Electrical

Symptom	Possible cause(s)
Poor throttle response at low rpm	Low fuel pressure caused by filter blockage/leaks
	Low fuel pressure caused by loose fuel pipes to the fuel pump and filter
Cutting out at idle	Throttle bodies out of balance
	ISC (Idle Speed Control) actuator inoperative
	Low fuel pressure caused by loose fuel pipes to the fuel pump and filter
	Low fuel pressure
	Weak mixture caused by air leak at the throttle body/transition piece to cylinder head face
Idle speed too low/high	ISC (Idle Speed Control) actuator sticking
	Incorrect closed throttle position setting
	Mechanical fault with the throttle linkage
Diagnostic tool malfunctions during tune download procedure	Low battery Voltage
Throttle hang-up	Incorrect closed throttle position setting
Bike will start but cuts out immediately	Low fuel pressure caused by loose fuel pipes to the fuel pump and filter
	Low fuel pressure due to split fuel filter
	ISC motor stuck
Abnormally high fuel pressure	Fuel pressure regulator inoperative
Temperature gauge reads cooler than normal	Cooling system air–locked resulting in coolant temperature sensor operating in air instead of coolant

Fuel Tank - Rocket III, Classic and Roadster

Note:

- **The fuel tank may be raised without being removed completely, for access to the top of the engine, ignition coils, spark plugs etc.**

Warning

Observe the warning advice given in the General Information section on the safe handling of fuel and fuel containers.

A fire, causing personal injury and damage to property could result from spilled fuel or fuel not handled or stored correctly.

Fuel tank - raising

1. Remove the seat (see page *17-18*).
2. Disconnect the battery negative (black) lead first.
3. **Models up to VIN 241569:** Release the two fixings securing the instrument pack to the handlebar clamp cover.

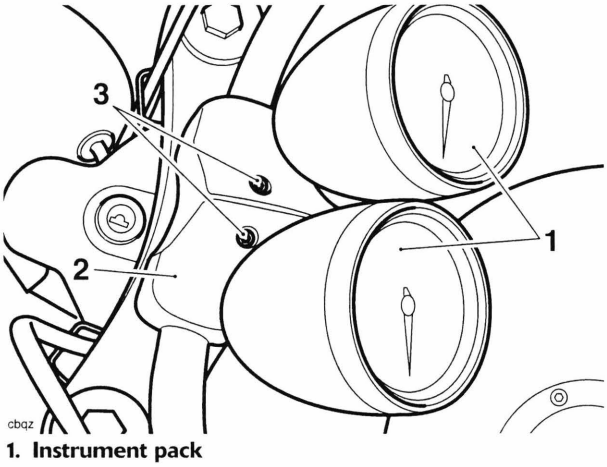

1. Instrument pack
2. Handlebar clamp cover
3. Fixings

4. Tilt the instruments forward.

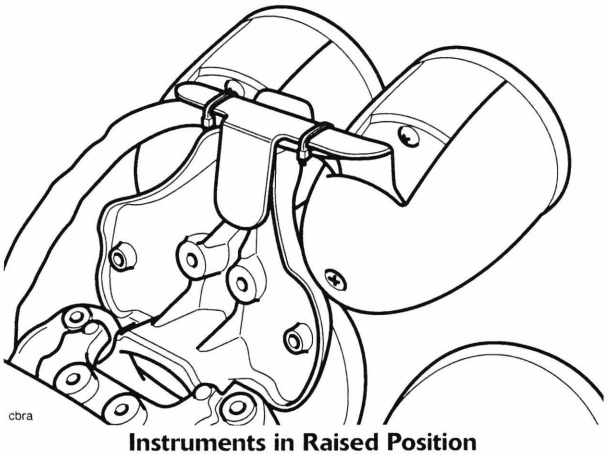

Instruments in Raised Position

5. **Models from VIN 241570:** Remove the chrome cover from the instrument bracket.

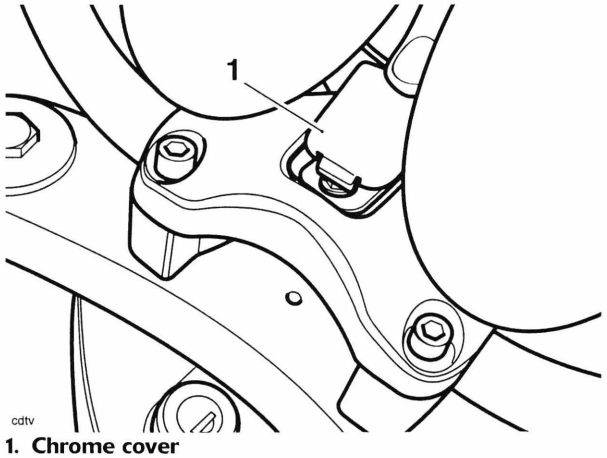

1. Chrome cover

6. Release the two fixings securing the instrument and bracket assembly to the handlebar clamp and slide the instrument assembly free. Protect the motorcycle from damage and position the instruments clear of the fuel tank.

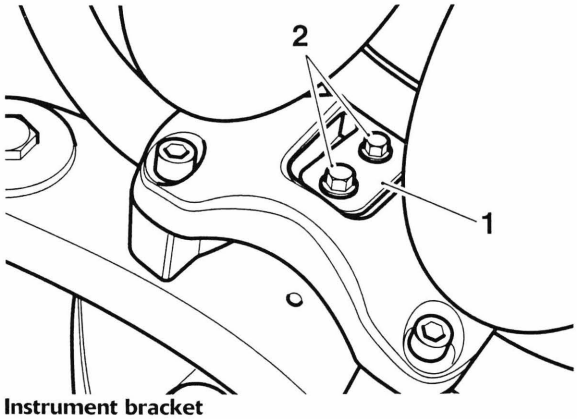

1. Instrument bracket
2. Fixings

7. **Rocket III, Classic and Roadster only:** Remove the intake cover from the left hand side of the tank as follows, release the two screws from its front and rear edges and then slide it downwards to release it from two support studs in its centre.

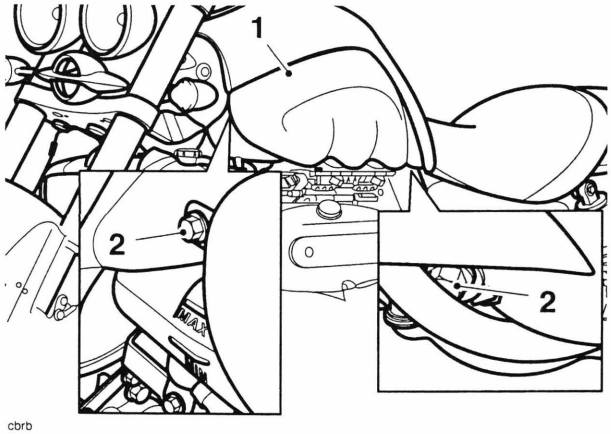

cbrb

1. Intake cover
2. Intake cover screws

8. Release the single fixing from the front of the fuel tank.

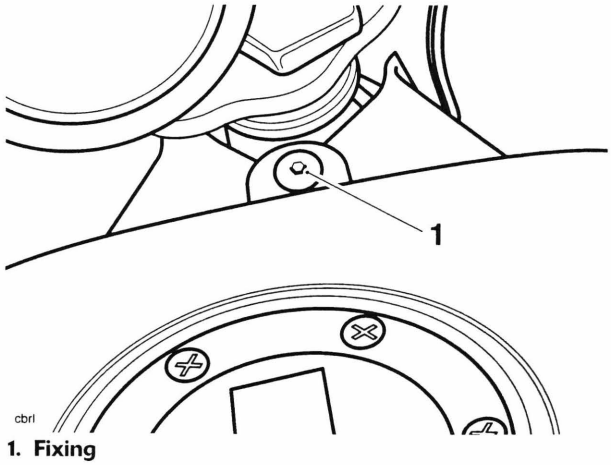

cbrl

1. Fixing

9. Pivot the fuel tank upwards at the front, support the tank while detaching the tank prop from two clips on the outside of the coil bracket.

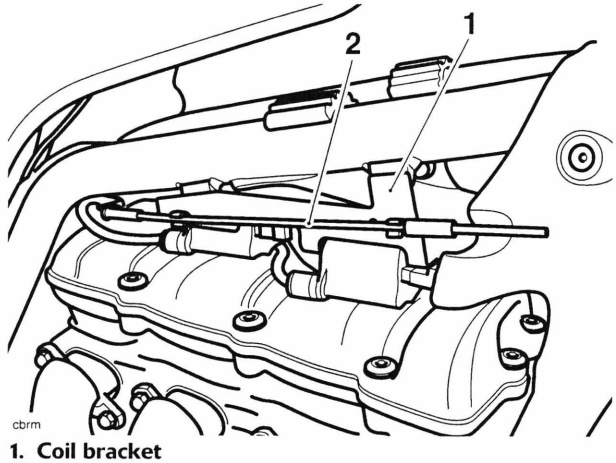

cbrm

1. Coil bracket
2. Fuel tank prop

10. Locate the plain end of the prop in the fuel tank fixing hole and the spherical end in the fixing bracket on the tank.

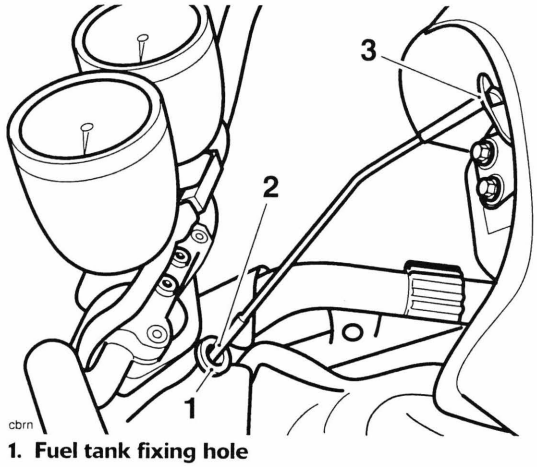

cbrn

1. Fuel tank fixing hole
2. Prop - plain end
3. Prop - ball end

Fuel tank - lowering and securing

1. Support the tank and remove the tank prop.
2. Continue to support the tank while refitting the prop to the two clips on the outside side of the coil bracket.

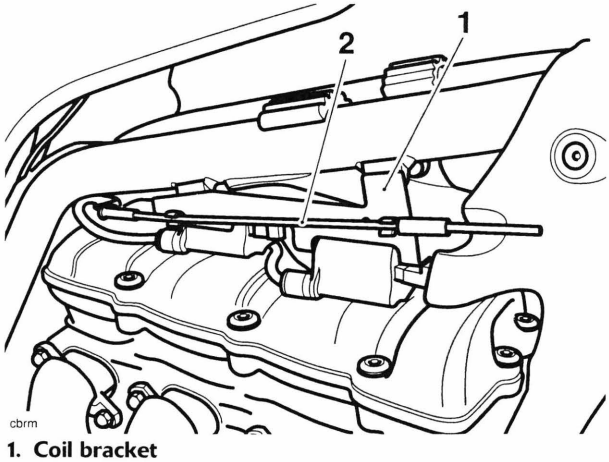

1. Coil bracket
2. Fuel tank prop

3. Lower the tank into position and secure with the forward fixing. Tighten the fixing to **9 Nm**.
4. Refit the intake cover as follows: Align the cover to the centre studs and ease it into place. Fit and tighten the two screws to **9 Nm**.
5. **Models up to VIN 241569:** Pivot the instruments into place. Fit the two screws and tighten to **3 Nm**.
6. **Models from VIN 241570:** Position the instrument and bracket assembly to the handlebar clamp and secure with the two screws. Tighten the screws to **9 Nm**.
7. Fit the chrome cover to the instrument bracket.
8. **All models:** Reconnect the battery, positive (red) lead first.
9. Refit the seat (see page *17-18*).

Fuel tank - removal - Rocket III, Classic and Roadster

1. Raise and prop the tank (see page *11-121*).
2. Make a note of, or mark the position of the two breather hoses at the front left side of the tank, before disconnecting both hoses.

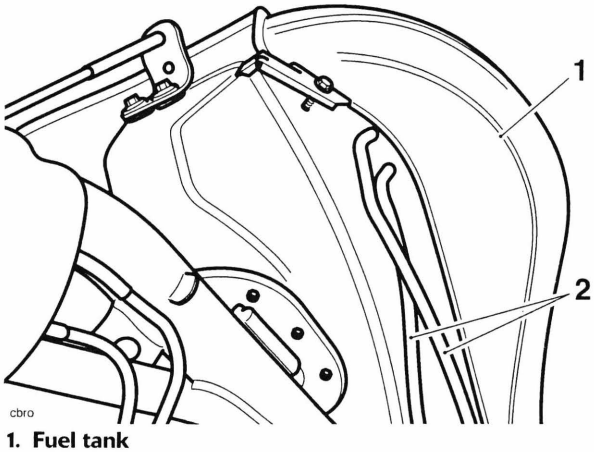

1. Fuel tank
2. Breather hoses

Warning

The fuel hose will contain fuel under pressure. When releasing the fuel hose union, wear eye protection and protective clothing and ensure that the pressurised fuel is not exposed to naked flames, light bulbs, etc. A fire, causing personal injury and damage to property, may result from fuel exposure to naked flames, light bulbs and any other source of ignition.

Note:

- **The fuel supply system is fitted with a check valve to prevent fuel flow from the tank when the hose is disconnected. It is not necessary to plug the connection.**

3. Disconnect the fuel hose from the fuel pump plate in the base of the tank and discard the sealing washers. Drain the pipe contents into a suitable fuel container.

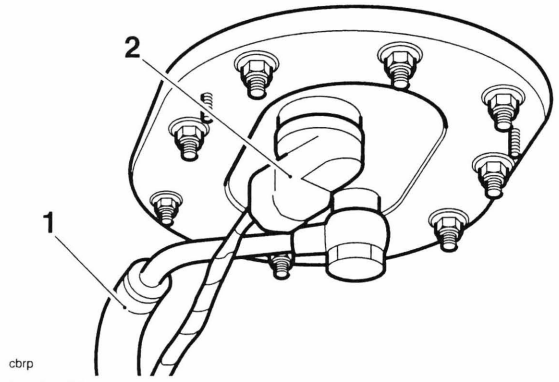

1. Fuel hose
2. Electrical connection

4. Disconnect the electrical connection from the fuel pump plate.
5. Support the fuel tank while removing the rear mounting bolt.

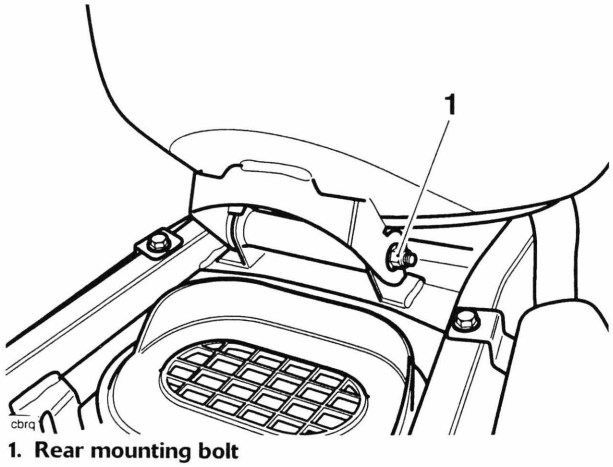

1. Rear mounting bolt

6. Raise the tank from the frame and have a colleague collect the tank prop.

Note:

- **Store the tank prop in a convenient place, ready for when the tank is refitted.**

7. Place the fuel tank in a safe place.

Fuel tank - installation - Rocket III, Classic and Roadster

1. Position the fuel tank to the frame and install the rear mounting bolt.
2. Pivot the front of the tank upwards at the front and refit the tank prop to the frame and tank.
3. Tighten the rear fuel tank mounting bolt to **8 Nm**.
4. Incorporating new washers, refit the fuel hose and tighten the union to **15 Nm**.
5. Reconnect the electrical supply to the fuel pump plate.
6. Connect the breather hoses as noted/marked prior to removal.
7. Lower and secure the fuel tank (see page *11-123*).

Fuel Tank - Rocket III Touring

Note:

- **The fuel tank may be raised without being removed completely, for access to the top of the engine, ignition coils, spark plugs etc.**

Warning

Observe the warning advice given in the General Information section on the safe handling of fuel and fuel containers.

A fire, causing personal injury and damage to property could result from spilled fuel or fuel not handled or stored correctly.

Fuel tank - raising

1. Remove the seat (see page *17-19*).
2. Disconnect the battery negative (black) lead first.
3. Release the three fixings securing the instrument assembly to the fuel tank.

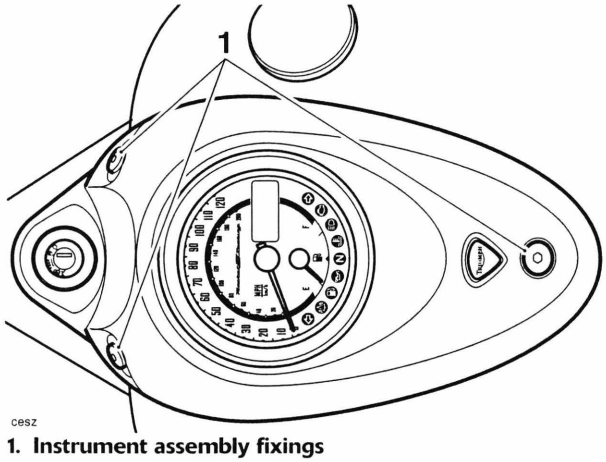

cesz

1. Instrument assembly fixings

4. Lift the instrument assembly to access its underside.
5. Slide the protective cover down the harness and disconnect the electrical connector. Place the instrument assembly to one side.

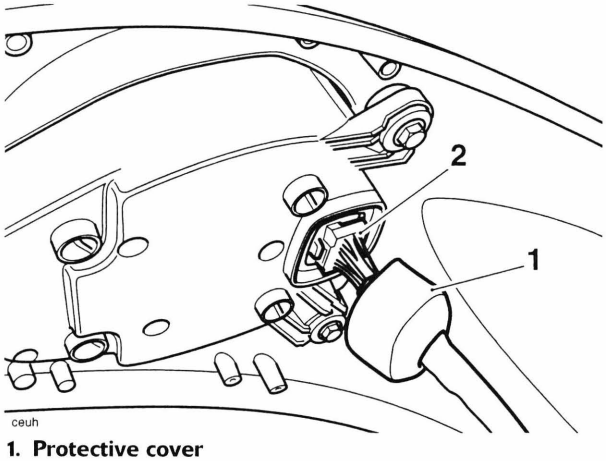

ceuh

1. Protective cover
2. Electrical connector

6. Remove the intake cover from the left hand side of the fuel tank as follows; release the screw from its front edge and then slide it forwards to release it from the centre and rear supports.

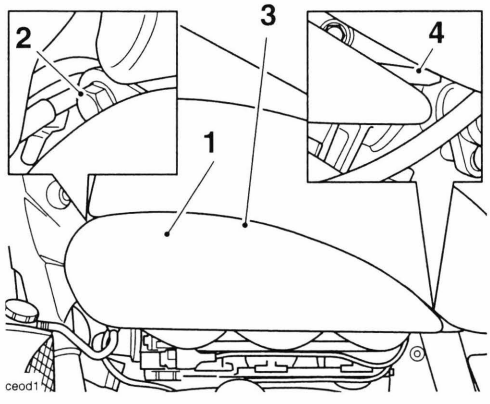

ceod1

1. Intake cover
2. Intake cover screw
3. Intake cover centre support
4. Intake cover rear support

7. Release the two fixings from the front of the fuel tank.

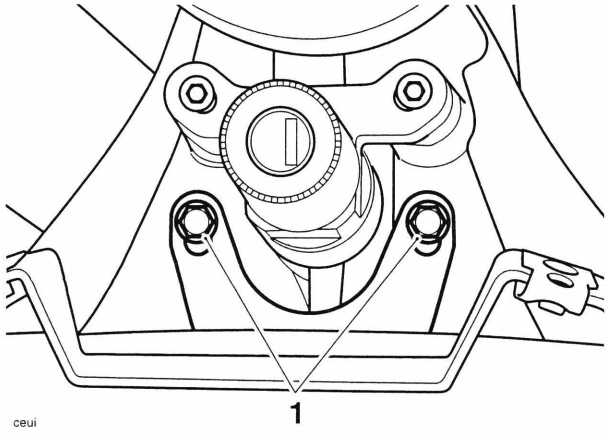

1. Fixings

8. Pivot the fuel tank upwards at the front and support the tank while detaching the tank prop from two clips on the outside of the coil bracket.

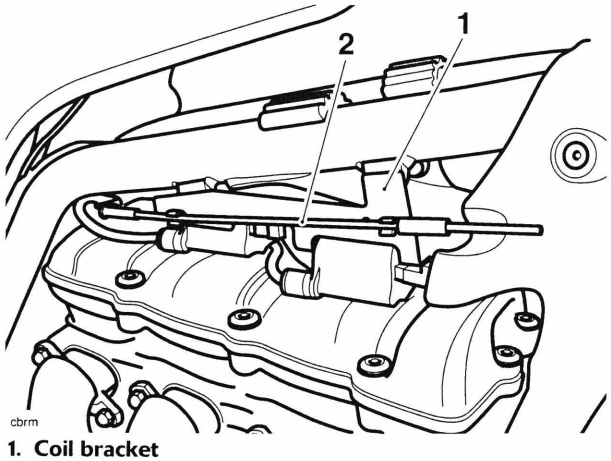

1. Coil bracket
2. Fuel tank prop

9. Locate the plain end of the prop in a fuel tank fixing hole and the spherical end in the fixing bracket on the tank.

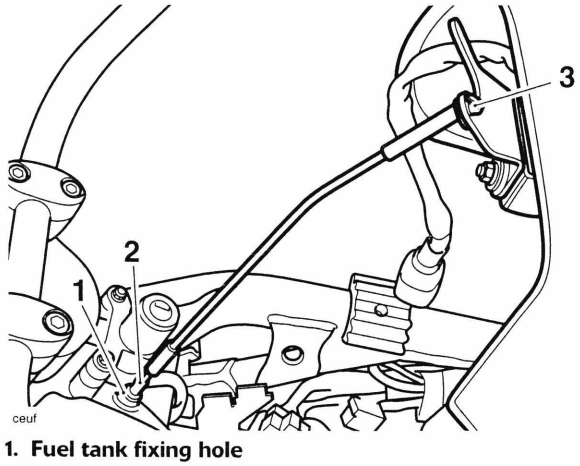

1. Fuel tank fixing hole
2. Prop - plain end
3. Prop - ball end

Fuel tank - lowering and securing

1. Support the tank and remove the tank prop.
2. Continue to support the tank while refitting the prop to the two clips on the outside side of the coil bracket.

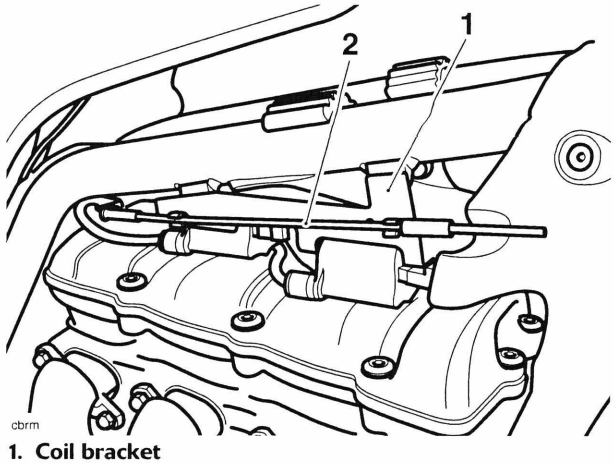

1. Coil bracket
2. Fuel tank prop

3. Lower the tank into position and secure with the forward two fixings. Tighten the fixings to **9 Nm**.
4. Refit the intake cover as follows, align the cover to the centre and rear supports and ease it into place. Fit and tighten the screw to **9 Nm**.
5. Ensure the electrical connector gasket is in place and connect the electrical connector to the instrument assembly. Slide the protective cover over the connector.
6. Refit the instrument assembly and tighten the fixings to **7 Nm**.
7. Reconnect the battery, positive (red) lead first.
8. Refit the seat (see page *17-19*).

Fuel tank - removal - Rocket III Touring

1. Raise and prop the tank (see page *11-125*).

Note:

- **Make a note of, or mark the position of the breather hose and the wiring harness on the underside side of the tank.**

2. Disconnect the breather hose and the electrical connectors to the fuel pump and the fuel level sensor.

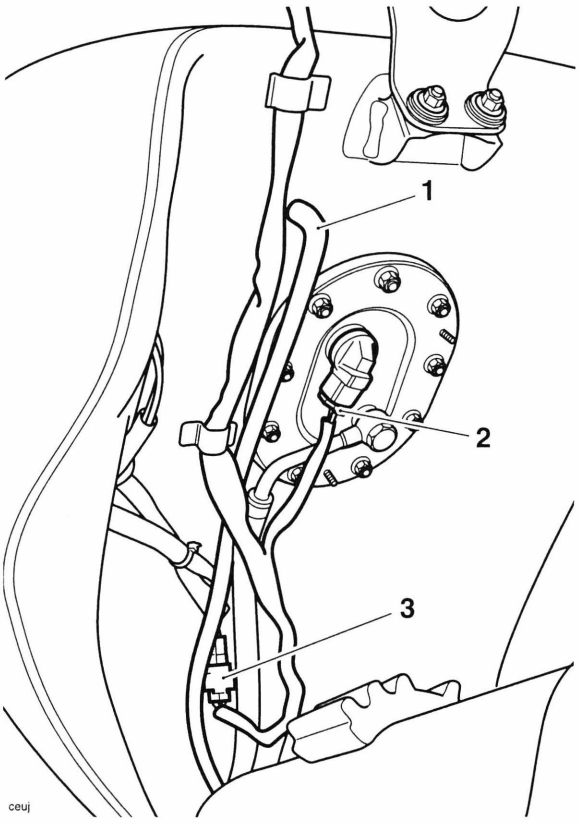

1. Breather hose
2. Fuel pump electrical connector
3. Fuel level sensor electrical connector

3. Detach the breather hose and the harness from the clips beneath the fuel tank.

Warning

The fuel hose will contain fuel under pressure. When releasing the fuel hose union, wear eye protection and protective clothing and ensure that the pressurised fuel is not exposed to naked flames, light bulbs, etc. A fire, causing personal injury and damage to property, may result from fuel exposure to naked flames, light bulbs and any other source of ignition.

Note:

- **The fuel supply system is fitted with a check valve to prevent fuel flow from the tank when the hose is disconnected. It is not necessary to plug the connection.**

4. Disconnect the fuel hose from the fuel pump plate in the base of the tank and discard the sealing washers. Drain the hose contents into a suitable fuel container.

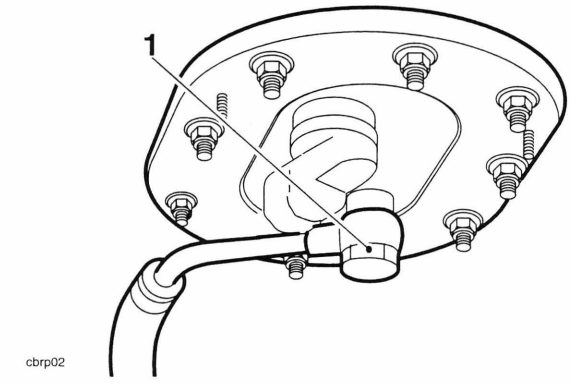

1. Fuel hose

5. Support the fuel tank while removing the rear mounting bolt.

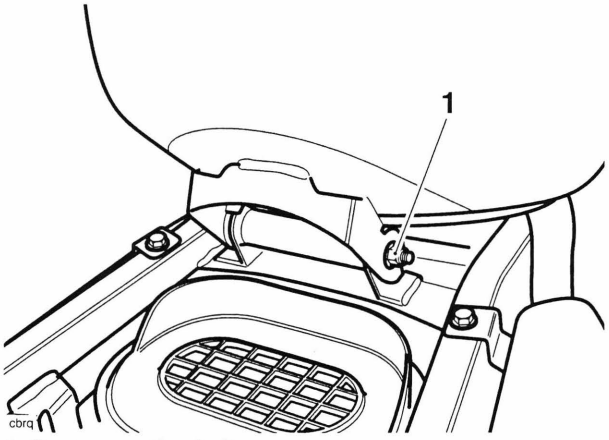

1. Rear mounting bolt

6. Raise the tank from the frame and have a colleague collect the tank prop.

Note:

- **Store the tank prop in a convenient place, ready for when the tank is refitted.**

7. Place the fuel tank in a safe place.

Fuel tank - installation - Rocket III Touring

1. Position the fuel tank to the frame and install the rear mounting bolt.
2. Pivot the front of the tank upwards at the front and refit the tank prop to the frame and tank.
3. Tighten the rear fuel tank mounting bolt to **8 Nm**.
4. Incorporating new washers, refit the fuel hose and tighten the union to **15 Nm**.
5. Attach and connect the breather pipe and harnesses to the fuel tank as noted/marked prior to removal.
6. Lower and secure the fuel tank (see page *11-126*).

Fuel Pressure Checking

Warning

Observe the fuel handling precautions given in the General Information section.

Fuel pressure is checked using service tool T3880047.

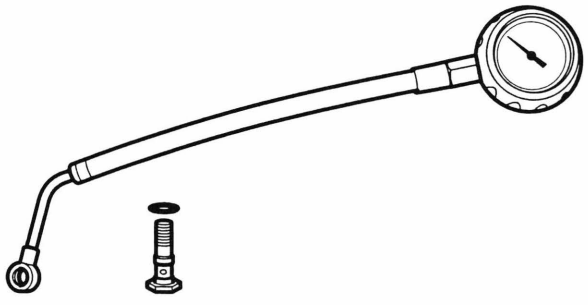

cdit

Tool T3880047

1. Raise and prop the tank (see page *11-121* for Rocket III and Classic and Roadster, see page *11-125* for Rocket III Touring).

Note:

- **After removal, the sealing washers will be used to seal the fuel pressure gauge union to the fuel pump plate and fuel pipe. After the fuel pressure check has been carried out, the sealing washers should be discarded.**

2. Disconnect the fuel hose from the fuel pump plate in the base of the tank and remove the sealing washers from the banjo bolt. Do not discard the washers at this stage. Drain the hose contents into a suitable fuel container.

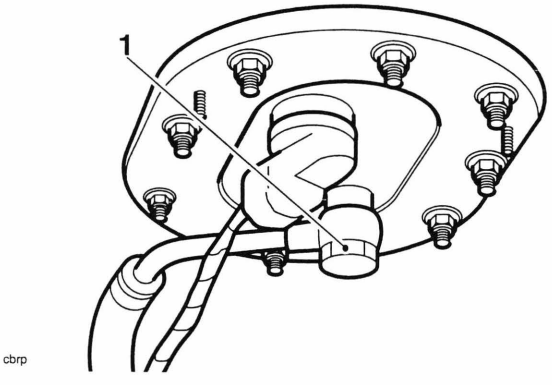

cbrp

1. Fuel hose

3. Using the double-length banjo bolt and washer supplied with the fuel pressure gauge, and using the two washers previously removed, connect the tool's union between the fuel pump plate outlet and fuel hose as shown in the illustration below.
4. Tighten the union to **15 Nm**.

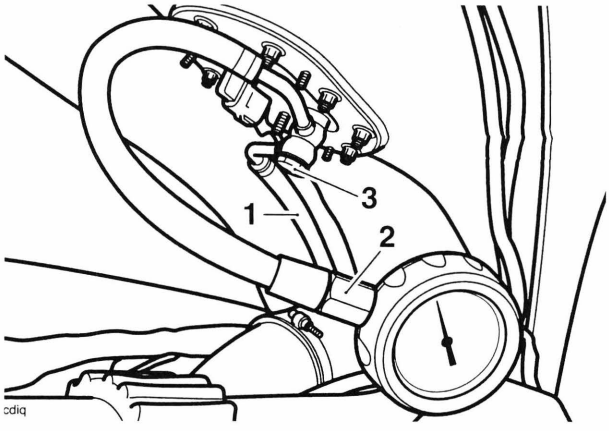

cdiq

1. Fuel hose
2. Tool T3880047
3. Double length banjo bolt

Note:

- **The engine can be run with the fuel tank in the raised position.**

Caution

Care must be taken when fitting the instrument assembly, to ensure the instrument panel, fuel tank and handlebars do not become scratched. Protect the surfaces with a suitable cloth or tape to prevent scratching.

5. Support the instrument assembly and re-connect the electrical connector
6. Start the engine and observe the fuel pressure reading on the gauge.

Note:

- **The fuel pressure should be 3.0 bar ± 0.5 bar nominally.**

7. When fuel pressure checking is complete, disconnect the fuel pressure gauge and discard the two washers removed previously. Retain the washer supplied with the tool for reuse.
8. Disconnect the instrument assembly electrical connector.
9. Reconnect the fuel hose incorporating new sealing washers and refit the fuel tank (see page *11-124* for Rocket III and Classic, see page *11-127* for Rocket III Touring).

Fuel Pump, Filter and Pressure Regulator - Rocket III, Classic and Roadster

Removal

1. Remove the fuel tank (see page *11-123*).

Warning

Observe the warning advice given in the General Information section on the safe handling of fuel and fuel containers.

A fire, causing personal injury and damage to property could result from spilled fuel or fuel not handled or stored correctly.

Warning

Never drain fuel from the tank using non-approved, non-professional standard fuel handling equipment. A fire causing destruction of property and injury to persons may result from use of non-approved fuel handling equipment.

2. Using proprietary professional automotive workshop equipment approved for fuel handling, drain all fuel from the fuel tank.
3. Invert the fuel tank and place on a protective surface to prevent paint damage.
4. Release the ring of nuts securing the fuel pump mounting plate to the tank.

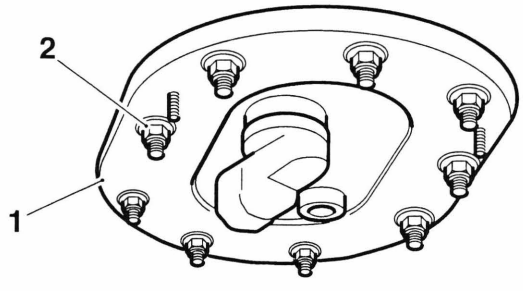

cbrs

1. Fuel pump mounting plate
2. Nuts

5. Separate the fuel pump/filter/pressure regulator assembly from the fuel tank. Discard the fuel pump plate seal.

Caution

Ensure that the fuel level sensor's float arm is not damaged during removal of the fuel pump mounting plate. A damaged float arm will result in an incorrectly operating low fuel warning light.

Note:

- **To remove the pressure regulator, filter and fuel pump, components must be removed in sequence, as follows below/over.**

6. Release the screw securing the pressure regulator to the mounting bar. Discard the screw after removal.

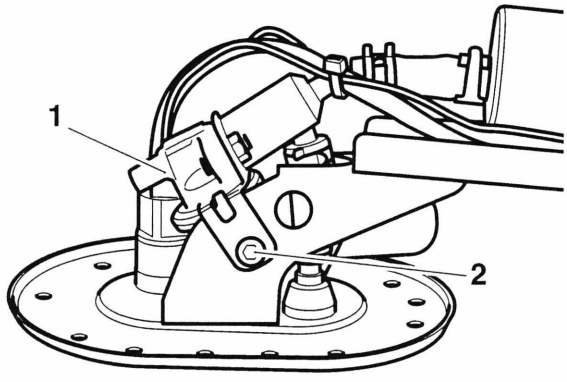

cbpa

1. Pressure regulator
2. Screw

Note:

- **Unless it cannot be avoided, do not cut the tie securing the internal wiring to the fuel pressure regulator. Instead, release the two wiring connectors from the fuel pump plate (note or mark their positions before removal).**

7. To release the pressure regulator, release the hose clips from the fuel pump plate and filter then gently ease the pressure regulator, link pipe and hoses upwards. Place the pressure regulator aside.

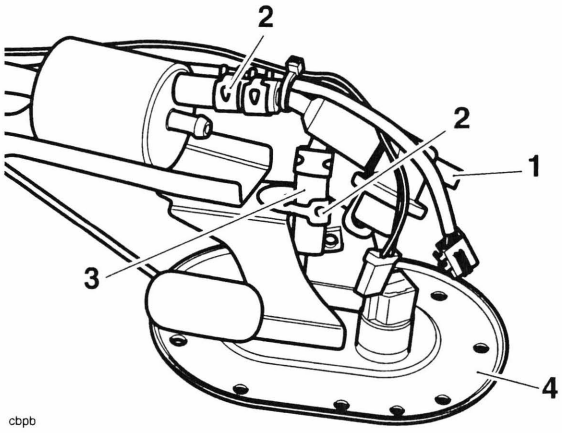

cbpb

1. Pressure regulator
2. Hose clips
3. Link pipe
4. Fuel pump mounting plate

Note:

- **Prior to removing the filter, note the direction of the arrow on the side of the filter. The arrow should point away from the fuel pump, towards the pressure regulator.**

8. To release the filter, release the hose clip and gently ease the filter from the inlet hose.

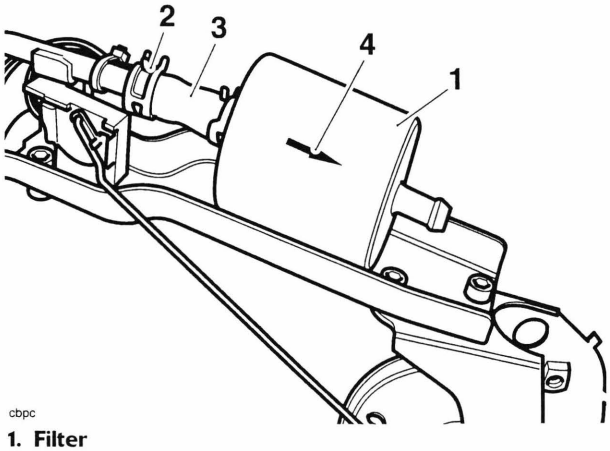

cbpc

1. Filter
2. Clip
3. Inlet hose
4. Filter arrow

9. Release the screw securing the fuel pipe bracket and fuel level sensor to the mounting bar. Discard the screw after removal

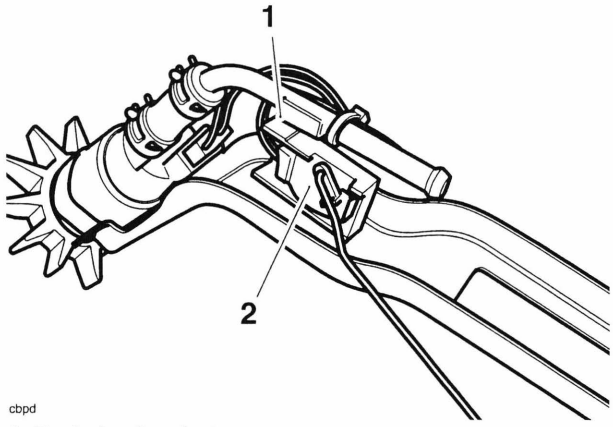

cbpd

1. Fuel pipe bracket
2. Fuel level sensor

10. Disconnect the electrical connection from the fuel pump.

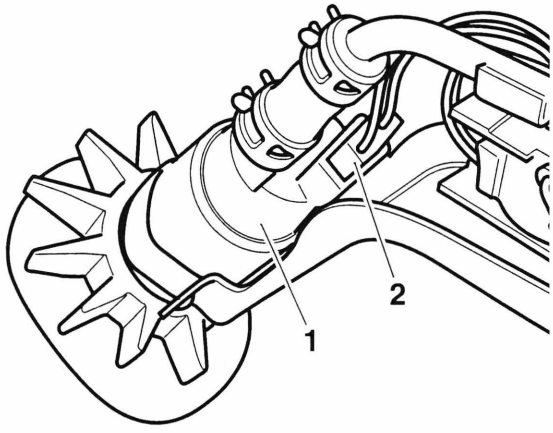

cbpe

1. Fuel pump
2. Electrical connection

11. Release the clip securing the remaining fuel hose to the fuel pump, then ease the fuel pipe away from the filter.

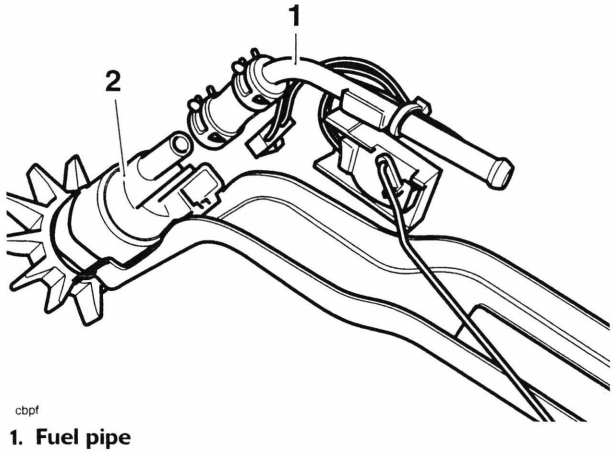

cbpf

1. Fuel pipe
2. Fuel pump

12. Release the screw securing the fuel pump clamp to its mounting bar. Discard the screw after removal.

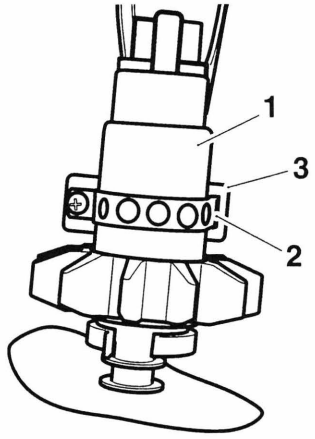

cbpg

1. Fuel pump
2. Fuel pump clamp
3. Mounting bar

13. The fuel pump may now be removed.

Inspection

1. Inspect all hoses for cracks, splits, fraying and other damage. Replace as necessary.
2. Check all hose clips for cracks and signs of distortion. Replace as necessary.

Assembly

1. Position the fuel pump to the mounting bar, ensuring the feet of the rubber isolator engage correctly in the fork.

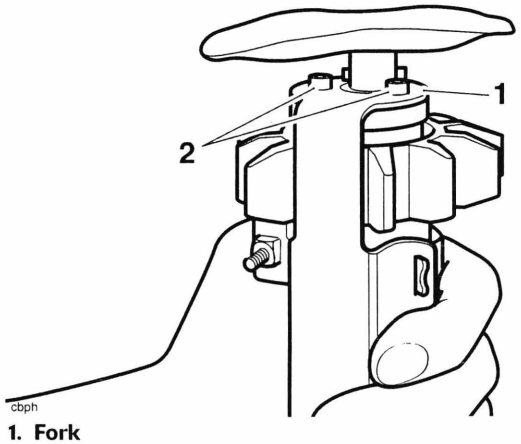

cbph

1. Fork
2. Isolator feet

2. Refit the fuel pump clamp and tighten a new screw to **3 Nm**.

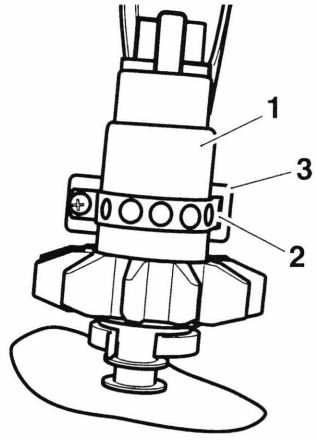

cbpg

1. Fuel pump
2. Fuel pump clamp
3. Mounting bar

3. Locate the fuel pipe and hose to the fuel pump outlet.
4. Making sure that the anti-rotation tab is located in its slot, align the fuel pipe and fuel level sender to the screw hole in the mounting bar. Fit a new screw and tighten it to **10 Nm**.
5. Position the hose clip on the fuel pipe to the outlet spigot on the fuel pump.
6. Refit/replace the filter (arrow pointing away from the fuel pump) by engaging it with the hose on the fuel pipe.

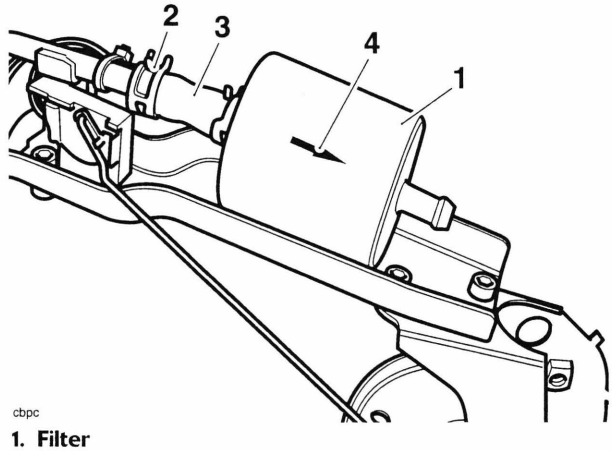

cbpc

1. Filter
2. Clip
3. Inlet hose
4. Filter arrow

7. Position the hose clip to the filter inlet.
8. Refit the pressure regulator and hoses to the filter and fuel pump plate. Engage the hoses with the filter outlet and fuel pump plate.
9. Secure the pressure regulator to the mounting bar with a new screw, tightening it to **10 Nm**.

10. Position the hose clips to the filter outlet and fuel pump plate.
11. Reconnect the two electrical connections to the fuel pump plate, in the positions noted/marked prior to removal.

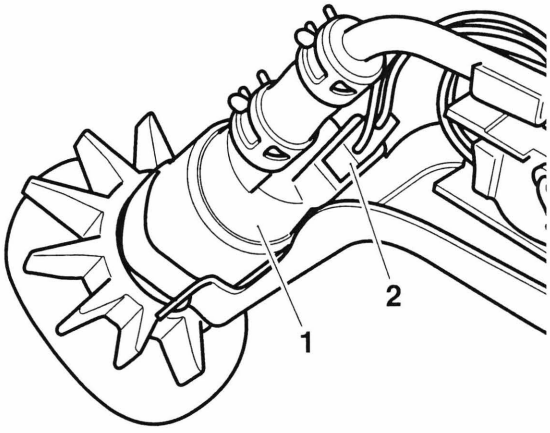

cbpe

1. Fuel pump
2. Electrical connection

12. Check that the fuel level sender arm moves freely along its full range of travel, and comes to rest on the fuel pump plate. Rectify as necessary.

Installation

1. Position a new O-ring seal to the fuel tank opening.
2. Refit the fuel pump assembly to the tank. Fit and tighten the nuts to **5 Nm** working on diagonally opposite nuts to spread the clamping load evenly.
3. Refit the fuel tank (see page *11-124*).

Fuel Level Sensor - Rocket III, Classic and Roadster

Removal

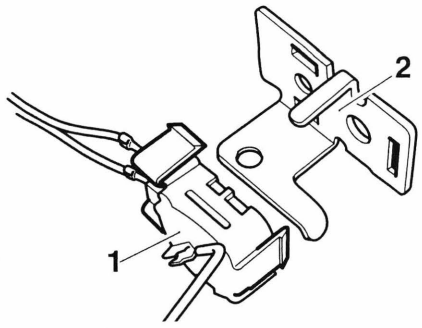

1. Fuel level sender
2. Bracket

Note:

- **A spares kit is required for models up to VIN 334807, refer to the parts catalogue.**

1. Remove the fuel pump plate assembly (see page *11-129*).
2. After noting their positions, cut and discard the two cable ties securing the fuel pump and fuel level sender wiring to the fuel pump plate.
3. Disconnect the fuel level sender multiplug from the connector block in the fuel pump plate.
4. Remove the fixing securing the fuel level sender to the fuel pump bracket and remove the fuel level sender.

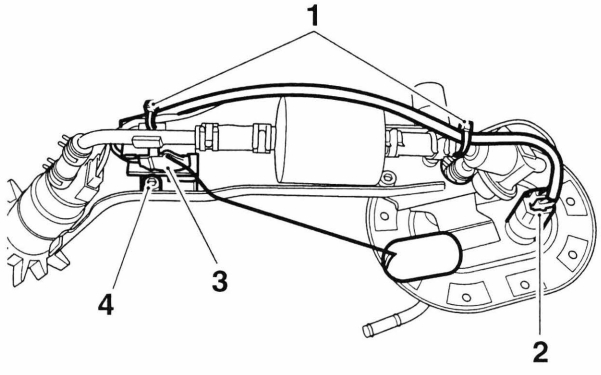

1. Cable ties
2. Fuel level sender multiplug
3. Fuel level sender
4. Fixing

Installation

5. Position the fuel level sender to the bracket and snap the three clips into position, as shown below.

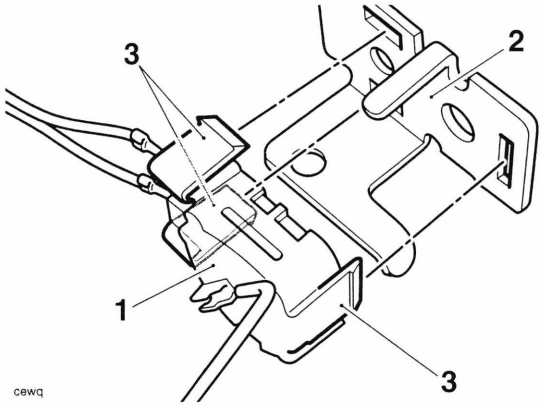

1. Fuel level sender
2. Bracket
3. Clips

6. Carefully position the fuel level sender to the fuel pump bracket, ensuring the fuel level sender float arm is not bent during installation. Install the new fixing, supplied in the kit, and tighten to **10 Nm**.

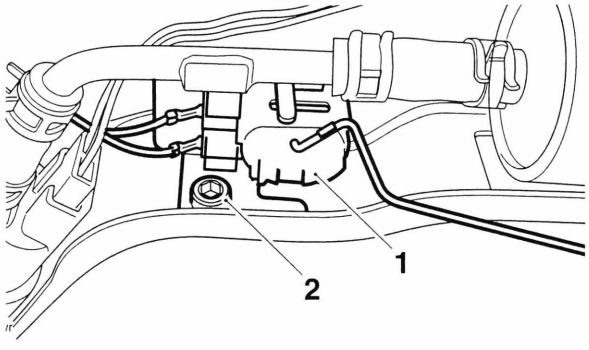

1. Fuel level sender
2. Fixing

7. Operate the fuel level sender through its full range of movement and ensure the fuel level sender float arm is not restricted. If necessary adjust the position of the fuel hose and clip as shown below.

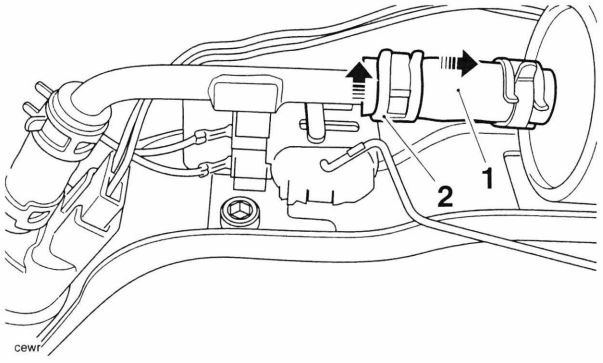

1. Hose
2. Clip

8. Route the fuel level sender harness alongside the fuel pump harness and connect the multiplug to the connector block in the fuel pump plate.
9. Secure the two harnesses to the fuel pump plate, with two new cable ties, in the position noted during removal.
10. Install the fuel pump plate assembly (see page *11-129*), ensuring the float arm is not bent during installation.

Fuel Pump, Filter and Pressure Regulator - Rocket III Touring

Removal

1. Remove the fuel tank (see page *11-126*).

Warning

Observe the warning advice given in the General Information section on the safe handling of fuel and fuel containers.

A fire, causing personal injury and damage to property could result from spilled fuel or fuel not handled or stored correctly.

Warning

Never drain fuel from the tank using non-approved, non-professional standard fuel handling equipment. A fire causing destruction of property and injury to persons may result from use of non-approved fuel handling equipment.

2. Using proprietary professional automotive workshop equipment approved for fuel handling, drain all fuel from the fuel tank.
3. Invert the fuel tank and place on a protective surface to prevent paint damage.
4. Release the ring of nuts securing the fuel pump mounting plate to the tank.

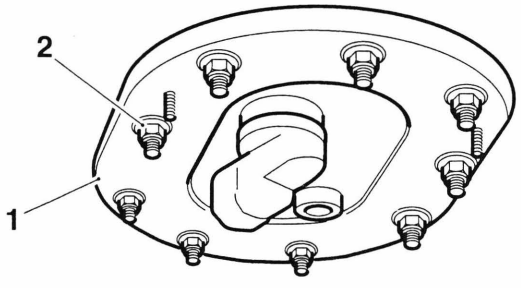

cbrs

1. Fuel pump mounting plate
2. Nuts

5. Separate the fuel pump/filter/pressure regulator assembly from the fuel tank. Discard the fuel pump plate seal.

Note:

- **To remove the pressure regulator, filter and fuel pump, components must be removed in sequence, as follows below/over.**

6. Detach the baffle hose from the fuel pressure regulator and mounting bar.

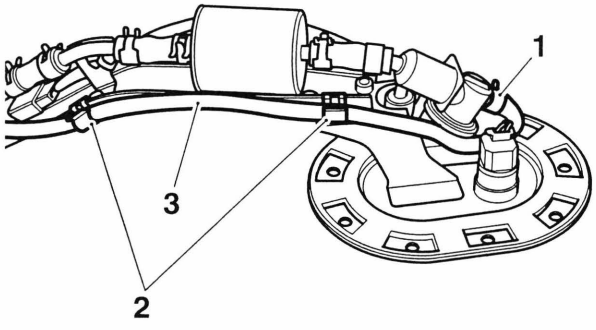

cevl

1. Hose clip
2. Clips
3. Baffle hose

7. Release the filter retaining strap and remove the filter from the fuel pump baffle.

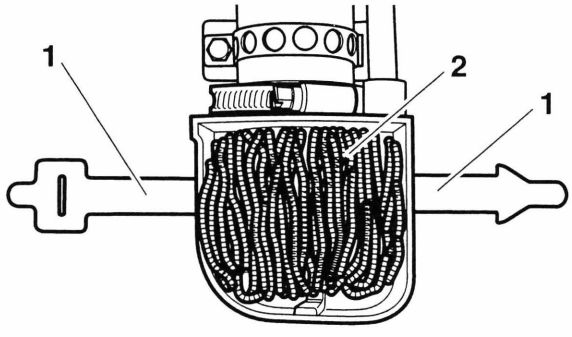

cevn

1. Filter retaining strap
2. Filter

Note:

- **Make a note of the position of the fuel pump baffle in order to put it in the same position on assembly.**

8. Release the clamp and remove the fuel pump baffle.

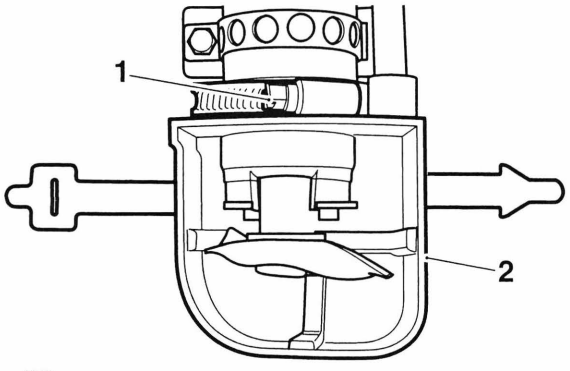

cevm

1. Clamp
2. Baffle

9. Release the screw securing the pressure regulator to the mounting bar. Discard the screw after removal.

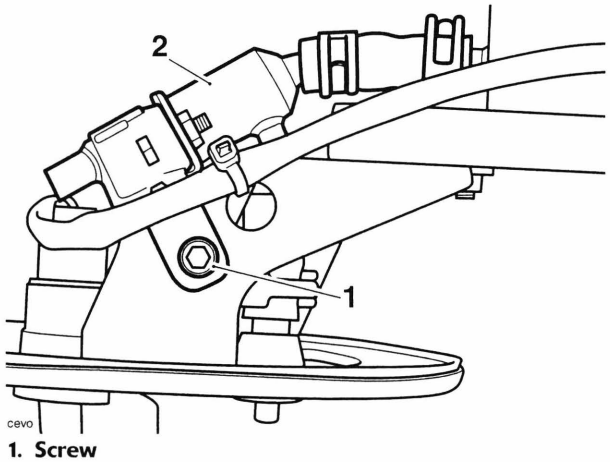

cevo

1. Screw
2. Pressure regulator

10. To release the pressure regulator, release the hose clips from the fuel pump plate and filter then gently ease the pressure regulator, link pipe and hoses upwards. Place the pressure regulator aside.

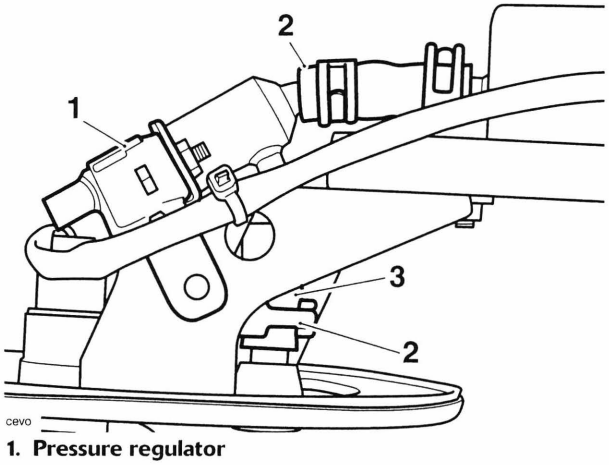

cevo

1. Pressure regulator
2. Hose clips
3. Link pipe

Note:

- **Prior to removing the filter, note the direction of the arrow on the side of the filter. The arrow should point away from the fuel pump, towards the pressure regulator.**

11. If fitted remove the cable tie.
12. To release the filter, release the hose clip and gently ease the filter from the inlet hose.

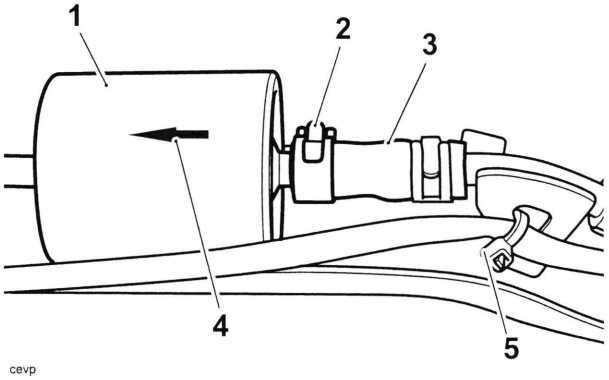

cevp

1. Filter
2. Hose clip
3. Inlet hose
4. Filter arrow
5. Cable tie

13. Release the screws securing the fuel pipe bracket and fuel pump bracket to the mounting bar. Discard the screws after removal.

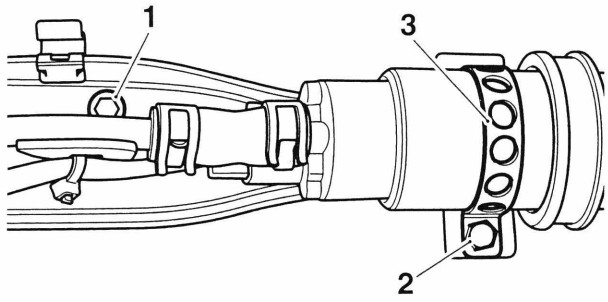

cevq

1. Fuel pipe bracket screw
2. Fuel pump bracket screw
3. Fuel pump bracket

14. Remove the fuel pump from the mounting bar.

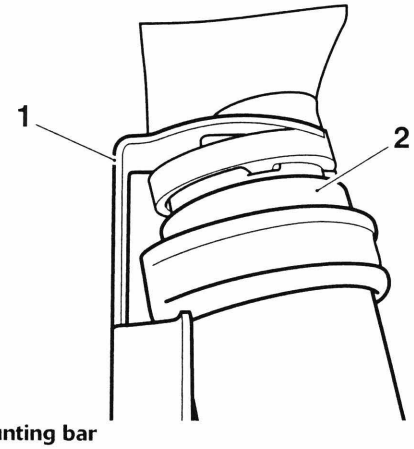

cevu

1. Mounting bar
2. Fuel pump

15. Disconnect the electrical connection and the fuel hose from the fuel pump.

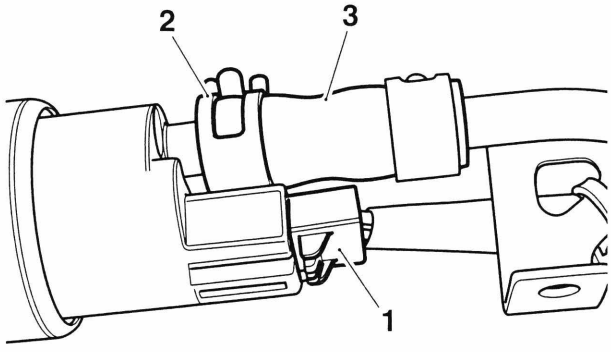

cevs

1. Electrical connection
2. Hose clip
3. Fuel hose

Inspection

1. Inspect all hoses for cracks, splits, fraying and other damage. Replace as necessary.
2. Check all hose clips for cracks and signs of distortion. Replace as necessary.

Assembly

1. Locate the fuel pipe and hose to the fuel pump outlet.
2. Connect the fuel pump electrical connector.
3. Position the fuel pump to the mounting bar, ensuring the feet of the rubber isolator engage correctly in the fork.

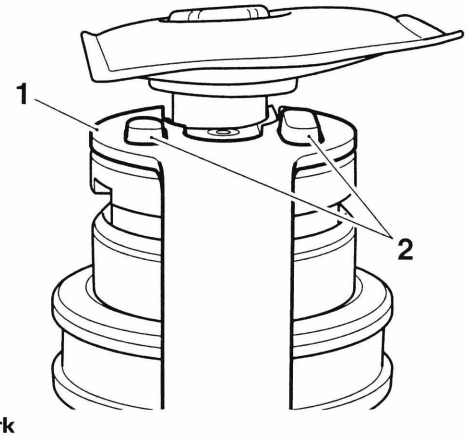

cevv

1. Fork
2. Isolator feet

4. Ensuring that the flat edge of the fuel pump baffle grommet is aligned with the mounting bar, refit the fuel pump clamp and tighten a new screw to **3 Nm**.

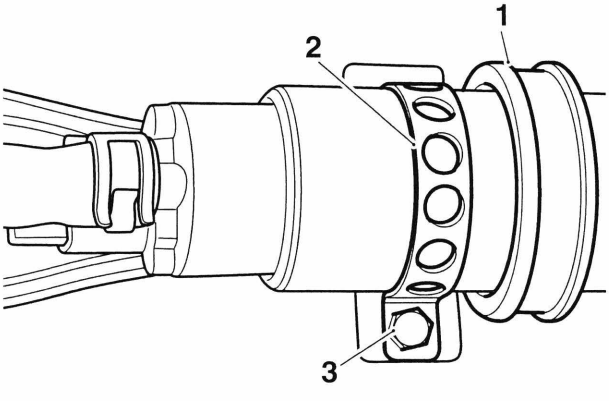

cevr

1. Baffle grommet
2. Fuel pump clamp
3. Screw

5. Align the fuel pipe to the screw hole in the mounting bar. Fit a new screw and tighten it to **10 Nm**.

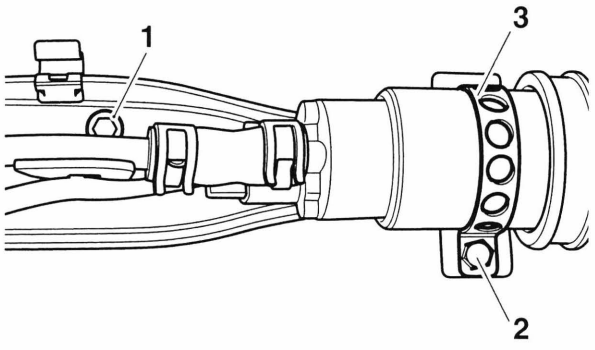

cevq1

1. Fuel pipe bracket screw
2. Fuel pump bracket screw
3. Fuel pump bracket

6. Position the hose clip on the fuel pipe to the outlet spigot on the fuel pump.
7. Position the fly lead for the fuel pump as illustrated below.

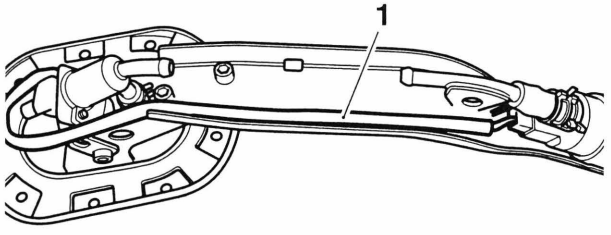

1. Fly lead

8. Refit/replace the filter (arrow pointing away from the fuel pump) by engaging it with the hose on the fuel pipe.

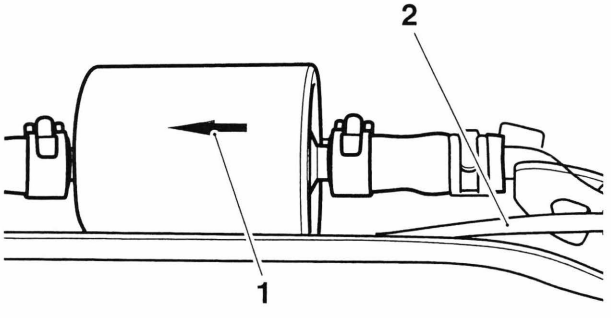

1. Filter arrow
2. Fly lead

9. Fit the cable tie through the holes in the mounting bracket and around the fuel filter.

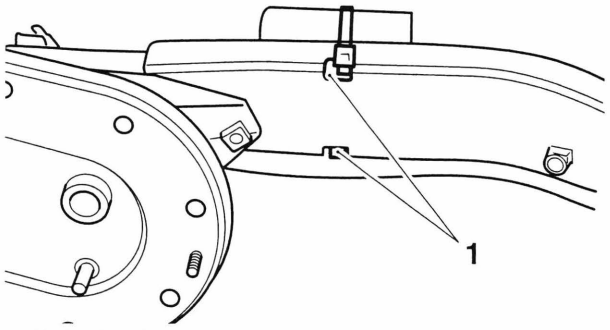

1. Holes for the cable tie

10. Secure the cable tie with the buckle positioned within the 20 mm band shown below.

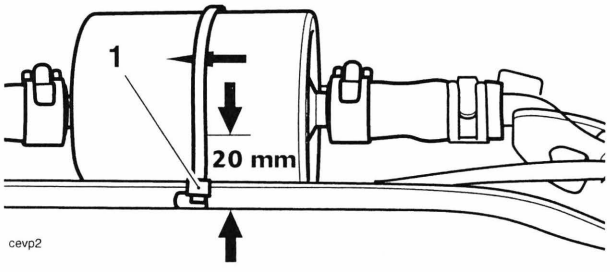

cevp2

1. Cable tie buckle

11. Refit the pressure regulator and hoses to the filter and fuel pump plate. Engage the hoses with the filter outlet and fuel pump plate.
12. Secure the pressure regulator to the mounting bar with a new screw, tightening it to **10 Nm**.

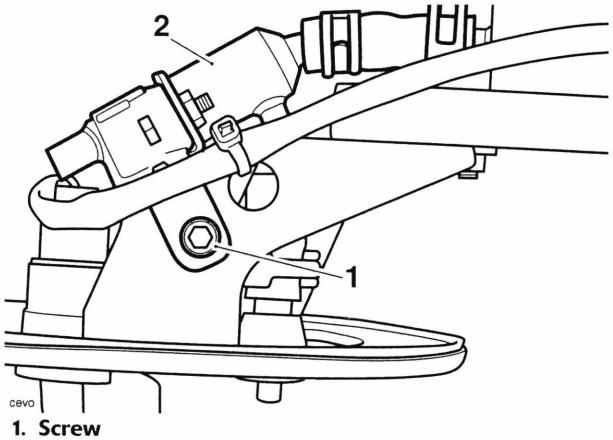

cevo

1. Screw
2. Pressure regulator

13. Position the hose clips to the filter outlet and fuel pump plate.

14. Refit the fuel pump baffle to the noted position on removal and tighten the clamp to **3 Nm**.

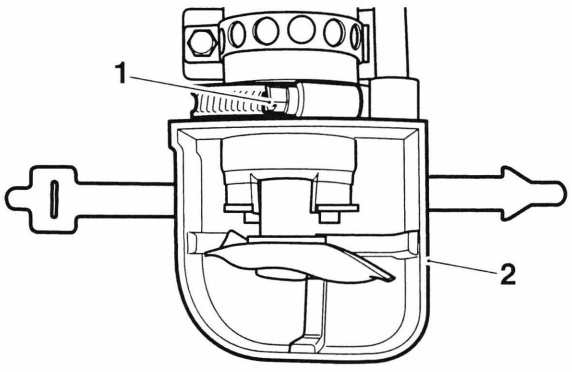

cevm

1. Clamp
2. Baffle

15. Refit the filter to the fuel pump baffle and secure the filter retaining strap.

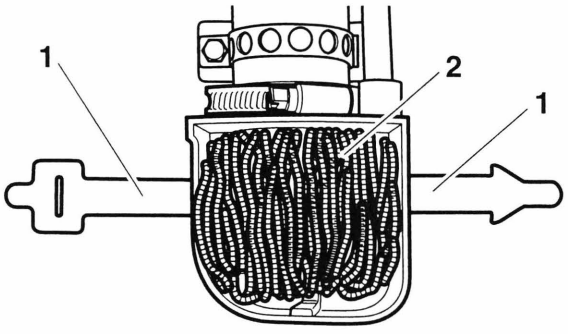

cevn

1. Filter retaining strap
2. Filter

16. Refit the baffle hose to the fuel pressure regulator and mounting bar.

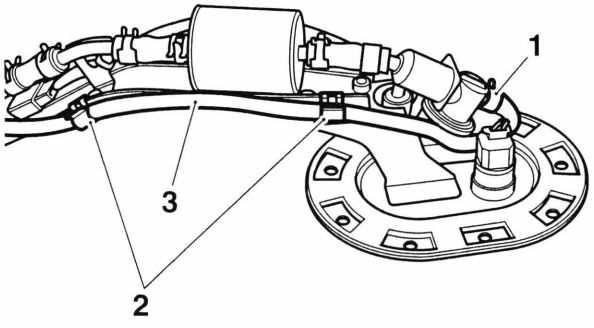

cevl

1. Hose clip
2. Clips
3. Baffle hose

Installation

1. Position a new O-ring seal to the fuel tank opening.
2. Refit the fuel pump assembly to the tank. Fit and tighten the nuts to **5 Nm** working on diagonally opposite nuts to spread the clamping load evenly.
3. Refit the fuel tank (see page *11-127*).

Fuel Level Sensor - Rocket III Touring

Removal

Note:

- **The fuel level sensor is located at the front right hand edge on the underside of the fuel tank.**

1. Remove the fuel tank (see page *11-126*).

Warning

Observe the warning advice given in the general information section on the safe handling of fuel and fuel containers.

A fire, causing personal injury and damage to property could result from spilled fuel or fuel not handled or stored correctly.

Warning

Never drain fuel from the tank using non-approved, non-professional standard fuel handling equipment. A fire causing destruction of property and injury to persons may result from use of non-approved fuel handling equipment.

2. Using proprietary professional automotive workshop equipment approved for fuel handling, drain all fuel from the fuel tank.
3. Invert the fuel tank and place on a protective surface to prevent paint damage.
4. Disconnect the fuel electrical connector from the harness.
5. Detach the fuel level sensor harness from the clip beneath the fuel tank.

6. Release the bolts securing the fuel level sensor to the fuel tank.

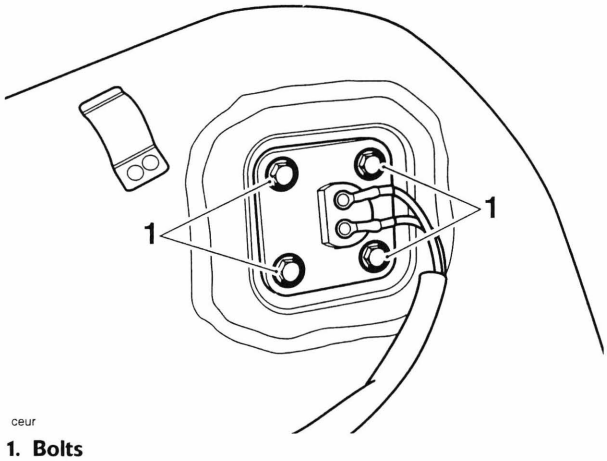

ceur

1. Bolts

7. Carefully manoeuvre the fuel level sensor out of the fuel tank. Discard the seal.

Installation

1. Position a new seal on to the fuel level sensor.
2. Refit the fuel sender to the fuel tank. Fit and tighten the bolts to **5 Nm**.
3. Refit the fuel tank (see page *11-127*).

Airbox, Intake Duct and Hoses

Removal

1. Remove the seat (see page *17-18* for Rocket III and Classic, see page *17-19* for Rocket III Touring, see page *17-18* for Rocket III Roadster).
2. Disconnect and remove the battery (see page *18-19*).
3. Remove the fuel tank (see page *11-123* for Rocket III and Classic, see page *11-126* for Rocket III Touring, see page *11-123* for Rocket III Roadster).
4. Remove both side covers (see page *17-20*).
5. Remove the engine infill panels (see page *17-21*).
6. Remove the rear wheel (see page *16-13* for Rocket III and Classic, refer to *16-15*).
7. Remove the rear mudguard (see page *17-26* for Rocket III and Classic, see page *17-29* for Rocket III Touring, see page *17-26* for Rocket III Roadster).
8. From the left hand side, detach the roll over valve from its clip, then release the two screws that secure the relay pack to the airbox side.

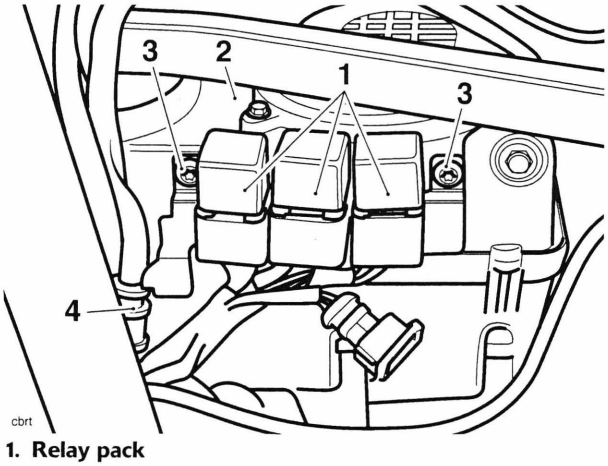

cbrt

1. Relay pack
2. Airbox
3. Screws
4. Roll-over valve

9. Ease the relay pack from the airbox.

Note:

- **It is not necessary to disconnect or remove the relays or disconnect the roll-over valve hoses.**

10. If an evaporative canister is fitted, cut the cable ties securing it to the airbox.

11. Make a note of (or mark) the hose locations before disconnecting them from the evaporative canister.

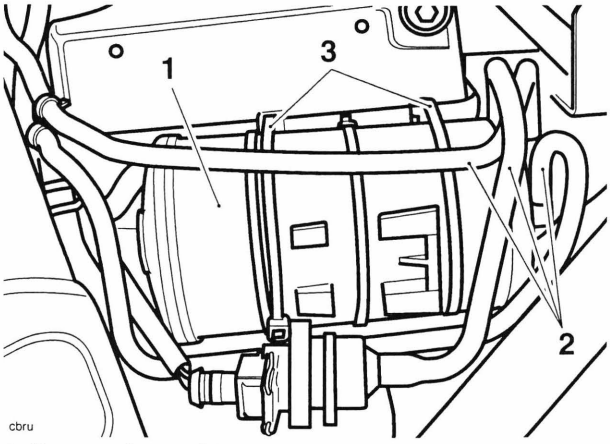

1. Evaporative canister
2. Hoses
3. Cable ties

12. Remove the canister.
13. Disconnect the electrical connections to the fall detection switch and alternator rectifier.

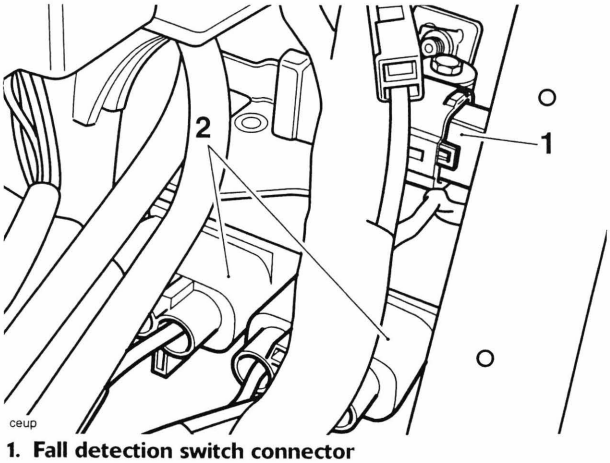

1. Fall detection switch connector
2. Alternator rectifier connectors

14. Release the fir-tree plugs securing the fuse box to the battery box.

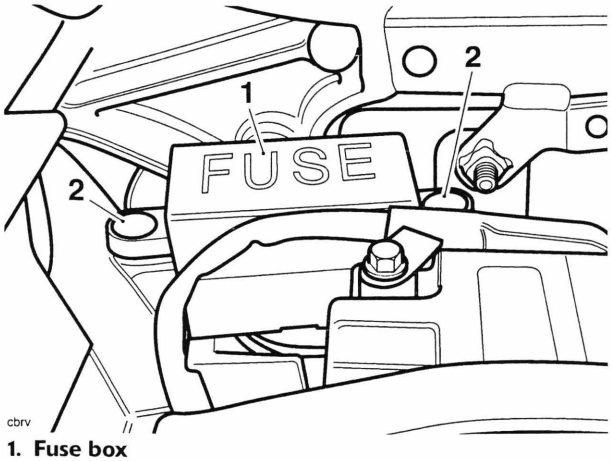

1. Fuse box
2. Fir-tree plugs

15. Manoeuvre the relay pack, fuse box and other electrical connectors aside.

Note:

- **For Rocket III and Classic continue from step 16 to step 26. Then continue from step 40 to step 52.**
- **For Rocket III Touring continue from step 27 to step 34. Then continue from step 40 to step 52.**
- **For Rocket III Roadster continue from step 35 to step 52.**

Rocket III and Classic

Note:

- **Before proceeding, make a note of the cable routings around the ECM and ECM bracket.**

16. Working on the right hand side, remove the screws securing the engine management ECM to its bracket.

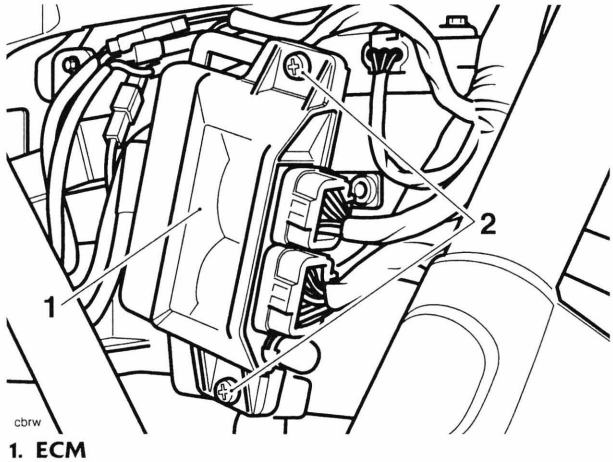

1. ECM
2. Screws

17. Ease the ECM from its bracket then disconnect the two electrical connections.
18. Place the ECM to one side.

19. Remove the three screws from the ECM bracket, then detach the bracket.

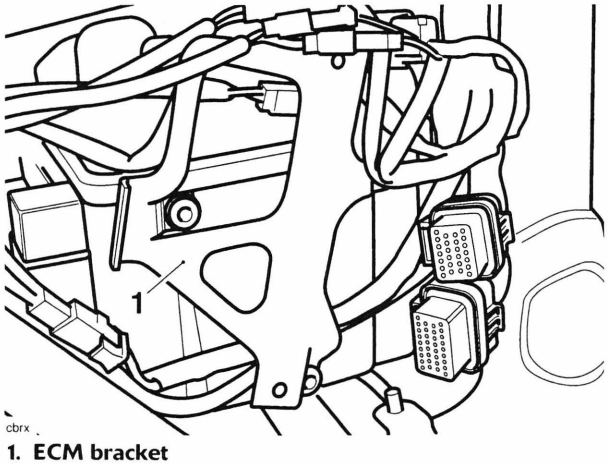

1. ECM bracket

20. Ease the two relay connectors from the battery box by pushing them upwards.

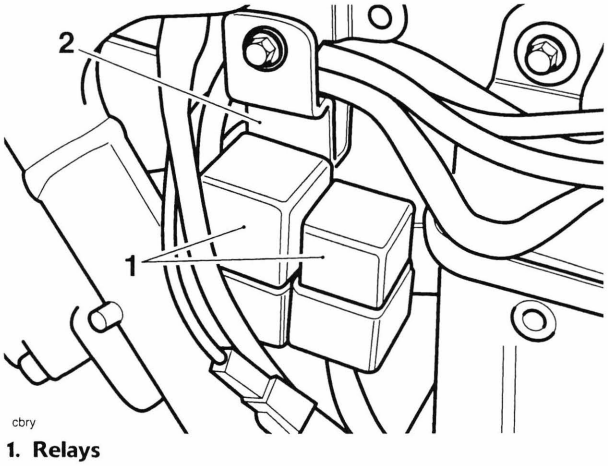

1. Relays
2. Battery box

21. Disconnect the barometric pressure sensor.

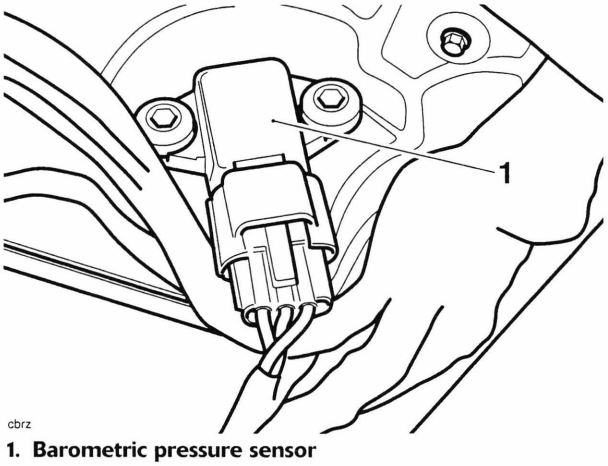

1. Barometric pressure sensor

22. Lay the relays, ECM connectors and other wiring aside.

23. Release the two screws securing the seat lock to the frame, then lay the seat lock (still attached to its cable) to one side.

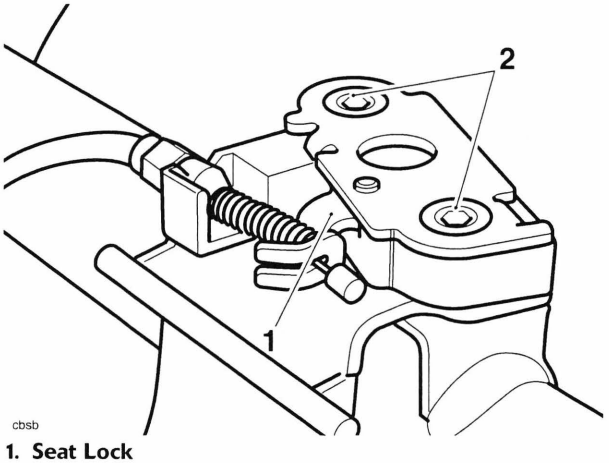

1. Seat Lock
2. Screws

24. Release the two screws securing the battery box assembly to the frame.

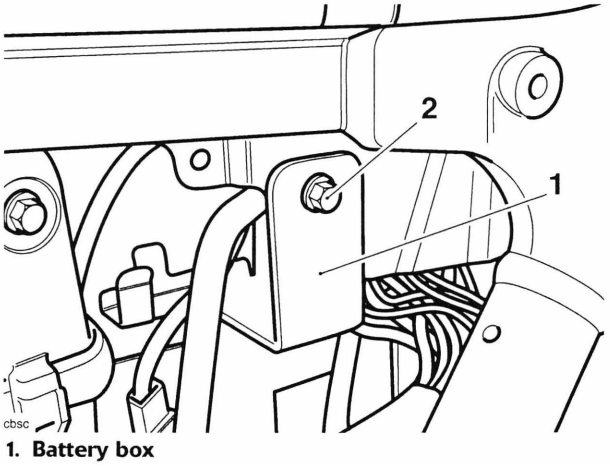

1. Battery box
2. Screw (left hand shown)

25. Manoeuvre the battery box assembly from the motorcycle and place aside.

26. For Rocket III and Classic, continue from step 35.

Rocket III Touring

Note:

- **Before proceeding, make a note of the cable routings around the ECM and ECM bracket.**

27. Working on the right hand side, detach the engine management ECM from its bracket then disconnect the two electrical connections.

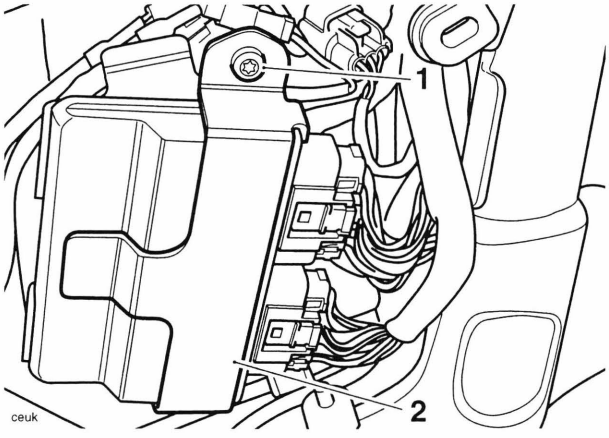

1. Screw
2. ECM retaining bracket

28. Place the ECM to one side.
29. Remove the three screws from the ECM bracket, then detach the bracket.

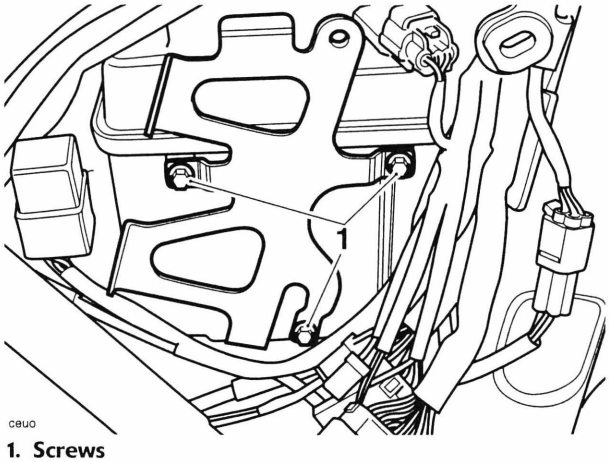

1. Screws

30. Ease the relay from the battery box by pushing it upwards.

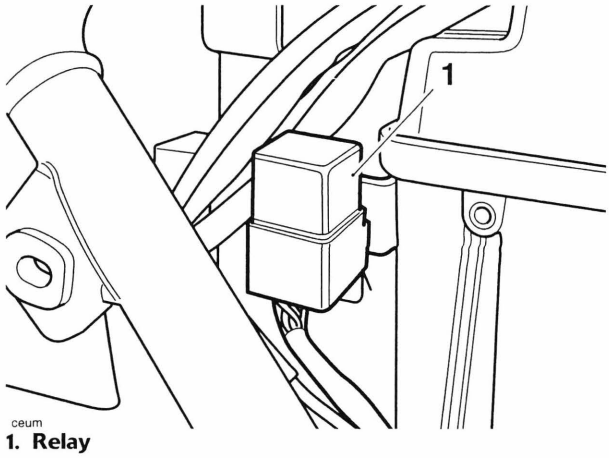

1. Relay
2. Battery box

31. Disconnect the barometric pressure sensor.

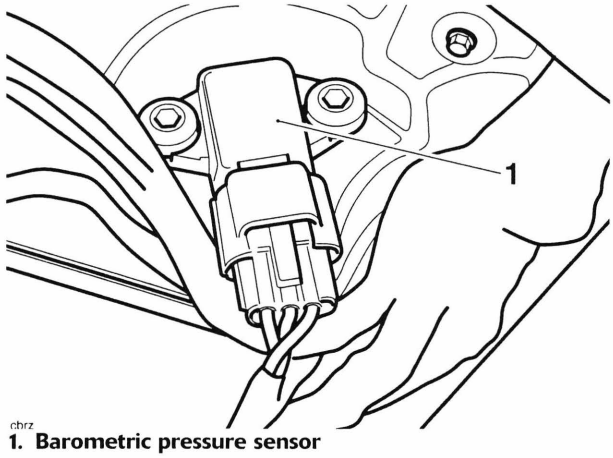

1. Barometric pressure sensor

32. Lay the relay, ECM connectors and other wiring aside.
33. Release the three screws securing the battery box assembly to the frame.

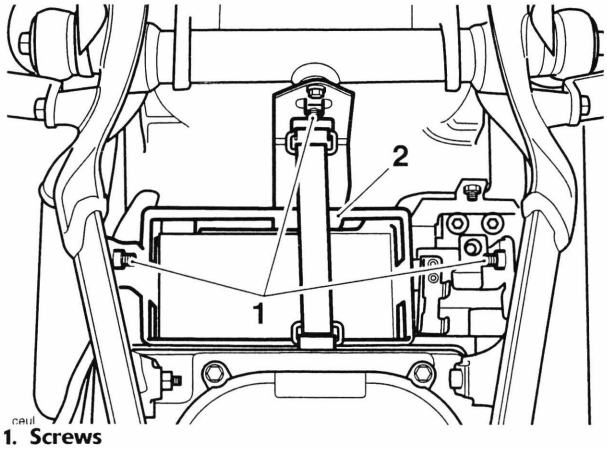

1. Screws
2. Battery box

34. Manoeuvre the battery box assembly from the motorcycle and place aside.

Rocket III Roadster

Note:

- **Before proceeding, make a note of the cable routings around the ECM and ECM bracket.**

35. Working on the right hand side, detach the ECM from its bracket, then disconnect the two electrical connections.

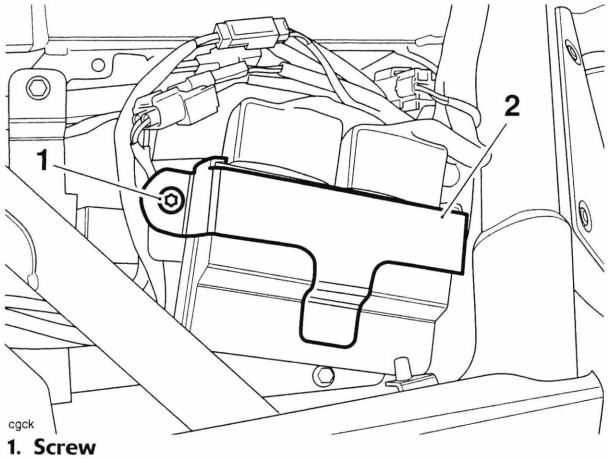

cgck

1. Screw
2. ECM retaining bracket

36. Place the ECM to one side.
37. Remove the three screws from the ECM bracket, then detach the bracket.

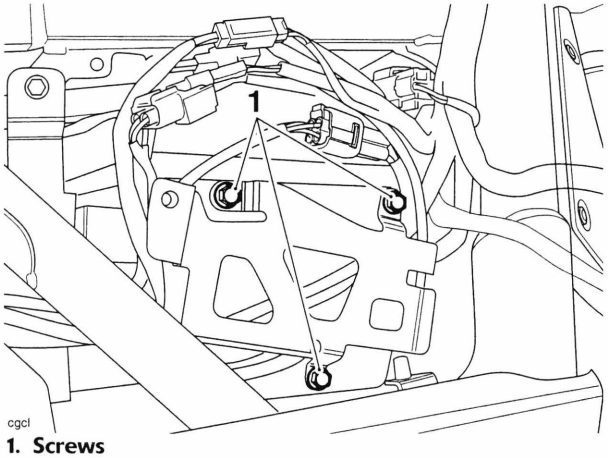

cgcl

1. Screws

38. Ease the ABS fuse box from the battery box by pushing it upwards and position it to one side.

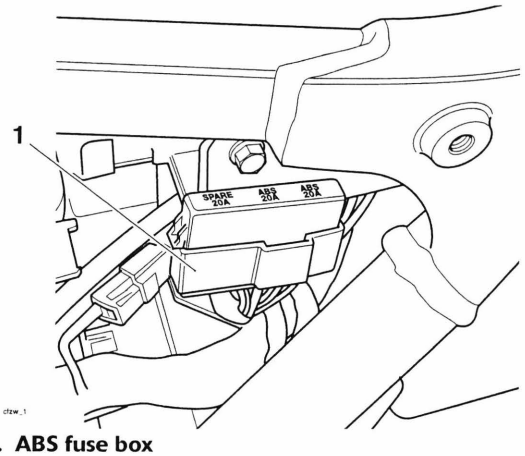

dfzw_1

1. ABS fuse box

39. Release the three screws securing the battery box assembly to the frame.

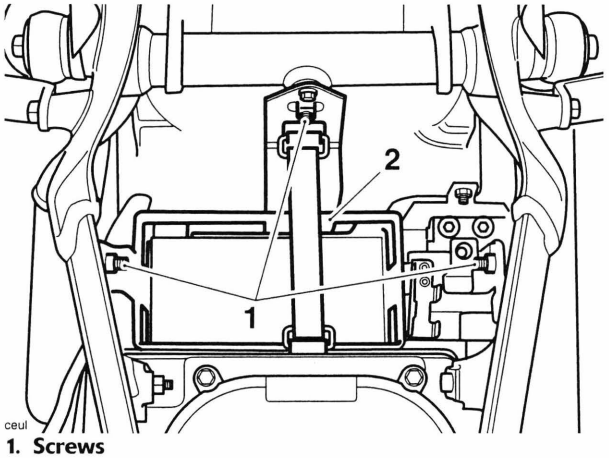

ceul

1. Screws
2. Battery box

All Models

40. Noting their orientation, release the three clips securing the intake plenum to the throttle bodies.

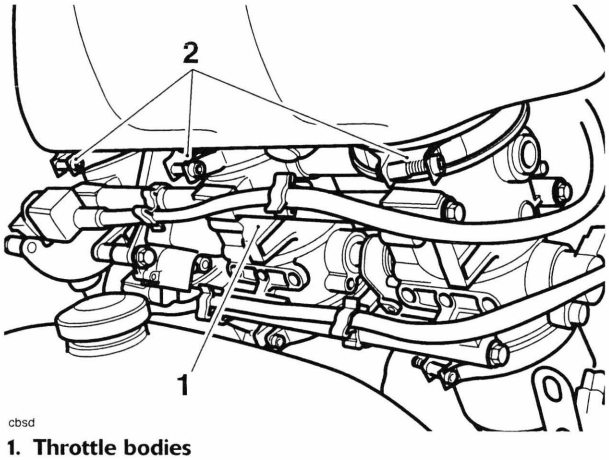

cbsd

1. Throttle bodies
2. Clips

41. Noting their orientation, release the two clips securing the intake plenum to the intake duct.

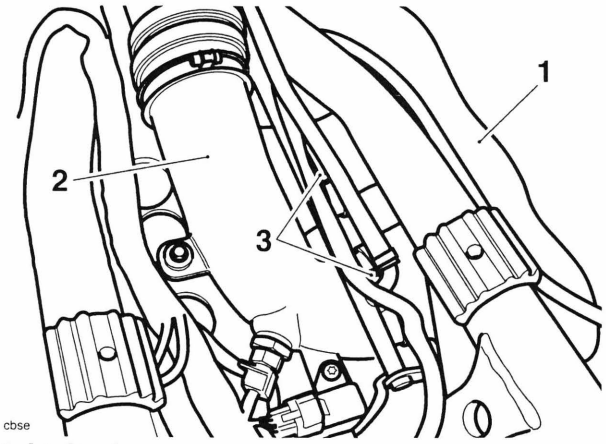

1. Intake plenum
2. Intake duct
3. Clips

42. Release the two screws securing the intake plenum to the throttle bodies.

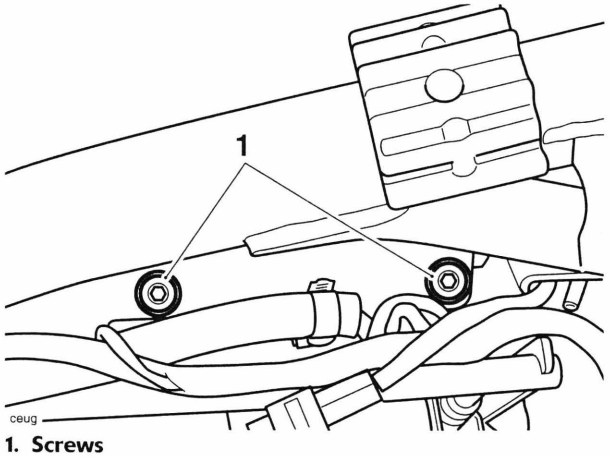

1. Screws

43. Carefully detach the intake plenum from the throttle bodies and intake duct. Place the intake plenum aside.

44. Release the clip securing the intake hose to the intake duct.

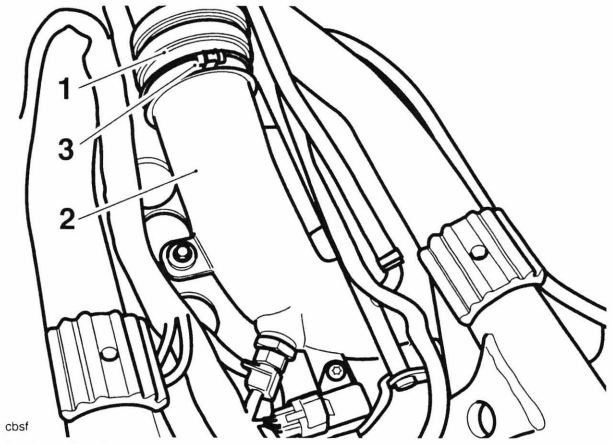

1. Intake hose
2. Intake duct
3. Clip

45. Disconnect the manifold absolute pressure (MAP) and air temperature sensors.

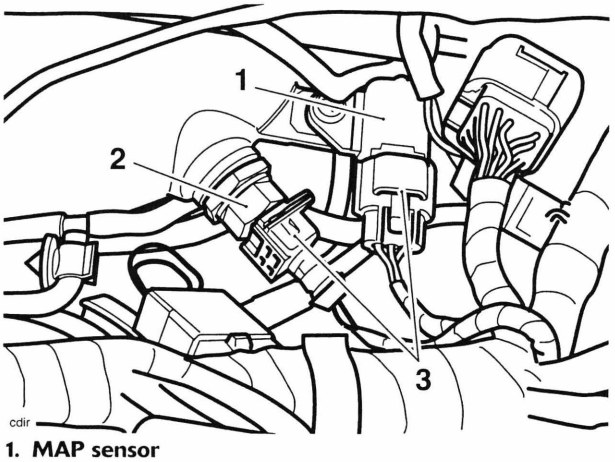

1. MAP sensor
2. Air temperature sensor
3. Connectors

Note:

- **Prior to removing the intake duct, the MAP sensor hose must be disconnected.**

46. Disconnect the MAP sensor hoses indicated in the illustration below.

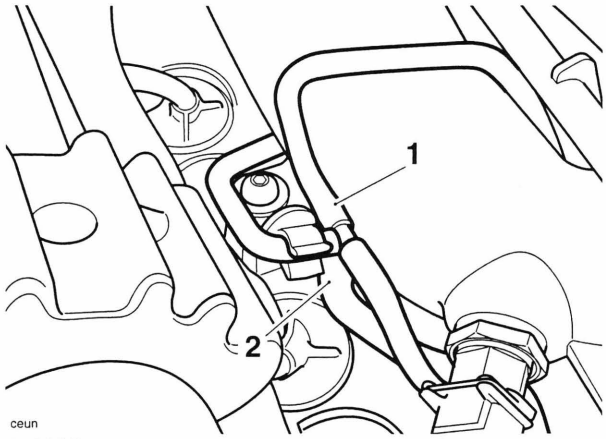

1. MAP sensor hose to centre throttle body
2. MAP sensor hose to sensor

47. Release the fixing securing the intake duct to its bracket. Remove the duct.

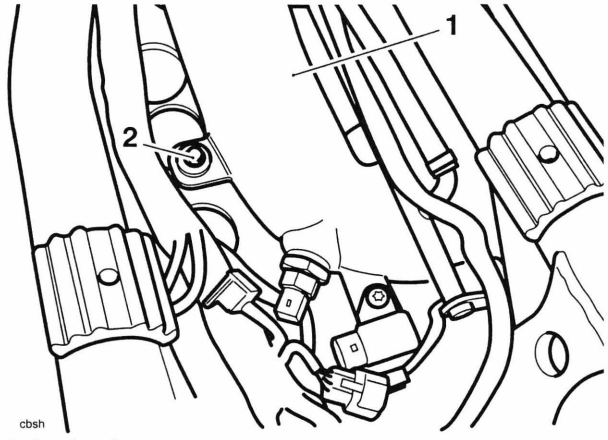

1. Intake duct
2. Fixing

48. Release the clip securing the intake hose to the airbox.

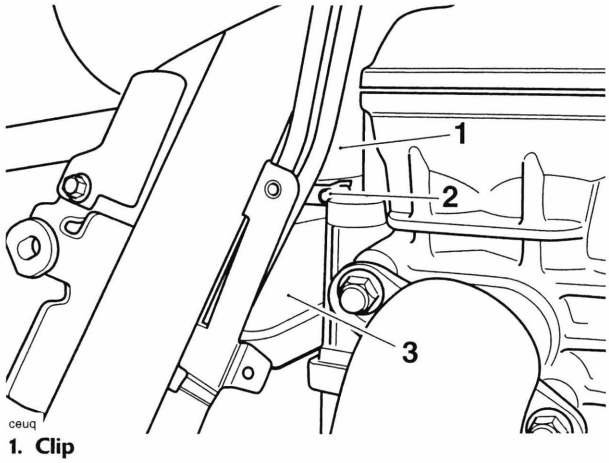

1. Clip
2. Intake hose
3. Airbox

49. Detach the intake hose and place it aside.
50. Release the clip securing the airbox breather hose to the engine.

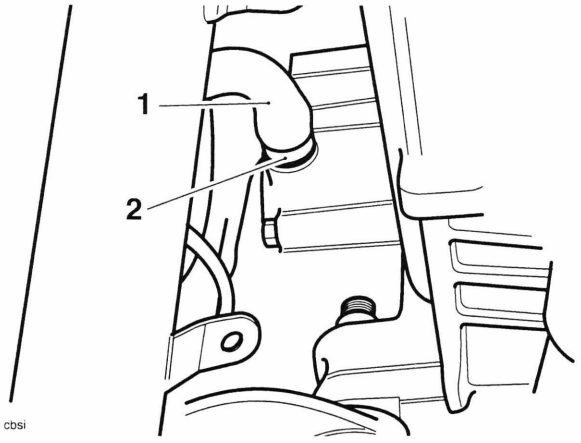

1. Breather hose
2. Clip

51. Release the two fixings securing the airbox to the frame.

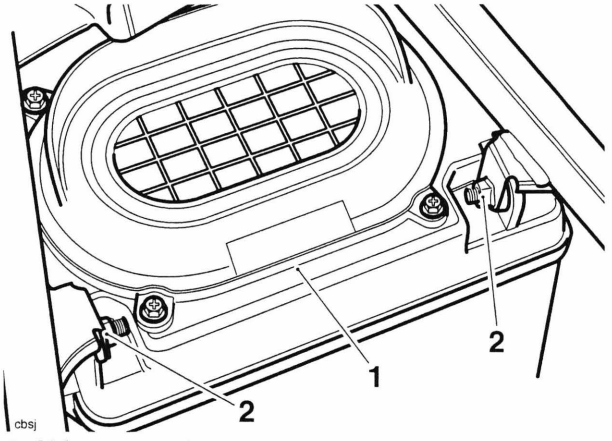

1. Airbox
2. Fixings

52. Manoeuvre the airbox from the frame.

Installation

1. Position the airbox to the frame ensuring the semi circular feature at the front of the airbox is located on the frame cross tube behind the engine. Attach the airbox breather hose to the engine and secure it with the clip before proceeding.

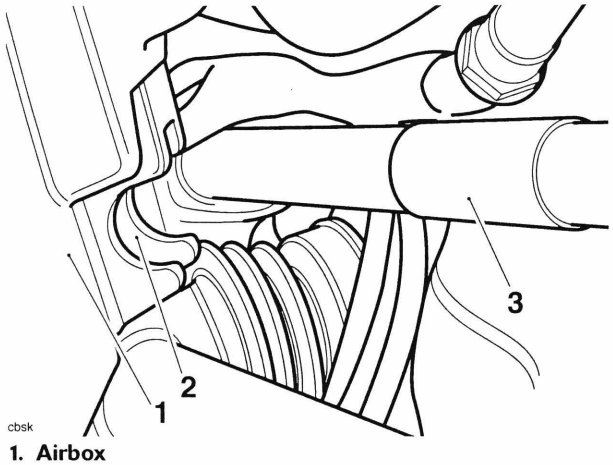

cbsk

1. Airbox
2. Semi-circular feature
3. Frame cross tube

2. Pivot the airbox upwards at the rear and engage the two bolts that secure it to the frame. Tighten the bolts to **9 Nm**.
3. Refit the intake hose to the airbox and secure it with the clip.

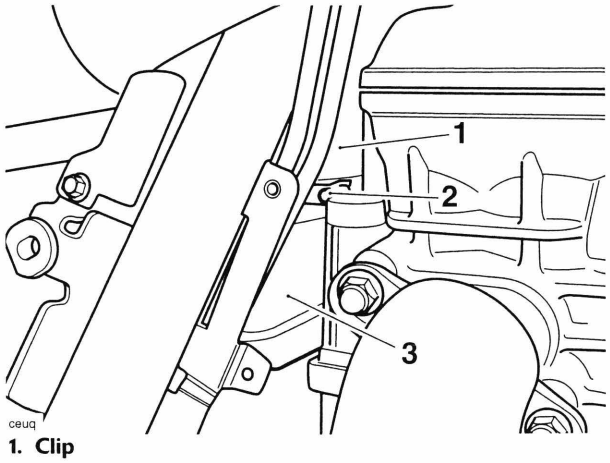

ceuq

1. Clip
2. Intake hose
3. Airbox

> **⚠ Caution**
>
> Ensure the hose is positively located to the airbox and is retained by the clip through its full circumference. Rectify if necessary as poor engine performance and engine damage may result from poor hose sealing.

4. Position the intake plenum to the throttle bodies. Fit and tighten the screws to **6 Nm**.

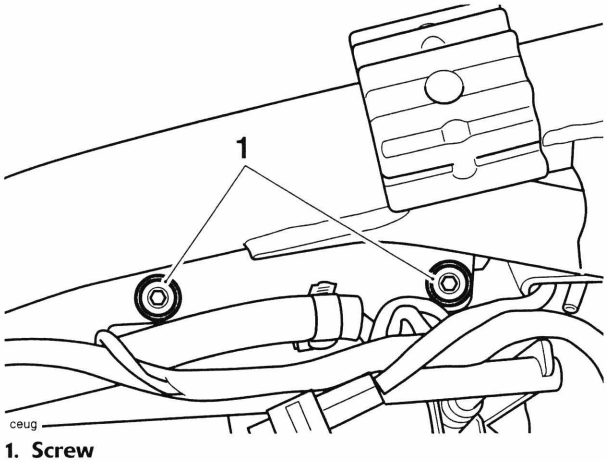

ceug

1. Screw

5. Position the intake duct to its bracket, the intake hose and the intake plenum. Secure the intake hose with its clip. Tighten the duct fixing to **6 Nm**.

> **⚠ Caution**
>
> Ensure the hose is positively located to the duct and is retained by the clip through its full circumference. Rectify if necessary as poor engine performance and engine damage may result from poor hose sealing.

6. Tighten the three clips to the throttle bodies.

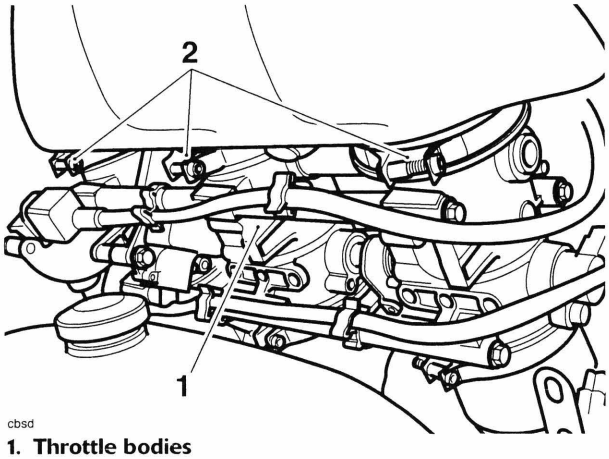

cbsd

1. Throttle bodies
2. Clips

7. Tighten the two clips securing the intake plenum to the intake duct.

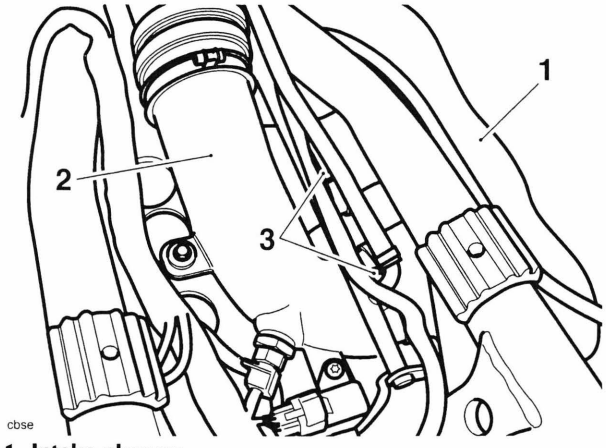

1. Intake plenum
2. Intake duct
3. Clips

> **⚠ Caution**
>
> Ensure the plenum is positively located to the throttle bodies and intake duct and is retained by the clips through their full circumference. Rectify if necessary as poor engine performance and engine damage may result from poor plenum/duct sealing.

8. Reconnect the MAP sensor hoses.

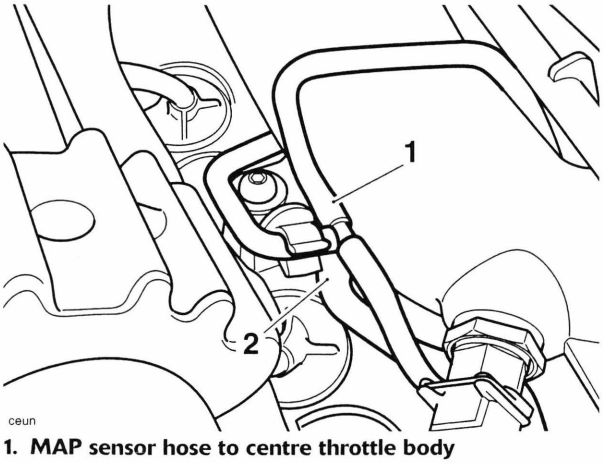

1. MAP sensor hose to centre throttle body
2. MAP sensor hose to sensor

9. Reconnect the MAP and air temperature sensors.

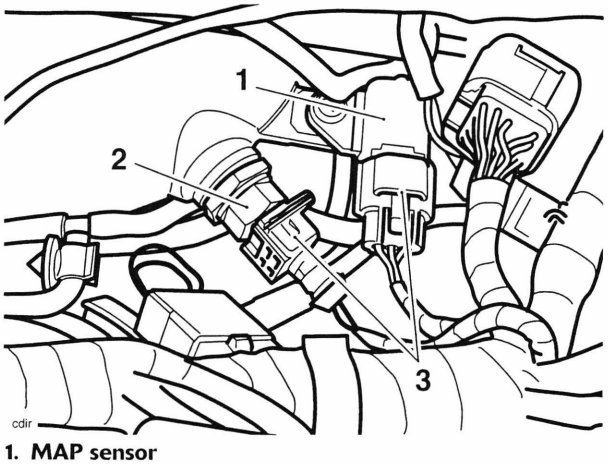

1. MAP sensor
2. Air temperature sensor
3. Connectors

10. Position the battery box to the frame.
11. Tighten the battery box fixings to **9 Nm**.

Note:

- **Rocket III and Classic continue from step 12 to step 17. Then continue from step 27 to step 40.**
- **Rocket III Touring continue from step 18 to step 21. Then continue from step 27 to step 40.**
- **Rocket III Roadster continue from step 22 to step 40.**

Rocket III and Classic

12. Reposition the seat lock to the frame and battery box. Tighten the lock fixings to **5 Nm**.
13. On the right hand side, fit the two relays and sockets to their mounting points on the battery box. Ensure that both relays are fully engaged on their mountings.

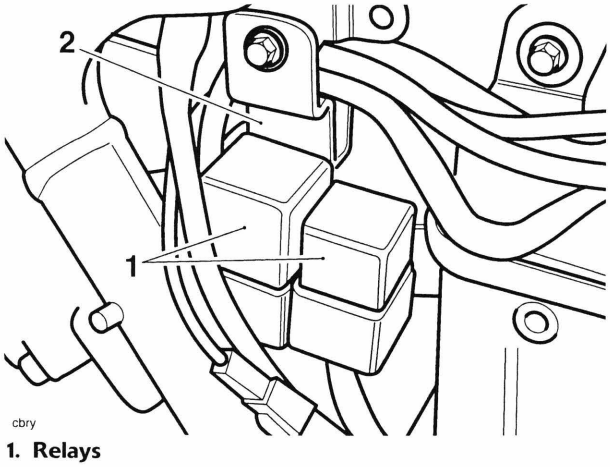

cbry

1. Relays
2. Battery box

14. Arranging the cables to the rear of the ECM bracket as noted prior to removal, refit the ECM bracket and tighten its screws to **3 Nm**.

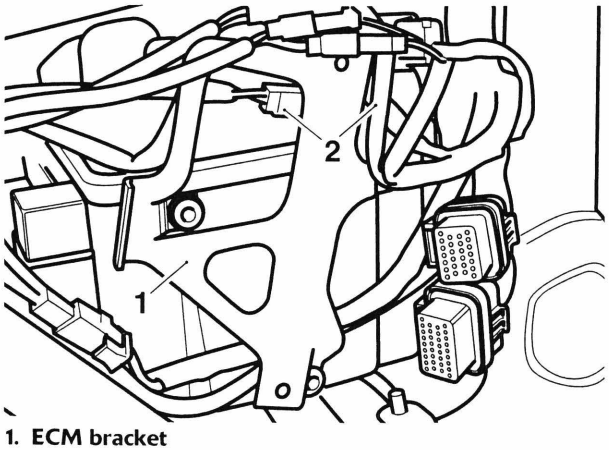

1. ECM bracket
2. Cables

15. Locate the ECM to its bracket and tighten its screws to **5 Nm**.
16. Reconnect both multi-plugs to the ECM.
17. For Rocket III and Classic, continue from step 22.

Rocket III Touring

18. On the right hand side, fit the relay and socket to the mounting point on the battery box. Ensure that the relay is fully engaged on its mounting.

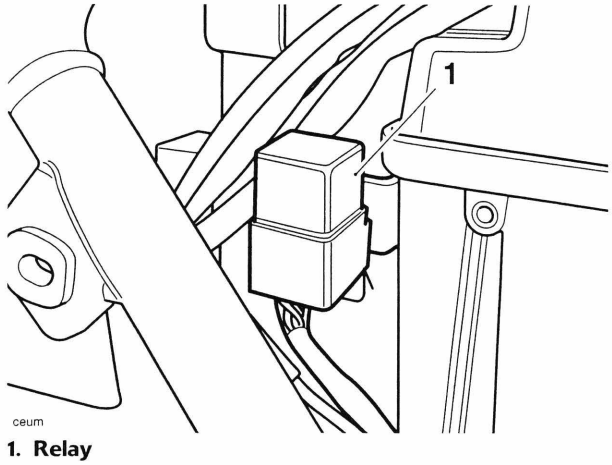

ceum

1. Relay
2. Battery box

19. Arranging the cables to the rear of the ECM bracket as noted prior to removal, refit the ECM bracket and tighten its screws to **3 Nm**.

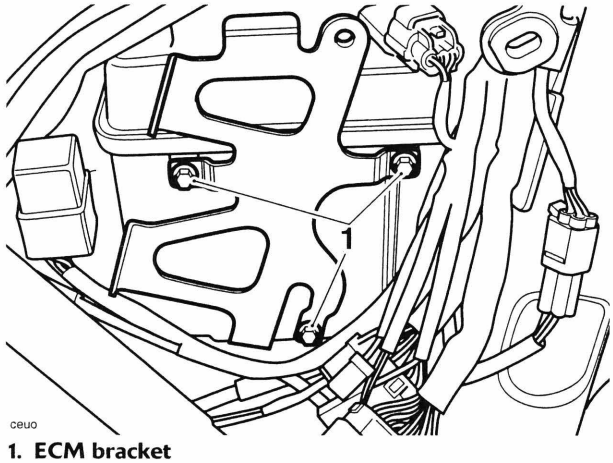

ceuo

1. ECM bracket

20. Reconnect both multi-plugs to the ECM.
21. Attach the ECM to its bracket and tighten the screw to **5 Nm**.

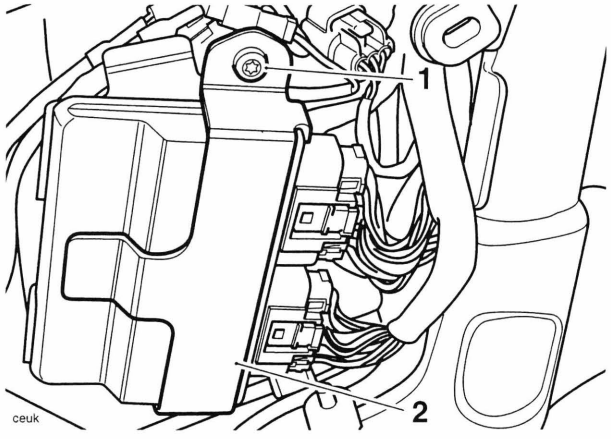

1. Screw
2. ECM retaining bracket

Rocket III Roadster

22. Refit the battery box assembly and tighten the screws to **9 Nm**.

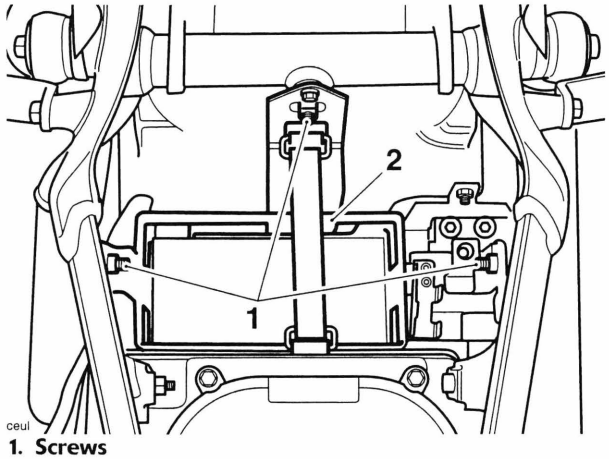

1. Screws
2. Battery box

23. Refit the ABS fuse box to the battery box.

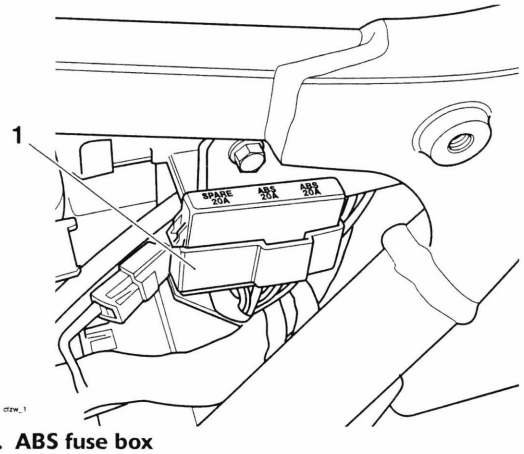

1. ABS fuse box

24. Arrange the cables to the rear of the ECM bracket as noted prior to removal, refit the ECM bracket and tighten the screws to **3 Nm**.

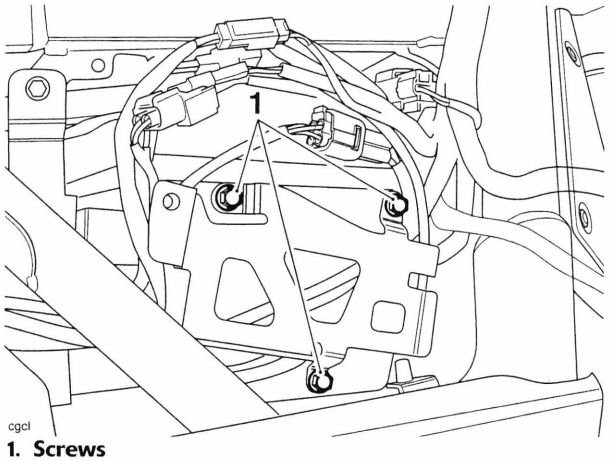

1. Screws

25. Locate the ECM to its bracket and tighten the screw to **5 Nm**.

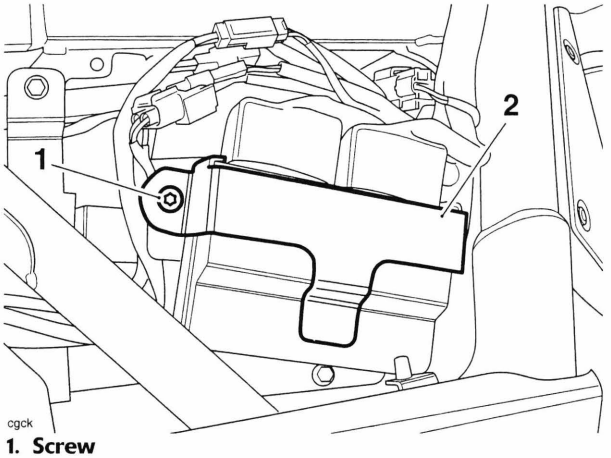

1. Screw
2. ECM retaining bracket

All Models

26. Reconnect the barometric pressure sensor.

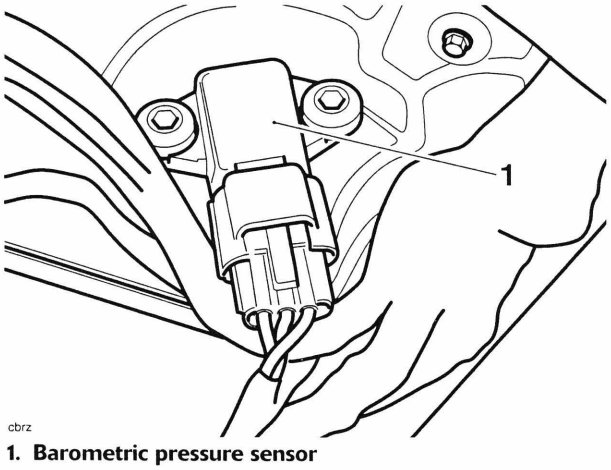

1. Barometric pressure sensor

27. Position the fuse box to the battery box. Retain the fuse box with new fir-tree plugs.
28. Reconnect the fall detection switch and alternator rectifier.
29. Working on the left hand side, position the relay pack to the airbox.
30. Fit the relay pack screws and tighten to **3 Nm**.

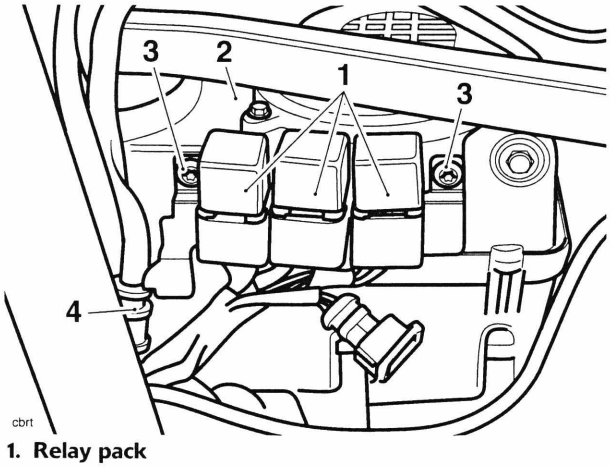

1. Relay pack
2. Airbox
3. Screws
4. Roll-over valve

31. Re-attach the roll over valve to its bracket.
32. If fitted, position and secure the evaporative canister to the airbox using new cable-ties. Re-attach the hoses to the canister ensuring they are fitted in the positions noted during strip-down.

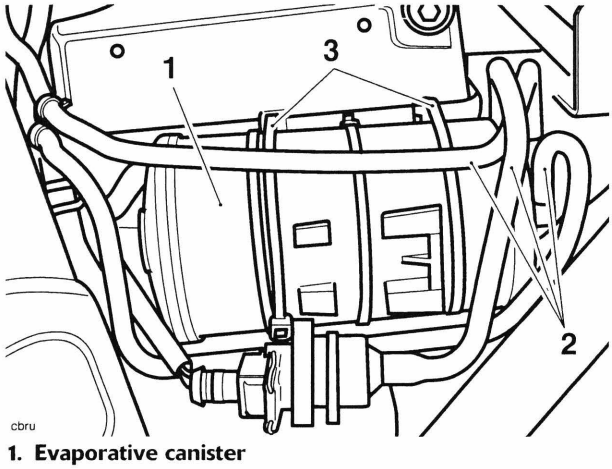

1. Evaporative canister
2. Hoses
3. Cable ties

33. Refit the rear mudguard (see page *17-28* for Rocket III and Classic, see page *17-31* for Rocket III Touring, see page *17-28* for Rocket III Roadster).
34. Refit the rear wheel (see page *16-14* for Rocket III and Classic, see page *16-17* for Rocket III Touring, see page *16-14* for Rocket III Roadster).
35. Refit engine infill panels (see page *17-21* for Rocket III and Classic, see page *17-21* for Rocket III Roadster).
36. Refit both side covers (see page *17-21*).
37. Refit the fuel tank (see page *11-124* for Rocket III and Classic, see page *11-127* for Rocket III Touring, see page *11-124* for Rocket III Roadster).
38. Refit and reconnect the battery (see page *18-19*).
39. Refit the seat (see page *17-18* for Rocket III and Classic, see page *17-19* for Rocket III Touring, see page *17-18* for Rocket III Roadster).

Air Filter

Removal

1. Remove the seat (see page *17-18* for Rocket III and Classic, see page *17-19* for Rocket III Touring).
2. Disconnect the battery, negative (black) lead first.
3. **Rocket III, Classic and Roadster only:** Pivot the took kit upwards to gain access to the top of the air box.
4. Release the four screws securing the air filter cover to the airbox.

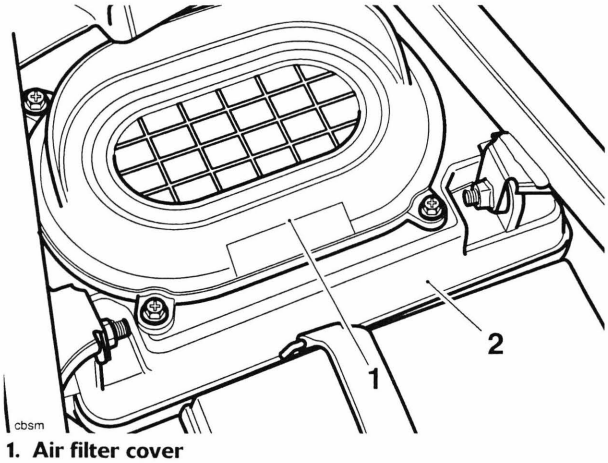

1. Air filter cover
2. Airbox

5. Raise the filter cover to detach the air filter element from the housing.

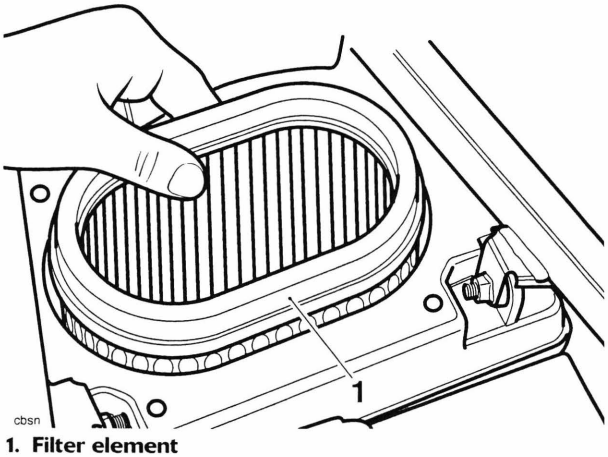

1. Filter element

6. Inspect the cover seal for damage.

Installation

1. Clean the air filter cover and interior of the airbox.
2. Locate the new filter element to the airbox.
3. Refit (or replace if necessary) the cover seal, fit the filter cover and tighten the screws to **3 Nm**.
4. Reconnect the battery, positive (red) lead first.
5. **Rocket III, Classic and Roadster only:** Place the tool kit in its installed position on the frame.
6. Refit the seat (see page *17-18* for Rocket III and Classic, see page *17-19* for Rocket III Touring).

Intake Air Temperature Sensor

Removal

1. Remove the seat (see page *17-18* for Rocket III and Classic, see page *17-19* for Rocket III Touring).
2. Disconnect the battery, negative (black) lead first.
3. Raise and prop the fuel tank (see page *11-121* for Rocket III and Classic, see page *11-125* for Rocket III Touring).
4. Disconnect the electrical multi-plug from the sensor.

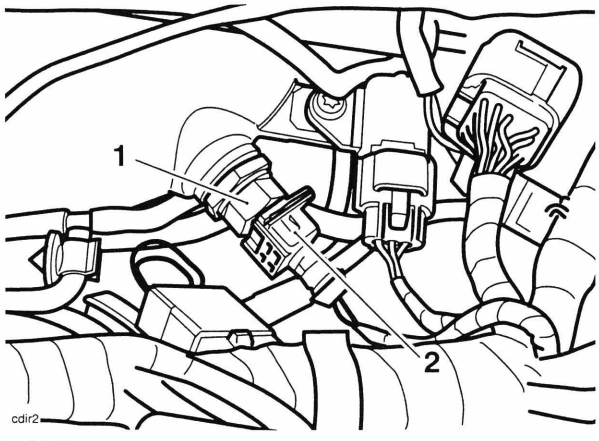

1. Air temperature sensor
2. Multi-plug

5. Unscrew the sensor from the intake duct.

Installation

1. Fit the sensor to the intake duct and tighten to **4 Nm**.
2. Reconnect the multi-plug.
3. Support the tank, remove and stow the tank prop, then lower the tank to the frame and secure it (see page *11-123* for Rocket III and Classic, see page *11-125* for Rocket III Touring).
4. Reconnect the battery, positive (red) lead first.
5. Refit the seat (see page *17-18* for Rocket III and Classic, see page *17-19* for Rocket III Touring).

Manifold Absolute Pressure (MAP) Sensor

Removal

1. Remove the rider's seat (see page *17-18* for Rocket III, Classic and Roadster, see page *17-19* for Rocket III Touring).
2. Disconnect the battery, negative (black) lead first.
3. Raise and prop the fuel tank (see page *11-121* for Rocket III, Classic and Roadster, see page *11-125* for Rocket III Touring).
4. Disconnect the electrical multi-plug from the sensor.

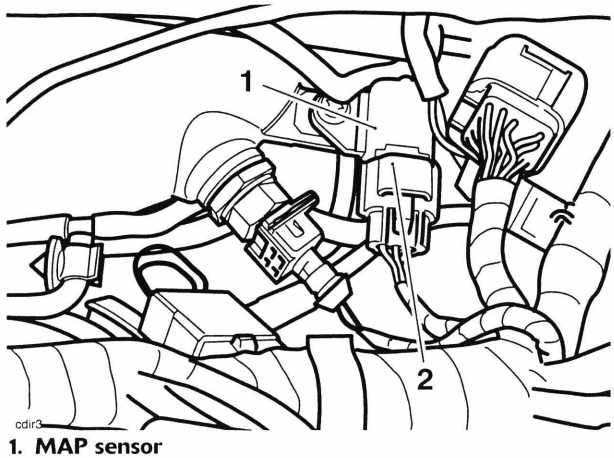

1. MAP sensor
2. Multi-plug

5. Unscrew the bolt securing the sensor to the intake duct.
6. Raise the sensor in order to disconnect the hose from below it.

Installation

1. Fit the sensor to the intake duct, reconnect the hose and tighten the bolt to **6 Nm**.
2. Reconnect the multi-plug.
3. Support the tank, remove and stow the tank prop, then lower the tank to the frame and secure it (see page *11-123* for Rocket III, Classic and Roadster, see page *11-125* for Rocket III Touring).
4. Reconnect the battery, positive (red) lead first.
5. Refit the seat (see page *17-18* for Rocket III and Classic, see page *17-19* for Rocket III Touring).

Barometric Pressure Sensor

Removal

1. Remove the seat (see page *17-18* for Rocket III, Classic and Roadster, see page *17-19* for Rocket III Touring).
2. Disconnect the battery, negative (black) lead first.
3. Remove the right hand side cover (see page *17-20*).
4. Disconnect the electrical multi-plug from the sensor.

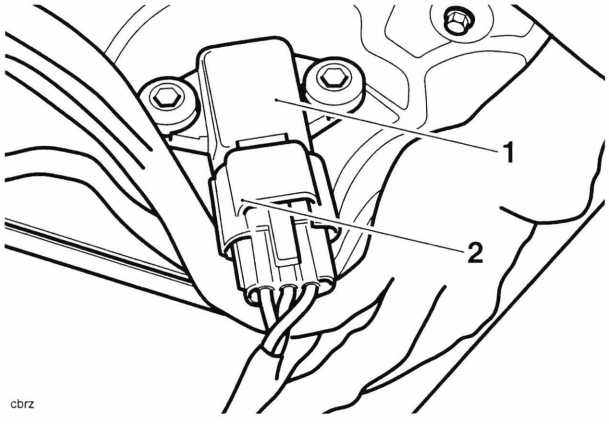

1. Barometric pressure sensor
2. Multi-plug

5. Release the two screws securing the sensor to the airbox.
6. Raise the sensor to remove it from the airbox and collect the O-ring.

Installation

1. Take a new O-ring and lubricate it with a smear of petroleum jelly. Fit the O-ring to the sensor, then fit the sensor to the airbox, tightening the two screws to **6 Nm**.
2. Reconnect the multi-plug.
3. Refit the right hand side cover (see page *17-21*).
4. Reconnect the battery, positive (red) lead first.
5. Refit the seat (see page *17-18* for Rocket III, Classic and Roadster, see page *17-19* for Rocket III Touring).

Gear Position Sensor

Removal

1. Remove the seat (see page *17-18* for Rocket III, Classic and Roadster, see page *17-19* for Rocket III Touring).
2. Disconnect the battery, negative (black) lead first.
3. Remove the engine infill panel from the left hand side of the engine (see page *17-21*).

Note:

- **Behind the engine infill panel, secured by the same fixings as the panel, is a connector support bracket. The gear position sensor plug is located here.**

4. Release the two screws securing the sensor to the rear of the engine, on the left hand side.

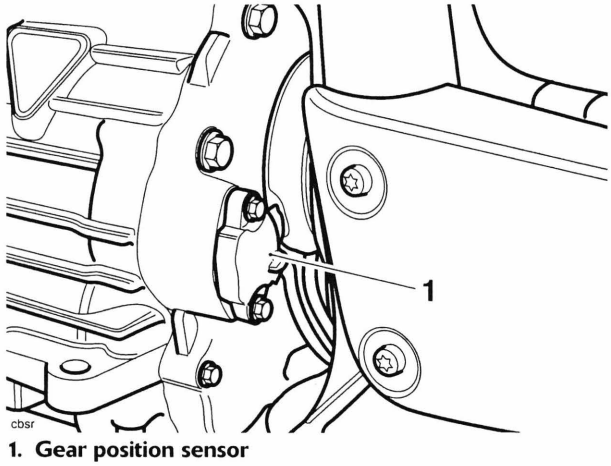

1. Gear position sensor

5. Ease the connector rearwards to detach it from the engine. Recover and discard the O-ring that seals the sensor to the engine.

Note:

- **Make a note of the sensor's wiring run in order to return it to the same routing on assembly.**

6. Trace the connector wiring back to the connector. Disconnect the sensor and detach it from the motorcycle.

Installation

1. Fit a new O-ring to the sensor. Lubricate the O-ring with a smear of petroleum jelly.
2. Position the sensor to the engine and route the wiring as noted prior to removal.
3. Retain the sensor with the two screws, tightening them to **5 Nm**.
4. Connect the sensor to the main wiring harness. Re-attach the connector to the bracket.

5. Position the left hand engine infill panel to the frame. Align the screw holes in the panel with those in the connector bracket and frame. Fit and tighten the screws to **3 Nm**.
6. Reconnect the battery, positive (red) lead first.
7. Refit the seat (see page *17-18* for Rocket III, Classic and Roadster, see page *17-19* for Rocket III Touring).

Road Speed Sensor

Removal

1. Remove the seat (see page *17-18* for Rocket III, Classic and Roadster, see page *17-19* for Rocket III Touring).
2. Disconnect the battery, negative (black) lead first.
3. Remove the engine infill panel from the left hand side of the engine (see page *17-21*).

Note:

- **Behind the engine infill panel, secured by the same fixings as the panel, is a connector support bracket. The road speed sensor plug is located here.**

4. Release the screw securing the sensor to the bottom of the engine, on the left hand side.

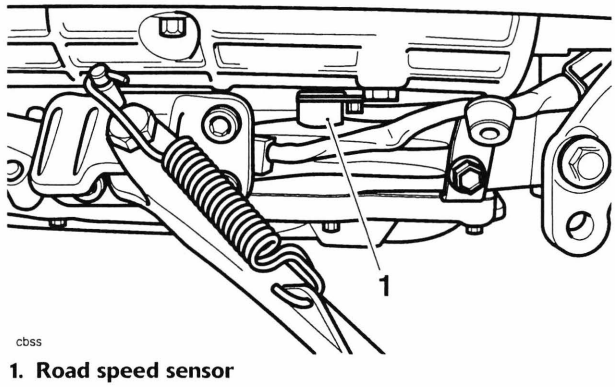

cbss

1. Road speed sensor

5. Ease the sensor downwards to detach it from the engine. Recover the O-ring that seals the sensor to the engine (the O-ring is normally retained by the sensor).

Note:

- **Make a note of the sensor's wiring run in order to return it to the same routing on assembly.**

6. Trace the connector wiring back to the connector. Disconnect the sensor and detach it from the motorcycle.

Installation

1. Fit a new O-ring to the sensor. Lubricate the O-ring with a smear of petroleum jelly.
2. Position the sensor to the engine and route the wiring as noted prior to removal.
3. Retain the sensor with the screw then tighten the screw to **7.5 Nm**.
4. Connect the sensor to the main wiring harness. Re-attach the connector to the bracket.
5. Position the left hand engine infill panel to the frame. Align the screw holes in the panel with those in the connector bracket and frame. Fit the screws and tighten to **3 Nm**.
6. Reconnect the battery, positive (red) lead first.
7. Refit the seat (see page *17-18* for Rocket III, Classic and Roadster, see page *17-19* for Rocket III Touring).

Crankshaft Position Sensor

Removal

1. Remove the seat (see page *17-18* for Rocket III, Classic and Roadster, see page *17-19* for Rocket III Touring).
2. Disconnect the battery, negative (black) lead first.
3. Remove the engine infill panel from the left hand side of the engine (see page *17-21*).

Note:

- **Behind the engine infill panel, secured by the same fixings as the panel, is a connector support bracket. The crankshaft position sensor plug is located here.**

4. Release the screw securing the sensor to the bottom of the alternator cover.

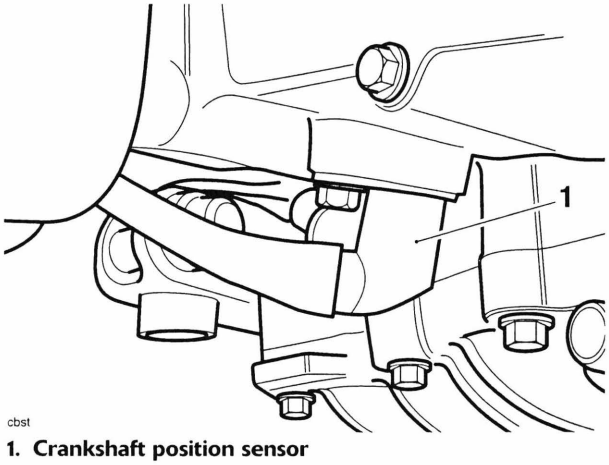

cbst

1. Crankshaft position sensor

5. Ease the sensor downwards to detach it from the engine. Recover and discard the O-ring.

Note:

- **Make a note of the sensor's wiring run in order to return it to the same routing on assembly.**

6. Trace the connector wiring back to the connector. Disconnect the sensor and detach it from the motorcycle.

Installation

1. Fit a new O-ring to the sensor. Lubricate the O-ring with a smear of petroleum jelly.
2. Position the sensor to the engine and route the wiring as noted prior to removal.
3. Retain the sensor with the screw, tightening it to **8 Nm**.

Note:

- **The air gap for the crankshaft position sensor is not adjustable.**

4. Connect the sensor to the main wiring harness. Re-attach the connector to the bracket.
5. Position the left hand engine infill panel to the frame. Align the screw holes in the panel with those in the connector bracket and frame. Fit the screws and tighten to **3 Nm**.
6. Reconnect the battery, positive (red) lead first.
7. Refit the seat (see page *17-18* for Rocket III, Classic and Roadster, see page *17-19* for Rocket III Touring).

Throttle Cables

Warning

The throttle grip controls the throttle valves in the throttle bodies. If the throttle cables are incorrectly adjusted, either too tight or too loose, the throttle may be difficult to control and performance will be adversely affected.

Check the throttle grip free play in accordance with scheduled maintenance requirements and make adjustments as necessary.

Always be alert for changes in the 'feel' of the throttle and have the throttle system checked by an authorised Triumph dealer if any changes are detected. Changes can be due to wear in the mechanism, which could lead to a sticking throttle.

An incorrectly adjusted, sticking or stuck throttle will lead to loss of motorcycle control and an accident.

Removal

Note:

- **Prior to removal, clearly identify the opening and closing cables so that they may be refitted in the correct positions.**

1. Remove the seat (see page *17-18* for Rocket III, Classic and Roadster, see page *17-19* for Rocket III Touring).
2. Disconnect the battery, negative (black) lead first.
3. Raise and prop the fuel tank (see page *11-121* for Rocket III, Classic and Roadster, see page *11-125* for Rocket III Touring).
4. **Rocket III and Classic only:** Remove the headstock cover.

5. Remove the fixing bolts and position the coolant expansion tank aside.

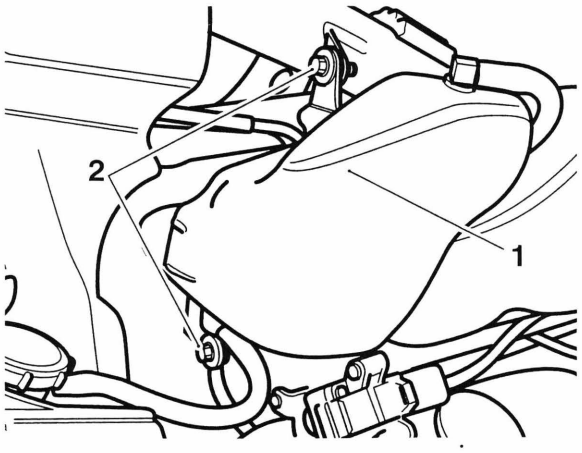

1. Coolant expansion tank
2. Fixings

6. Slacken the adjuster locknuts at the throttle body such that they will allow the outer cables to be detached from the cable brackets.

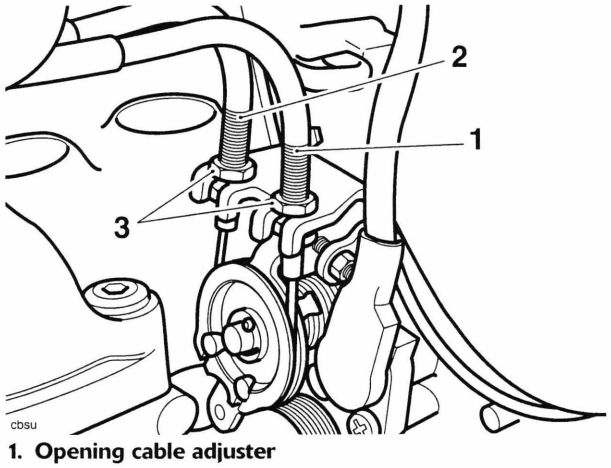

1. Opening cable adjuster
2. Closing cable adjuster
3. Locknuts

7. Detach the inner cables from the throttle cam.

Note:

- **Rocket III, Classic and Roadster continue from step 8 to step 13. Then continue from step 17.**
- **Rocket III Touring continue from step 14 to step 17.**

Rocket III Classic and Roadster

8. At the twist grip end, remove the screws securing the right hand switch cube to the brake master cylinder.

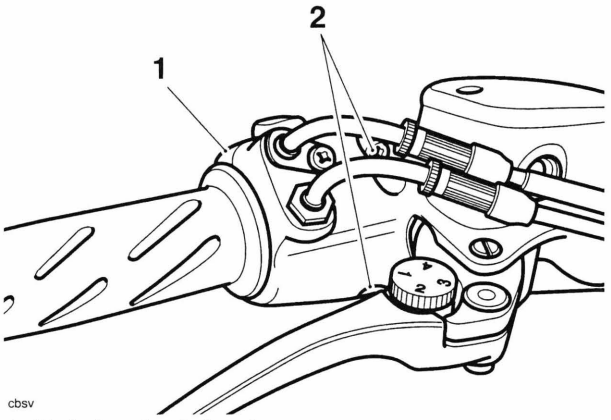

1. Right hand switch cube
2. Screws

9. Separate the switch cube from the master cylinder.
10. Release the screw and union securing the throttle cables to the master cylinder.

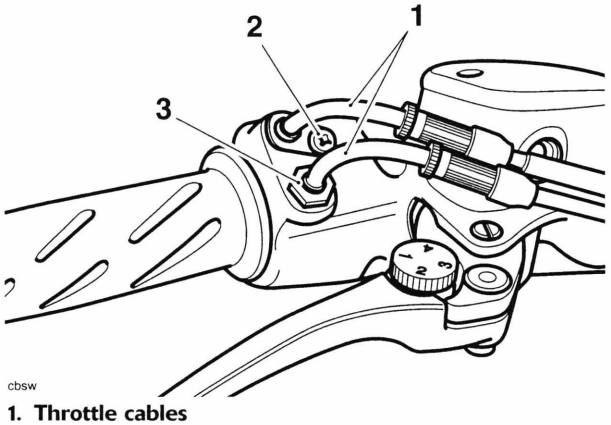

1. Throttle cables
2. Screw
3. Union

11. Release, but do not remove completely, the two screws securing the master cylinder to the handlebar.

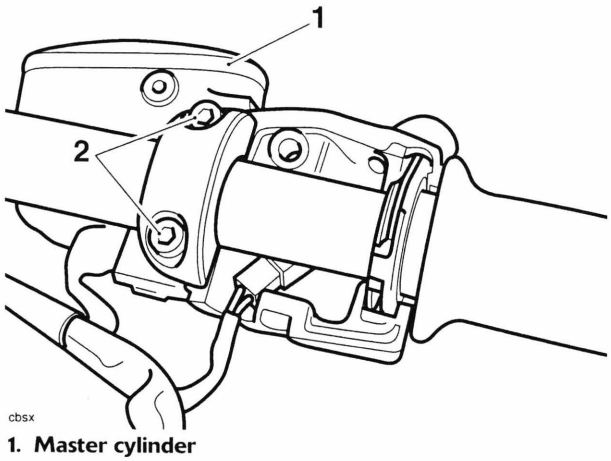

cbsx

1. Master cylinder
2. Screws

12. Ease the master cylinder away from the handlebar to allow space for the throttle cables to be detached from the twist grip. Detach the cables from the twist grip.

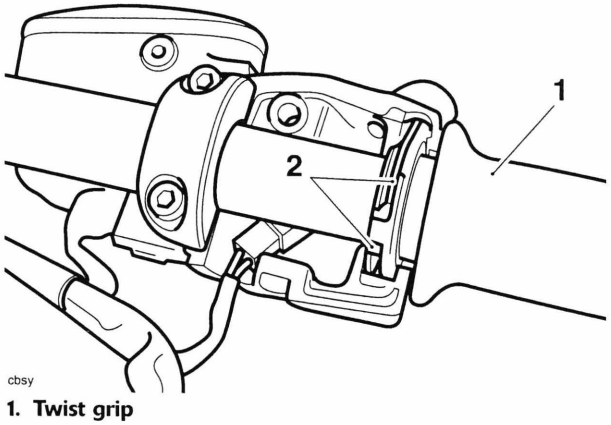

cbsy

1. Twist grip
2. Throttle cables

13. For Rocket III, Classic and Roadster, continue from step 17.

Rocket III Touring

14. At the twist grip end, release the screw and union securing the throttle cables to the switch cube.

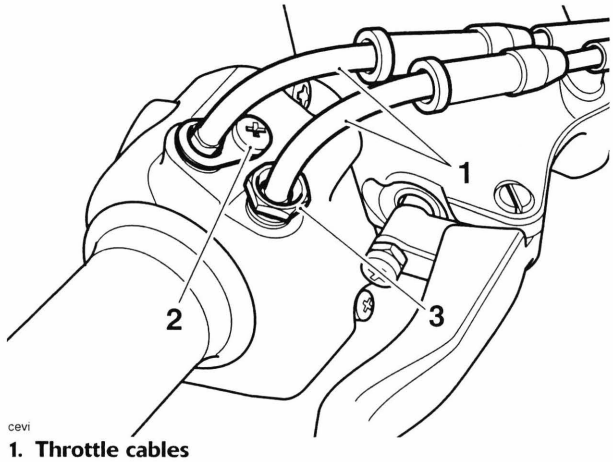

cevi

1. Throttle cables
2. Screw
3. Union

15. Remove the screws securing the right hand switch cube.

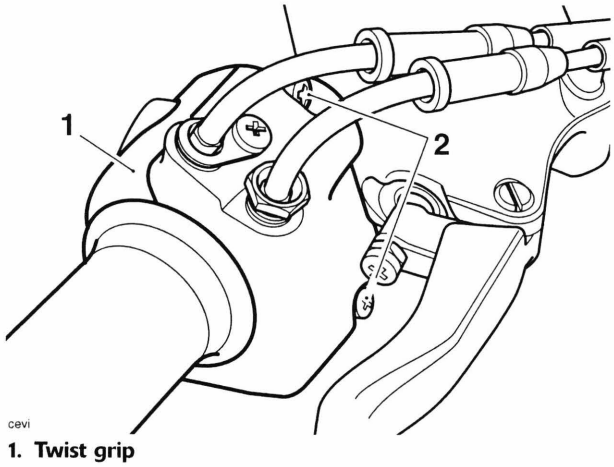

cevi

1. Twist grip
2. Screws

16. Detach the switch cube then release the inner cables from the twist grip.

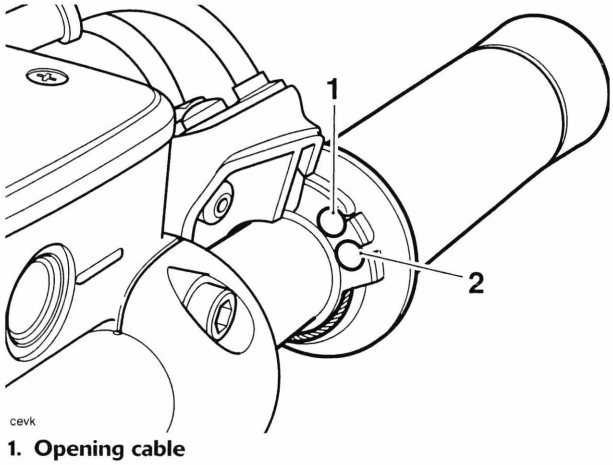

cevk

1. Opening cable
2. Closing cable

All Models

17. Note the routing of the throttle cables, then remove them from the frame.

Examination

1. Check that the throttle cables operate smoothly, without sticking or binding. Replace the cable if there is any doubt as to its correct operation.

Installation

Note:

- **The opening and closing cables must be correctly identified and fitted to the correct positions as noted prior to removal.**

1. Locate the cables to the frame following the routing noted during removal.
2. Engage the nipples of the inner cables to the twist grip.

Note:

- **Rocket III and Classic continue from step 3 to step 9. Then continue from step 12 to step 18.**
- **Rocket III Touring continue from step 10 to step 18.**

Rocket III, Classic and Roadster

3. Locate the master cylinder to the handlebars.
4. Position the clamp to the rear side of the handlebars.
5. Align the master cylinder/clamp split line with the dot mark on the underside of the handlebar.

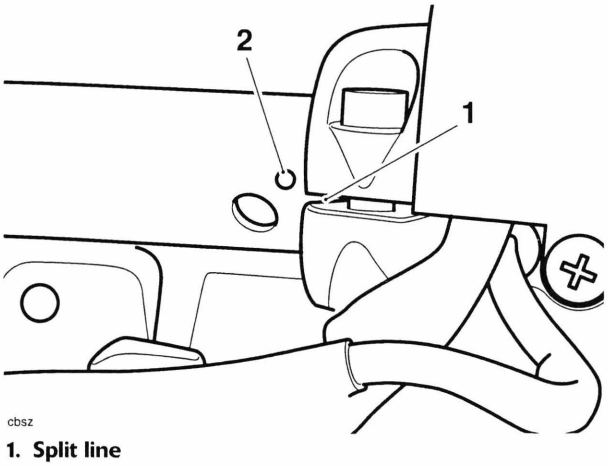

cbsz

1. Split line
2. Dot mark

6. Tighten the master cylinder clamp bolts, upper first and then the lower to **12 Nm**.
7. Assemble the switch cube to the master cylinder, tightening the two screws to **2.5 Nm**.
8. Attach the cable retainer screw and union to the master cylinder, tightening both to **2 Nm**.

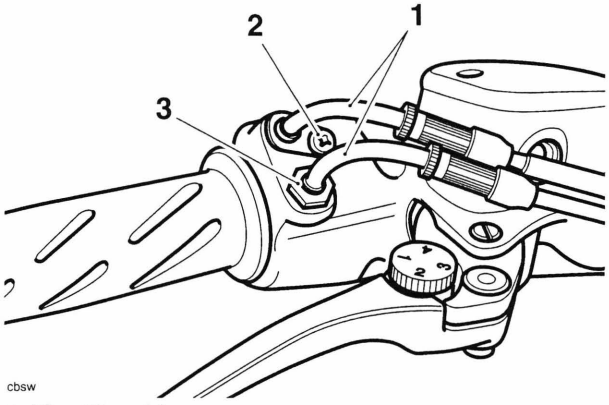

cbsw

1. Throttle cables
2. Retainer screw
3. Union

9. For Rocket III and Classic, continue from step 12.

Rocket III Touring

10. Assemble the switch cube, tightening the two screws to **2.5 Nm**.
11. Attach the cable retainer screw and union to the switch cube, tightening both to **2 Nm**.

All Models

12. Attach the other end of the inner cables to the throttle cam and locate the outer cables to the cable bracket. Ensure the opening and closing cables are located to the correct cams then fit the cable locknuts and tighten to **8 Nm**.

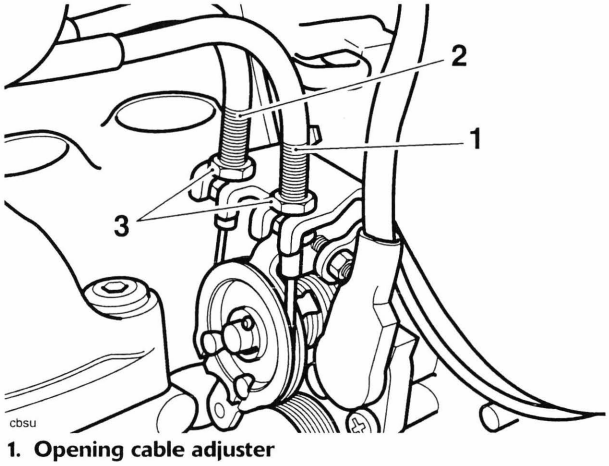

cbsu

1. Opening cable adjuster
2. Closing cable adjuster
3. Locknuts

Warning

Operation of the motorcycle with an incorrectly adjusted, incorrectly routed or damaged throttle cable could interfere with the operation of the brakes, clutch or the throttle itself. Any of these conditions could result in loss of control of the motorcycle and an accident.

Warning

Move the handlebars to left and right full lock while checking that cables and harnesses do not bind. A cable or harness that binds will restrict the steering and may cause loss of control and an accident.

13. Refit the coolant expansion tank and tighten the fixings to **4 Nm**.
14. Refit the headstock cover.
15. Support the tank, remove and stow the tank prop, then lower the tank to the frame and secure it (see page *11-123* for Rocket III, Classic and Roadster, see page *11-125* for Rocket III Touring).
16. Reconnect the battery, positive (red) lead first.
17. Refit the seat (see page *17-18* for Rocket III, Classic and Roadster, see page *17-19* for Rocket III Touring.
18. Set the cable adjustment using the adjustment instructions that follow:

Throttle cable adjustment

1. When correctly set, the throttle must have 2 - 3 mm of free play at the throttle twist grip. If there is more or less than 2 - 3 mm of free play present, the throttle cables must be adjusted.

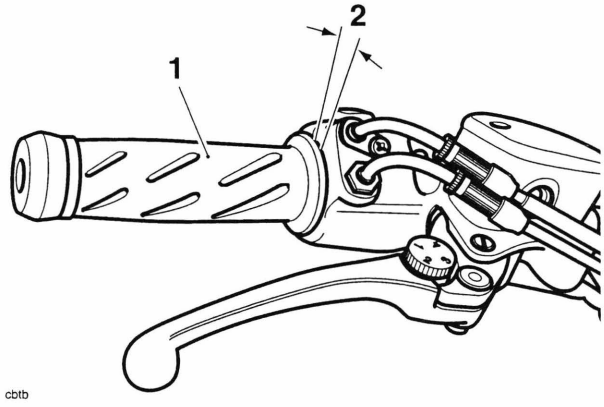

Rocket III, Classic and Roadster shown, Rocket III Touring is similar

1. Throttle twist grip
2. 2 - 3 mm

If there is an incorrect amount of free play, adjustment may be made as follows:

Warning

Use of the motorcycle with incorrectly adjusted, incorrectly routed, sticking or damaged throttle cables will interfere with the throttle function resulting in loss of motorcycle control and an accident.

To avoid incorrect adjustment, incorrect routing, or continued use of a sticking or damaged throttle, always have your throttle checked and adjusted by your authorised Triumph dealer.

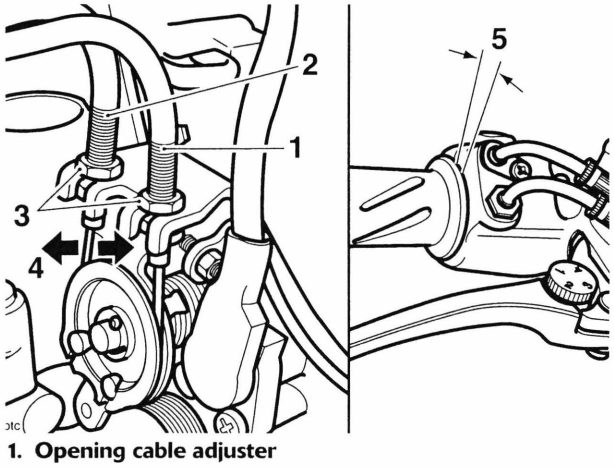

1. Opening cable adjuster
2. Closing cable adjuster
3. Locknuts
4. Closing cable - free play measurement point
5. Opening cable - free play measurement point

2. Remove the intake and headstock covers if not already removed.
3. Detach the coolant expansion tank and position aside.
4. Release the locknut on the 'opening' cable adjuster.
5. Rotate the 'opening' cable adjuster at the twist grip end such that it has an equal amount of adjustment in each direction.
6. Rotate the 'opening' cable adjuster at the throttle body end of the cable to give 2 - 3 mm of play at the twist grip. Tighten the locknut.
7. Make any minor adjustments as necessary to give 2 - 3 mm of play using the adjuster near the twist grip end of the cable. Tighten the locknut to **8 Nm**.
8. With the throttle fully closed, ensure that there is 2 -3 mm of free play in the 'closing' cable at the throttle cam attached to the throttle bodies. If necessary, adjust in the same way as the 'opening' cable until 2 - 3 mm of play is present.

Warning

Ensure that all the adjuster locknuts of both cables are tightened, as a loose locknut could result in a sticking throttle.

An incorrectly adjusted, sticking or stuck throttle can lead to loss of motorcycle control and an accident.

9. Refit the coolant expansion tank and tighten the fixings to **4 Nm**.
10. Refit the intake cover. Tighten the screws to **9 Nm**.
11. Refit the headstock covers. Tighten the screws to **3 Nm**.
12. Check that the throttle opens smoothly, without undue force and that it closes without sticking. Rectify as necessary.

Warning

Operation of the motorcycle with an incorrectly adjusted, incorrectly routed or damaged throttle cable could interfere with the operation of the brakes, clutch or the throttle itself. Any of these conditions could result in loss of control of the motorcycle and an accident.

Warning

Move the handlebars to left and right full lock while checking that cables and harnesses do not bind. A cable or harness that binds will restrict the steering and may cause loss of control and an accident.

Throttle Body Balancing - Rocket III and Classic

Note:

- **The Triumph diagnostic tool does not support the throttle balancing adjustment for Rocket III Touring. For Rocket III Roadster and Touring throttle balancing see page *11-162*.**
- **Rocket III and classic throttles cannot be balanced using equipment to measure vacuum in each throttle. Instead, the Triumph diagnostic tool must be used.**

1. Remove the intake cover (see page *11-121* for Rocket III, Classic and Roadster, see page *11-125* for Rocket III Touring) to allow access to the adjuster screws.
2. Connect the diagnostic tool, start the engine and navigate to 'ADJUSTMENTS' (see page *11-35*).
3. Select 'BALANCE THROTTLES'.

Adjust Tune Procedure

Adjust the throttle balance as described in the service manual until balanced
Press cancel to cancel the adjustment process
Press OK to finish

Throttle Status:	Throttles Balanced
Cylinder 1 MAP Pressure:	480 mmHg
Cylinder 2 MAP Pressure:	481 mmHg
Cylinder 3 MAP Pressure:	480 mmHg

◯ Adjusting parameter - Balance Throttles

Balance throttles screen

Note:

- **The balance throttle screens show the vacuum value of each throttle in mmHg. In addition, when the throttles are balanced to an acceptable range of each other, the word 'BALANCED' will appear in the top right hand corner of the screen. At this point, no further adjustment is necessary or productive.**

4. Remove the intake plenum chamber (see page *11-165*) and make adjustments until the word 'BALANCED' appears in the top right hand corner of the screen. Adjusters are located on each throttle as shown in the diagram below.

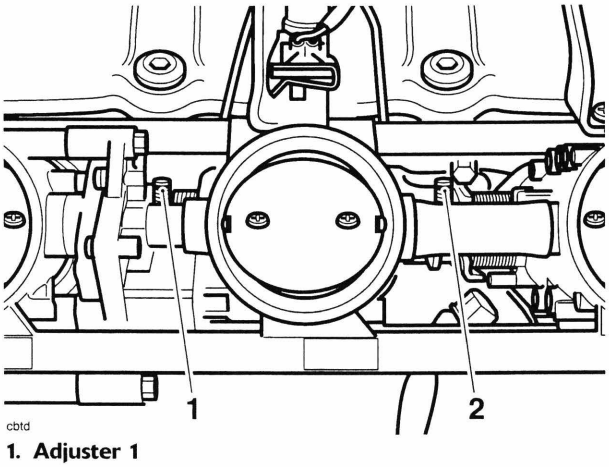

1. Adjuster 1
2. Adjuster 2

5. When balanced, stop the engine, disconnect the diagnostic tool and refit the intake plenum chamber (see page *11-168*).
6. Refit the intake cover (see page *11-123* for Rocket III, Classic and Roadster, see page *11-126* for Rocket III Touring).

Throttle Body Balancing - Rocket III Roadster and Touring

Note:

- **The Rocket III Roadster and Touring throttles cannot be balanced using the Triumph diagnostic tool. Instead, Triumph recommend the use of the Souriau Indiana digital inlet vacuum analyser or similar device.**

1. Raise and support the fuel tank (see page *11-125*).
2. Reconnect the electrical connector to the instrument assembly and secure the instrument assembly to the fuel tank.

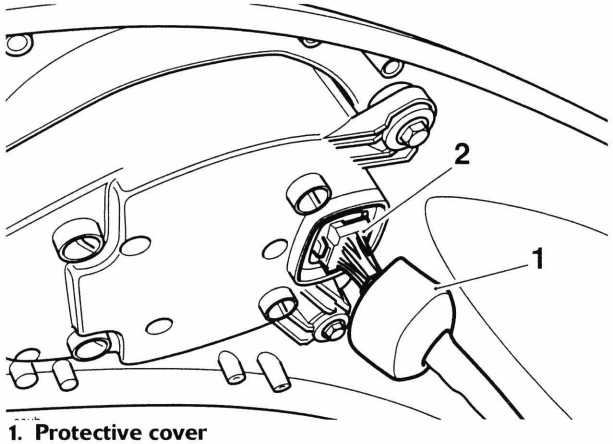

1. Protective cover
2. Electrical connector

3. Disconnect the manifold absolute pressure (MAP) sensor electrical connector.

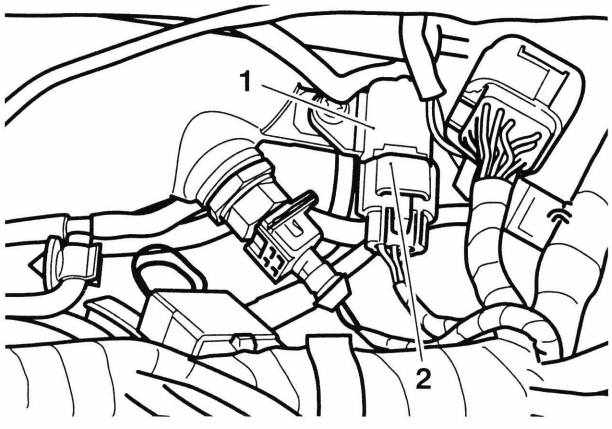

1. MAP sensor
2. Electrical connector

4. Disconnect the MAP sensor hoses at the T-piece indicated in the illustration below.

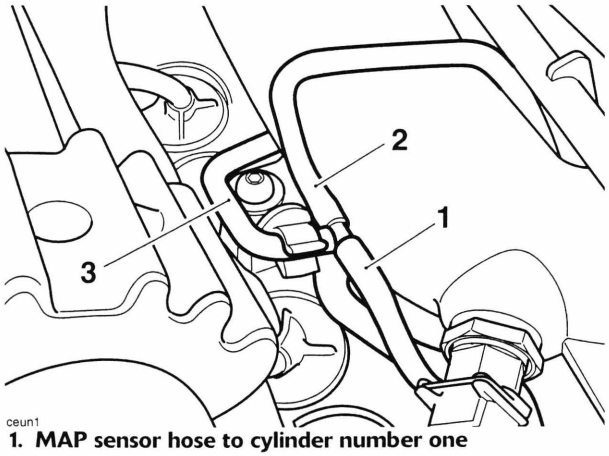

ceun1

1. MAP sensor hose to cylinder number one
2. MAP sensor hose to cylinder number two
3. MAP sensor hose to cylinder number three

5. Position the analyser in a location that allow it to be easily read.

- **The hose connections on the tool are marked 1, 2, 3, etc. denoting which cylinder they should be connected to. When connecting the hoses to the throttles, ensure that hose 1 is connected to MAP sensor hose for cylinder number one etc. Cylinder number one is on the front of the engine.**

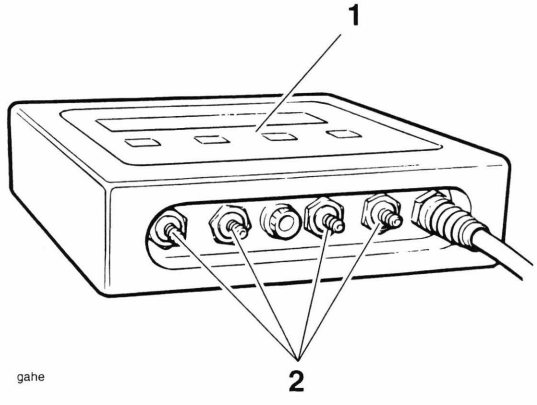

gahe

1. Analyser marking
2. Throttle body connections

6. Using suitable short tubes as adapters, attach the analyser hoses to the relevant MAP hoses.

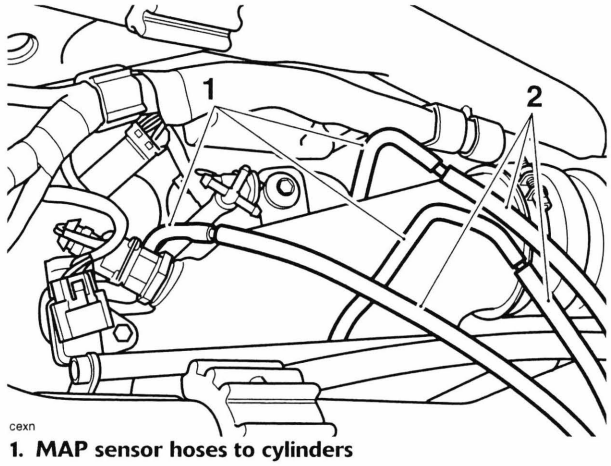

cexn

1. MAP sensor hoses to cylinders
2. Analyser hoses

7. Ensure that the MAP sensor electrical connector is disconnected and start the engine.
8. Select the bar chart display on the analyser and assess which cylinders require adjustment.

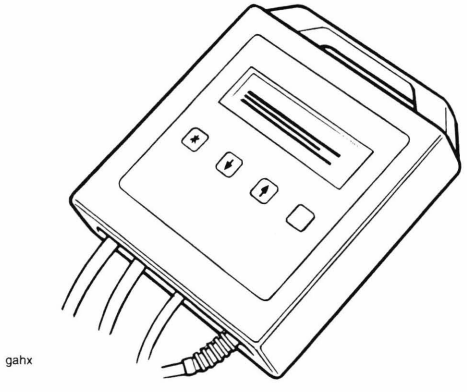

gahx

Typical display of unbalanced throttles

9. Stop the engine.

Note:

- **If the throttle balance does not require adjustment, continue from step 15.**

10. To adjust the throttle bodies balance, detach the intake duct and position to one side.

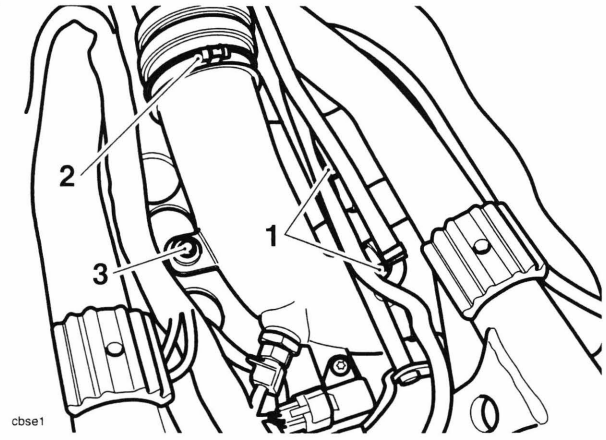

cbse1

1. Intake duct to plenum clips
2. Intake hose clip
3. Fixing

11. Start the engine.

Note:

- **The rear adjuster will adjust cylinder 3 to cylinder 2.**
  The front adjuster will adjust cylinders 2 and 3 to cylinder 1.

12. Set the adjusters such that all three cylinders have equal vacuum readings.

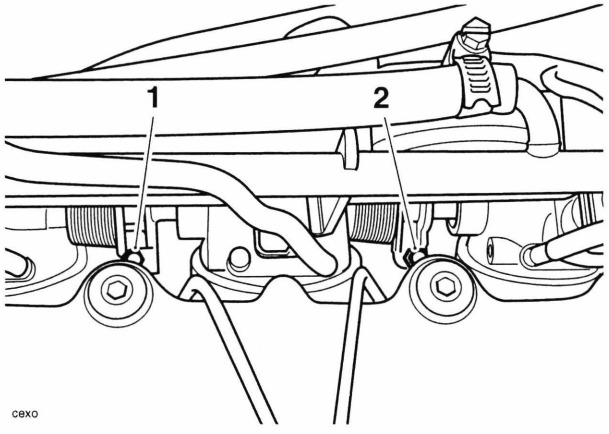

cexo

1. Rear adjuster
2. Front adjuster

13. Stop the engine.

> **⚠ Caution**
>
> Ensure the intake duct is positively located to the plenum and intake hose and is retained by the clips through their full circumference. Rectify if necessary as poor engine performance and engine damage may result from poor intake duct/plenum sealing.

14. Refit the intake duct and tighten the fixing to **9 Nm**. Tighten the intake hose clip and the two clips securing the intake plenum to the intake duct.

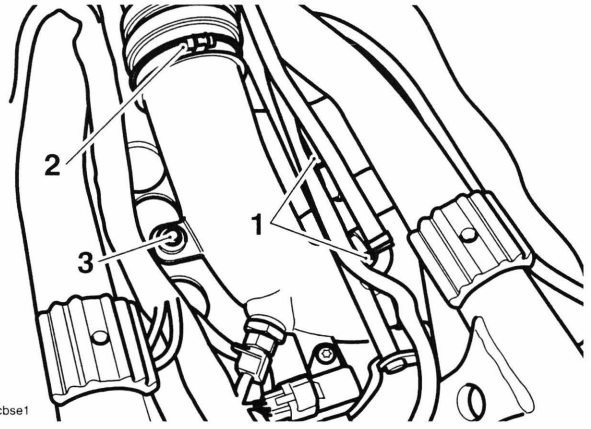

cbse1

1. Intake plenum clips
2. Intake hose clip
3. Fixing

15. Detach the analyser hoses and short tube adapters from the MAP sensor hoses.
16. Reconnect the MAP sensor hoses to the T-piece.

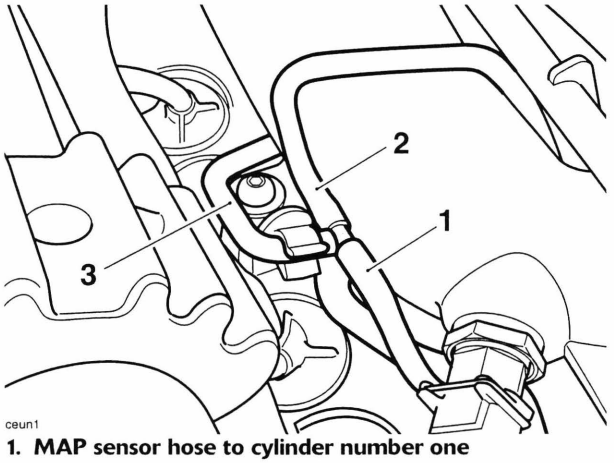

ceun1

1. MAP sensor hose to cylinder number one
2. MAP sensor hose to cylinder number two
3. MAP sensor hose to cylinder number three

17. Reconnect the MAP sensor electrical connector.

18. Detach the instrument assembly from the fuel tank and disconnect the electrical connector.

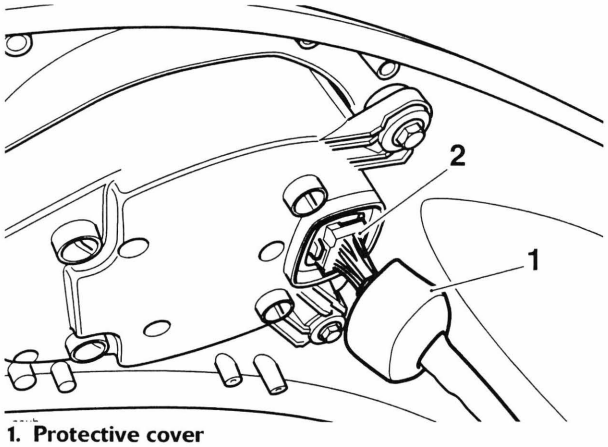

1. Protective cover
2. Electrical connector

19. Lower and secure the fuel tank (see page *11-126*).
20. Start the engine and check that the engine idle speed is 850 rpm.

Throttle Body

Removal

1. Remove the seat (see page *17-18* for Rocket III, Classic and Roadster, see page *17-19* for Rocket III Touring).
2. Disconnect the battery, negative (black) lead first.
3. Remove the fuel tank (see page *11-123* for Rocket III, Classic and Roadster, see page *11-126* for Rocket III Touring).
4. Noting their orientation, release the three clips securing the intake plenum to the throttle bodies.

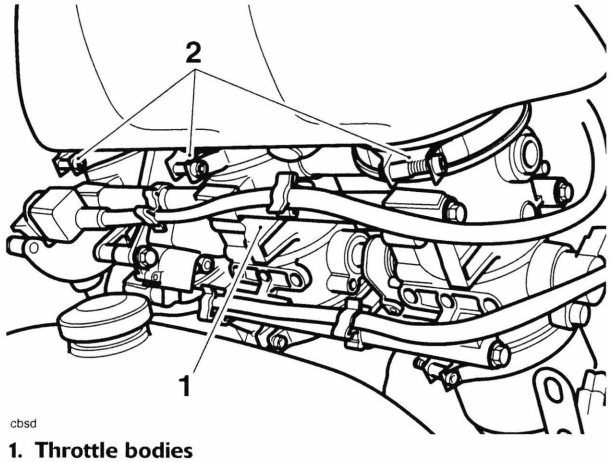

cbsd

1. Throttle bodies
2. Clips

5. Release the two clips securing the intake plenum to the intake duct.

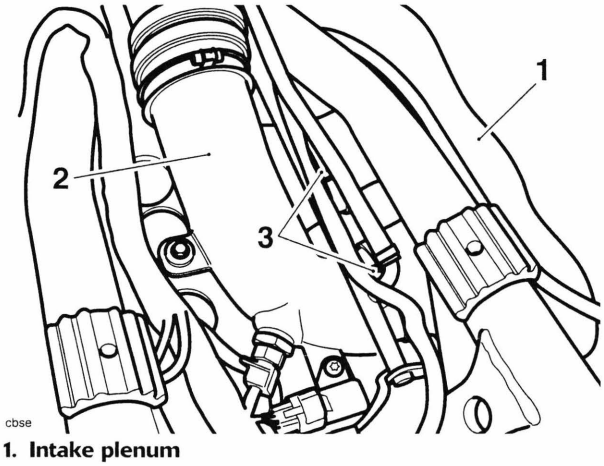

cbse

1. Intake plenum
2. Intake duct
3. Clips

6. Release the two screws securing the intake plenum to the throttle bodies.

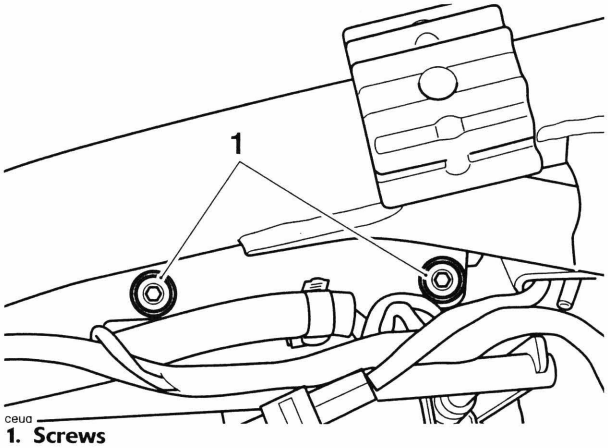

1. Screws

7. Carefully detach the intake plenum from the throttle bodies and intake duct. Place the intake plenum aside.
8. Noting its orientation, release the clip securing the intake hose to the intake duct.

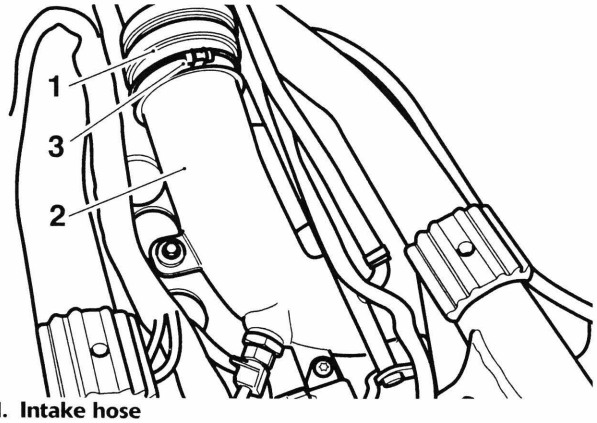

1. Intake hose
2. Intake duct
3. Clip

9. Disconnect the MAP sensor hoses indicated in the illustration below.

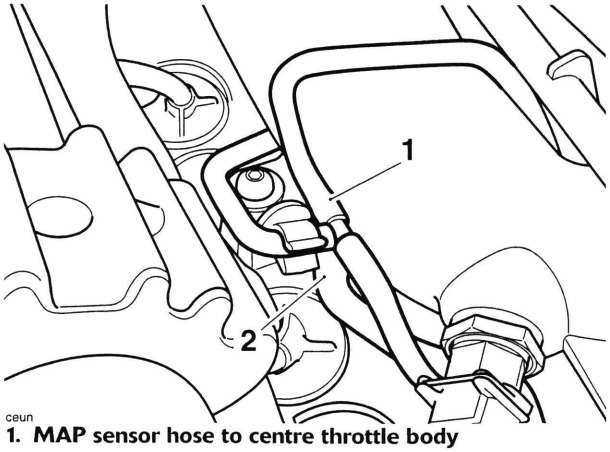

1. MAP sensor hose to centre throttle body
2. MAP sensor hose to sensor

10. Disconnect the manifold absolute pressure (MAP) and air temperature sensors from the wiring harness.

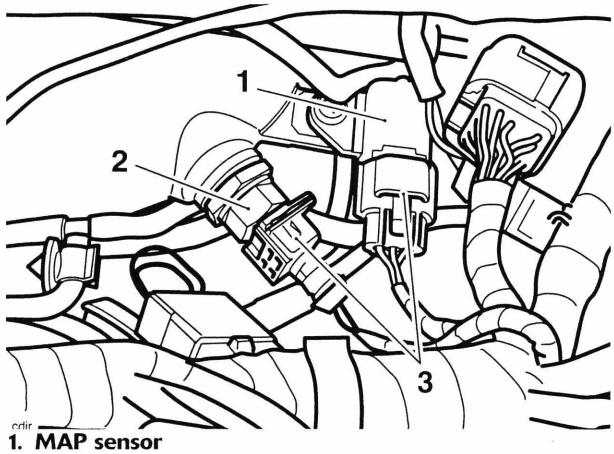

1. MAP sensor
2. Air temperature sensor
3. Connectors

11. Release the fixing securing the intake duct to its bracket. Remove the duct.

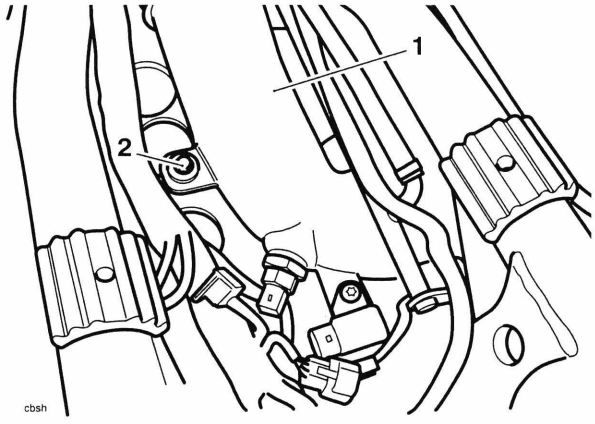

1. Intake duct
2. Fixing

12. If fitted, disconnect the small diameter evaporative system return tubes from the base of each throttle.
13. Disconnect the throttle cables from the throttle linkage (see page *11-156*).
14. Disconnect the electrical multi-plugs from:
    - both of the throttle position sensors;
    - the idle speed control stepper motor;
    - the injectors.
15. Detach the MAP sensor hoses from the four-way connector above the camshaft cover.
16. Release the two fixings securing the throttle bodies to the transition piece brackets.

17. Release the clips securing the throttle bodies to the transition pieces.

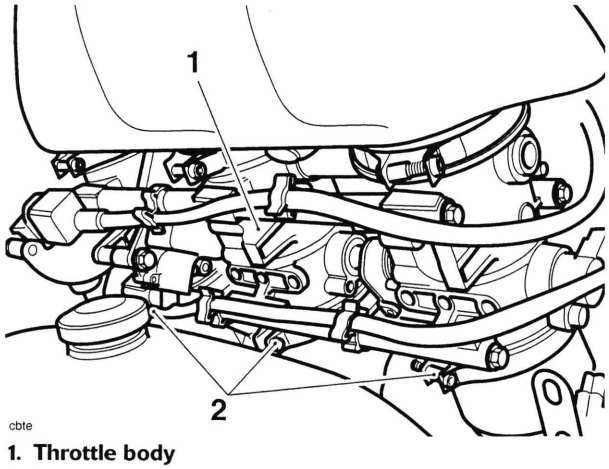

cbte

1. Throttle body
2. Clips

18. Raise the throttle bodies from the transition pieces and, feeding the fuel hose and wiring past the frame etc. detach the throttle bodies from the engine. Disconnect the electrical multi-plug from the second throttle stepper and remove the throttle bodies from the engine.
19. Remove the screws securing each transition piece to the cylinder head.
20. Remove the transition pieces and discard the O-ring seals.

Note:

- **Collect the throttle body brackets from the transition pieces for throttles 1 and 3.**

21. Cover the inlet ports to prevent the ingress of dirt and other objects.

Installation

1. Remove the covers from the inlet ports and ensure that the mating faces are clean.
2. Locate new O-ring seals to the transition pieces.

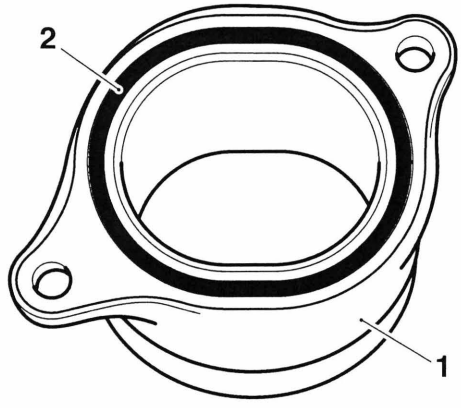

ccam

1. Transition piece
2. O-ring

3. Position each transition piece to the cylinder head, together with the brackets on cylinders 1 and 3. Tighten the screws to **12 Nm**.
4. Refit the second throttle stepper electrical multi-plug and position the throttle body assembly to the transition pieces, feeding the MAP sensor hoses, fuel hoses and sensor/motor cables through the frame. Push each throttle body into its respective transition piece. Ensure that each throttle body is fully seated.
5. Tighten the throttle body clips, with the screw heads all facing rearwards, to **1.5 Nm**.

Note:

- **Ensure the throttles seat correctly in the transition pieces and seal each throttle through 360 degrees.**

6. Fit the throttle body to transition piece bracket fixings, tightening them to **6 Nm**.
7. On California models, reconnect the evaporative return hoses to each throttle body.
8. Connect the multi-plugs to:
    - both of the throttle position sensors.
    - the idle speed control stepper motor.
    - each injector.
9. Connect and adjust the throttle cables (see page *11-159*).

Warning

Ensure that all the adjuster locknuts of both cables are correctly seated and tightened as a sticking throttle could result from a loose locknut.

An incorrectly adjusted, sticking or stuck throttle will lead to loss of motorcycle control and an accident.

Warning

Operation of the motorcycle with an incorrectly adjusted, incorrectly routed or damaged throttle cable could interfere with the operation of the brakes, clutch or the throttle itself. Any of these conditions could result in loss of control of the motorcycle and an accident.

Warning

Move the handlebars to left and right full lock while checking that cables and harnesses do not bind. A cable or harness that binds will restrict the steering and may cause loss of control and an accident.

10. Feed the MAP sensor hoses back to the four-way connector and reconnect them.
11. Position the intake plenum to the throttle bodies. Fit and tighten the screws to **6 Nm**.

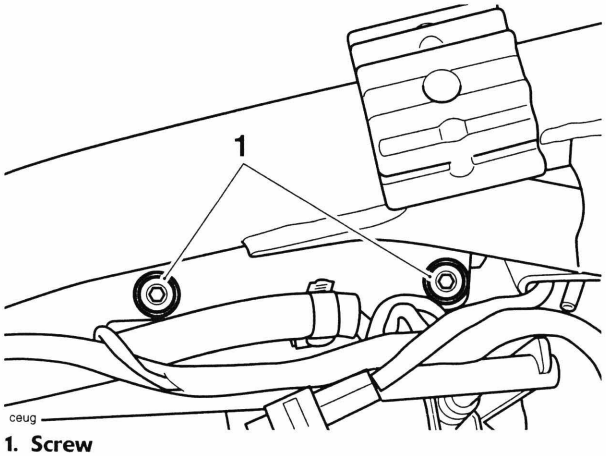

1. Screw

12. Position the intake duct to its bracket, the intake hose and the intake plenum. Secure the in take hose with its clip. Tighten the duct fixing to **9 Nm**.

Caution

Ensure the hose is positively located to the duct and is retained by the clip through its full circumference. Rectify if necessary as poor engine performance and engine damage may result from poor hose sealing.

13. Tighten the three clips to the throttle bodies.

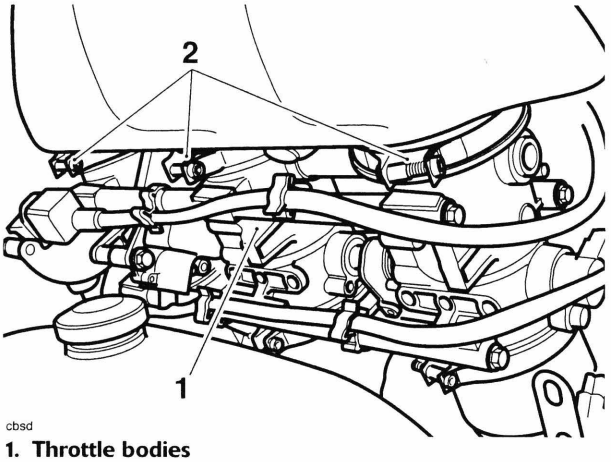

1. Throttle bodies
2. Clips

14. Position the intake duct to its bracket and also to the intake hose. Secure the intake hose with its clip.

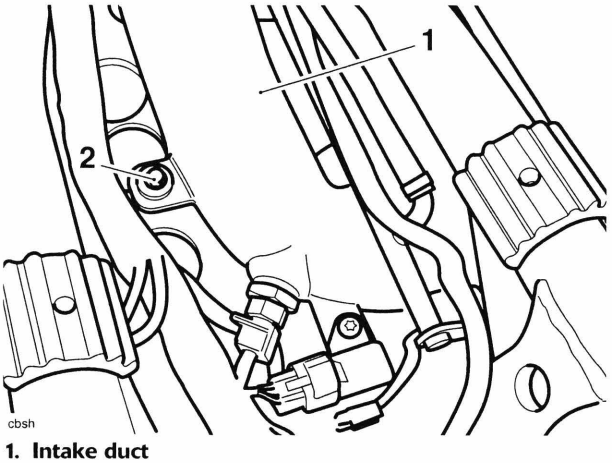

1. Intake duct
2. Fixing

Caution

Ensure the hose is positively located to the duct and is retained by the clip through its full circumference. Rectify if necessary as poor engine performance and damage may result from poor hose sealing.

15. Refit the intake plenum to the throttle bodies and intake duct. Tighten all hose clips.

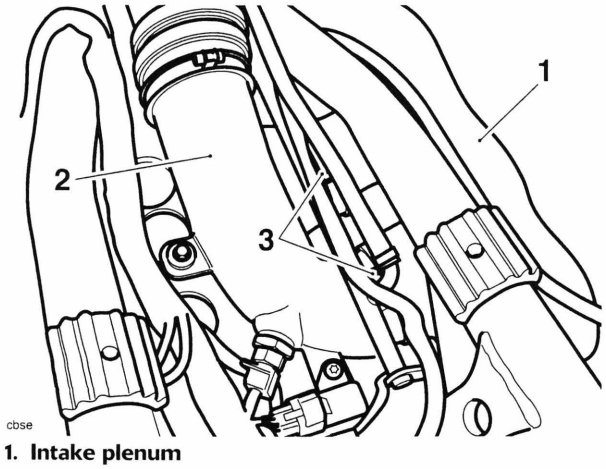

cbse

1. Intake plenum
2. Intake duct
3. Clips

16. Reconnect the MAP sensor hoses.

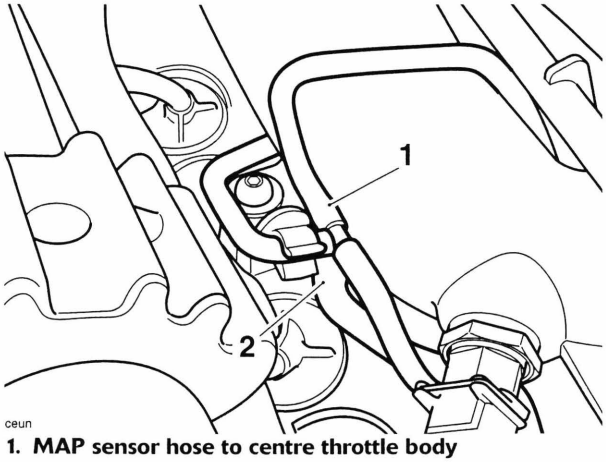

ceun

1. MAP sensor hose to centre throttle body
2. MAP sensor hose to sensor

17. Reconnect the MAP and air temperature sensor connections.

⚠ Caution

Ensure the plenum is positively located to the throttle bodies and intake duct and is retained by the clips through their full circumference. Rectify if necessary as poor engine performance and damage may result from poor plenum/duct sealing.

18. Refit the fuel tank (see page *11-124* for Rocket III, Classic and Roadster, see page *11-127* for Rocket III Touring).
19. Refit the intake cover (see page *11-123* for Rocket III, Classic and Roadster, see page *11-126* for Rocket III Touring).
20. Reconnect the battery, positive (red) lead first.
21. Refit the seat (see page *17-18* for Rocket III, Classic and Roadster, see page *17-19* for Rocket III Touring).

Injectors and Fuel Rail

Removal

1. Remove the seat (see page *17-18* for Rocket III, Classic and Roadster, see page *17-19* for Rocket III Touring).
2. Disconnect the battery, negative (black) lead first.
3. Remove the throttle bodies (see page *11-165*).
4. Remove the three screws securing the fuel rail and fuel hose to the throttle body assembly.

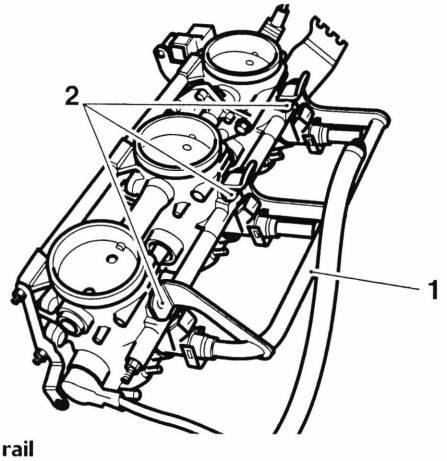

cbtf

1. Fuel rail
2. Screws

Note:

- **The fuel rail and injectors are removed from the throttle bodies together.**

5. Gently ease the fuel rail and injectors upwards to release them from the throttles.

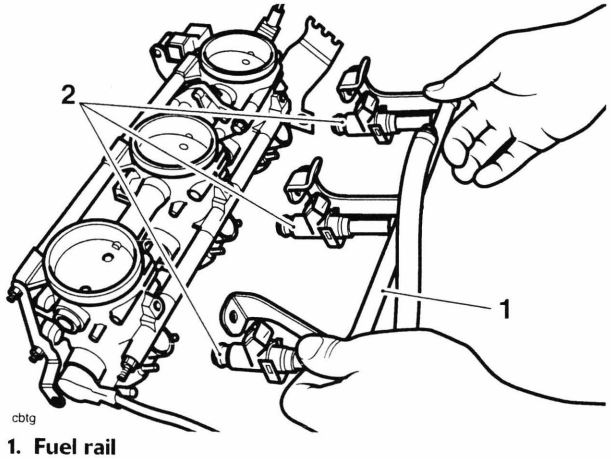

cbtg

1. Fuel rail
2. Injectors

6. Ease the clips from the top of each injector.

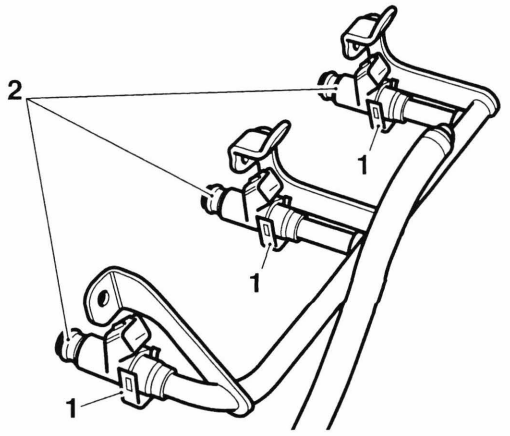

cbth

1. Clips
2. Injectors

7. Ease each injector from the fuel rail.
8. Recover the upper and lower O-rings from each injector.

Assembly/installation

1. Fit new O-rings to each injector.
2. Locate each injector to the fuel rail
3. Fit the injector/fuel rail assembly to the throttle body, orientating each injector such that the electrical connection is facing upwards (towards the second butterfly).
4. Retain each injector with the clips removed earlier.
5. Fit and tighten the fuel rail screws to **5 Nm**.
6. Refit the throttle bodies (see page *11-167*).
7. Reconnect the battery positive (red) lead first.
8. Refit the seat (see page *17-18* for Rocket III, Classic and Roadster, see page *17-19* for Rocket III Touring).

Primary Throttle Potentiometer

Note:

- **The primary and secondary throttle position sensors are different and must never be transposed. For ease of identification, the primary throttle position sensor has a shorter connector cable than the secondary.**

Removal

9. Remove the seat (see page *17-18* for Rocket III and Classic, see page *17-19* for Rocket III Touring).
10. Disconnect the battery, negative (black) lead first.
11. Remove the throttle bodies (see page *11-165*).
12. Remove the Torx screw securing the primary throttle position sensor to the throttle body.

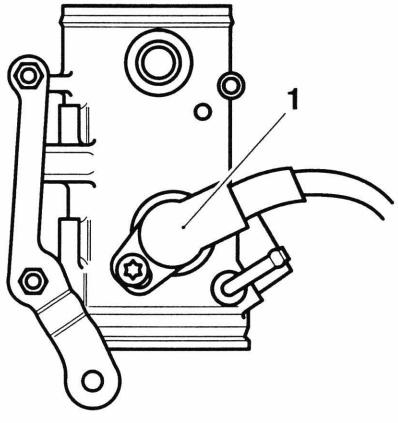

cbti

1. Primary throttle position sensor

13. Turn the sensor anti clockwise and detach it from the throttle body by gently pulling outwards.

Installation

1. Lubricate the sensor O-ring with a smear of petroleum jelly.
2. Insert the sensor to the throttle body at the angle shown below then turn it anti clockwise until the screw hole aligns with the thread in the throttle body.

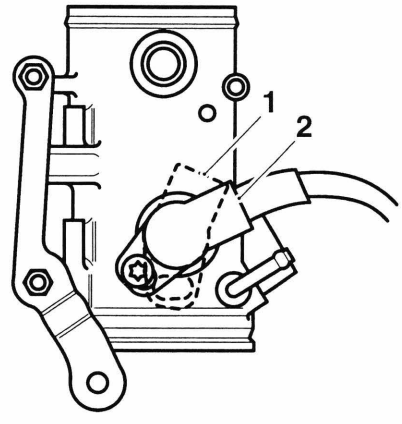

ccav

1. Sensor insertion position (dotted line)
2. Sensor initial fitted position (solid line)

3. Insert the Torx screw to secure the throttle potentiometer, but do not fully tighten the screw yet.
4. Refit the throttle bodies (see page *11-167*).
5. Temporarily reconnect the battery, positive (red) lead first.
6. Attach the Triumph diagnostic tool to the dedicated plug, refer to the Triumph Diagnostic Tool User Guide.
7. Turn the ignition to the 'ON' position.
8. On the diagnostic software navigate to and select the 'ADJUST TUNE' option.
9. At the next screen, select Throttle Position Sensor Adjust then click the 'Adjust' button.

10. On pressing the adjust button, the diagnostic tool will send a command, which drives the primary throttle to the fully closed position. The tool will also display the voltage reading coming from the throttle position sensor.

Adjust Tune Procedure

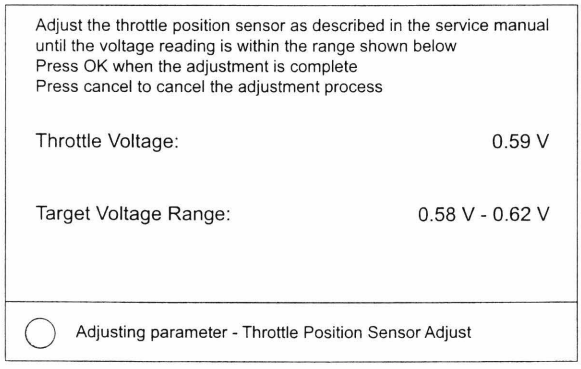

Adjust Tune Screen

Gently rotate the new throttle position sensor until the voltage reading on the software
shows 0.6 Volts +/- 0.02 Volts. The reading on the screen will turn green, indicating that the reading is correct.

Note:

- **This is a setting Voltage only. Because of the adaptive nature of the engine management system, in-service Voltage may vary from this setting figure.**

11. Tighten the sensor retaining screw to **3.5 Nm** and re-check the Voltage reading shown on the tool. Repeat the adjustment if the reading is outside the specified range.
12. Click the OK button to return the throttle to normal control and return the diagnostic tool to the ADJUST TUNE menu.
13. Disconnect the diagnostic tool.
14. Disconnect the battery negative (black) lead first.
15. Check that the throttle opens and closes without obstruction/sticking and has a smooth action throughout the full range of its movement. Rectify as necessary.

⚠ Warning

Operation of the motorcycle with an incorrectly adjusted throttle position sensor, or a throttle position sensor that causes the throttle to stick could result in loss of throttle control. Loss of throttle control could result in loss of control of the motorcycle and an accident.

⚠ Warning

Operation of the motorcycle with an incorrectly adjusted, incorrectly routed or damaged throttle cable could interfere with the operation of the brakes, clutch or the throttle itself. Any of these conditions could result in loss of control of the motorcycle and an accident.

⚠ Warning

Move the handlebars to left and right full lock while checking that cables and harnesses do not bind. A cable or harness that binds will restrict the steering and may cause loss of control and an accident.

16. Support the tank, remove and stow the tank prop then lower the tank to the frame and secure it (see page *11-123* for Rocket III and Classic, see page *11-126* for Rocket III Touring).
17. Refit the intake cover (see page *11-123* for Rocket III and Classic, see page *11-126* for Rocket III Touring).
18. Reconnect the battery, positive (red) lead first.
19. Refit the seat (see page *17-18* for Rocket III and Classic, see page *17-19* for Rocket III Touring).

Secondary Throttle Potentiometer

Note:

- **The primary and secondary throttle position sensors are different and must never be transposed. For ease of identification, the primary throttle position sensor has a shorter connector cable than the secondary.**

Removal

1. Remove the seat (see page *17-18* for Rocket III, Classic and Roadster, see page *17-19* for Rocket III Touring).
2. Disconnect the battery, negative (black) lead first.
3. Remove the throttle bodies (see page *11-165*).
4. Remove the Torx screw securing the secondary throttle position sensor to the throttle body.

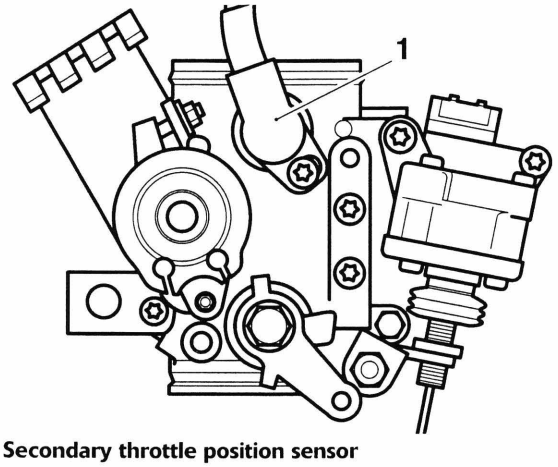

cbtj

1. Secondary throttle position sensor

5. Turn the sensor clockwise and detach it from the throttle body by gently pulling outwards.

Installation

1. Lubricate the sensor O-ring with a smear of petroleum jelly.
2. Manually push the second throttle to the fully open position.
3. With the second throttle still held in the fully open position, insert the sensor to the throttle body at the angle shown below then turn it clockwise until the screw hole aligns with the thread in the throttle body.

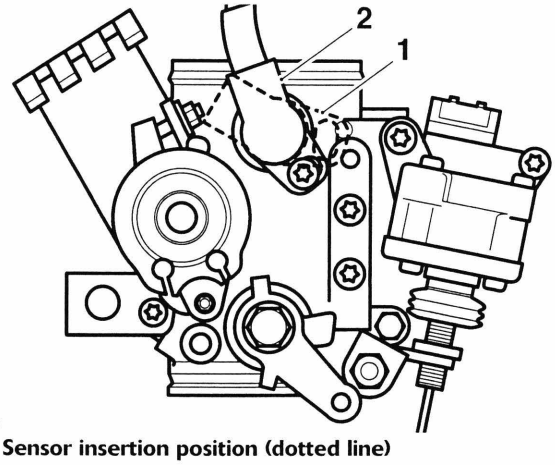

ccal

1. Sensor insertion position (dotted line)

2. Sensor initial fitted position (solid line)

4. Insert the Torx screw but do not fully tighten yet.
5. Release the second throttle.
6. Refit the throttle bodies (see page *11-167*).
7. Temporarily reconnect the battery, positive (red) lead first.
8. Turn the ignition to the ON position, which will close the second throttle.
9. On the diagnostic software navigate to and select the 'Sensor Data' option.
10. The screen will now display the 'Sensor Voltage' screen and the Second Throttle Position Sensor Voltage.
11. Gently rotate the new throttle position sensor until the voltage reading on the tool shows 0.6 volts +/- 0.02 volts.

Sensor Data		
Sensor Voltages	Description	Value
	Second Throttle Position Sensor Voltage	0.60 V

12. Tighten the sensor retaining screw to **3.5 Nm** and recheck the voltage reading shown on the tool. Repeat the adjustment if the reading is outside the specified range.
13. Disconnect the diagnostic tool.
14. Disconnect the battery, negative (black) lead first.

15. Check that the throttle opens and closes without obstruction/sticking and has a smooth action throughout the full range of its movement. Rectify as necessary.

Warning

Operation of the motorcycle with an incorrectly adjusted throttle position sensor, or a throttle position sensor that causes the throttle to stick could result in loss of throttle control. Loss of throttle control could result in loss of control of the motorcycle and an accident.

Warning

Operation of the motorcycle with an incorrectly adjusted, incorrectly routed or damaged throttle cable could interfere with the operation of the brakes, clutch or the throttle itself. Any of these conditions could result in loss of control of the motorcycle and an accident.

Warning

Move the handlebars to left and right full lock while checking that cables and harnesses do not bind. A cable or harness that binds will restrict the steering and may cause loss of control and an accident.

16. Support the tank, remove and stow the tank prop, then lower the tank to the frame and secure it (see page *11-123* for Rocket III, Classic and Roadster, see page *11-126* for Rocket III Touring).
17. Refit the intake cover (see page *11-123* for Rocket III, Classic and Roadster, see page *11-126* for Rocket III Touring).
18. Reconnect the battery, positive (red) lead first.
19. Refit the seat (see page *17-18* for Rocket III, Classic and Roadster, see page *17-19* for Rocket III Touring).

Idle Speed Control Stepper Motor

Removal

1. Remove the seat (see page *17-18* for Rocket III, Classic and Roadster, see page *17-19* for Rocket III Touring).
2. Disconnect the battery, negative (black) lead first.
3. Remove the throttle bodies (see page *11-165*).
4. Remove the nut, metal washer and plastic washer attaching the idle control stepper arm to the idle speed control lever.

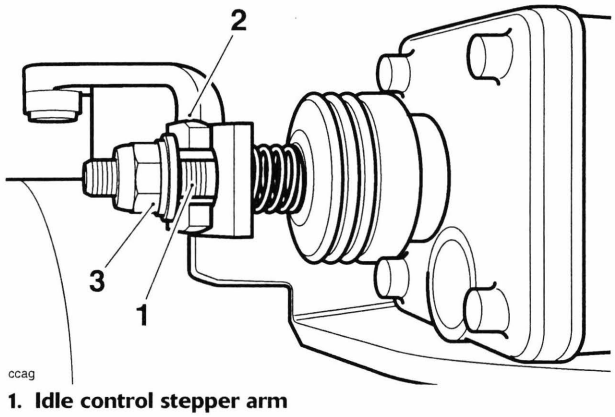

ccag

1. Idle control stepper arm
2. Idle speed control lever
3. Nut, etc.

5. Using the linkage, rather than the butterfly plates, fully open the primary throttle by hand.
6. Turn the idle speed control lever away from the stepper arm and remove the plastic collar and spring.

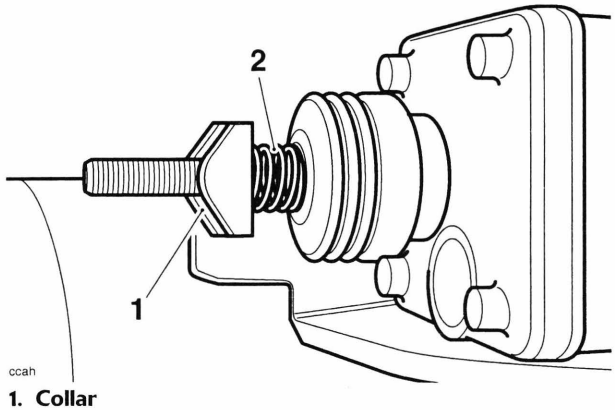

ccah

1. Collar
2. Spring

7. Remove the two screws securing the idle speed control stepper motor to its bracket, then remove the stepper motor.

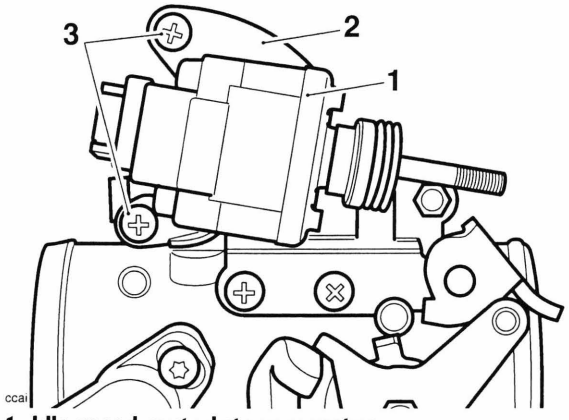

ccai

1. Idle speed control stepper motor
2. Bracket
3. Fixings

Installation

1. Turn the idle speed control lever until the stepper motor can be fitted without obstruction of any kind.
2. Locate the stepper motor to its bracket and tighten the fixings to **3.5 Nm**.
3. Locate the spring and plastic collar.

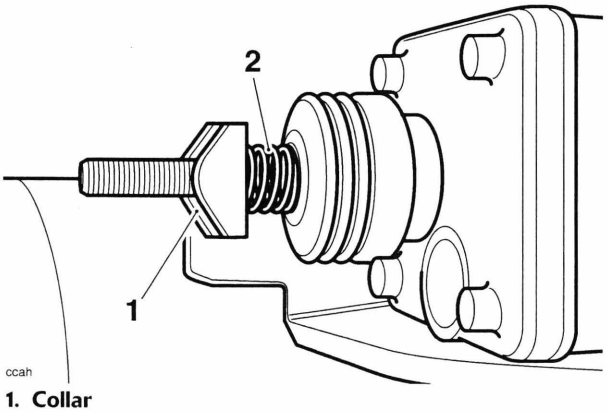

ccah

1. Collar
2. Spring

4. Fit the plastic washer through the lever then fit the metal washer and nut.
5. Refit the throttle bodies (see page *11-167*), but do not fit the intake cover.
6. Temporarily reconnect the battery, positive (red) lead first.
7. Turn the ignition to the ON position.
8. Attach the Triumph diagnostic tool to the dedicated plug, refer to the Triumph Diagnostic Tool User Guide.
9. Turn the ignition to the 'ON' position.
10. On the diagnostic tool navigate to 'Engine Diagnostics' and select the 'Adjust Tune' button.
11. Select 'Idle Speed Control Stepper Renew' then press the 'Adjust' button.
12. On pressing the 'Adjust' key, the diagnostic tool will send a command that drives the throttle to the fully closed position. The tool will also display the voltage reading coming from the throttle position sensor which should be between the target voltage range of 0.58 V and 0.62 V.

Adjust Tune Procedure

Adjust the throttle position sensor as described in the service manual until the voltage reading is within the range shown below
Press OK when the adjustment is complete
Press cancel to cancel the adjustment process

Throttle Voltage:	0.59 V
Target Voltage Range:	0.58 V - 0.62 V

Adjusting parameter - Throttle Position Sensor Adjust

Adjust Tune Screen

13. Tighten the stepper arm nut until a clearance of 0.5 mm can be measured between the idle speed control cam and the throttle roller (see the diagram below).

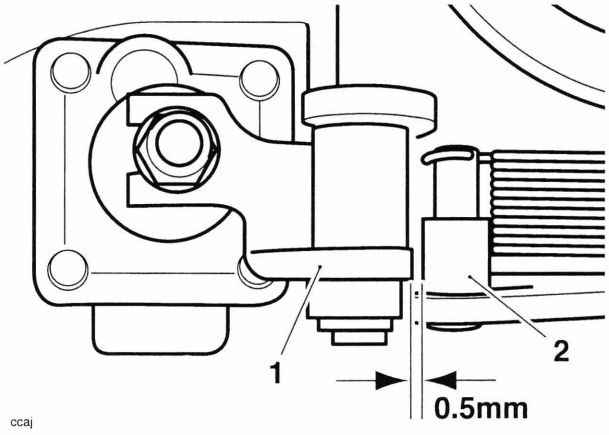

ccaj

1. Idle speed control cam
2. Throttle roller

14. Check the voltage reading shown on the software. If the reading is between the target voltage range, then proceed to step 17. If the reading is not within this range, adjustment must be made as described in steps 14 to 16.

15. Slacken the retaining screw on the primary throttle position sensor.

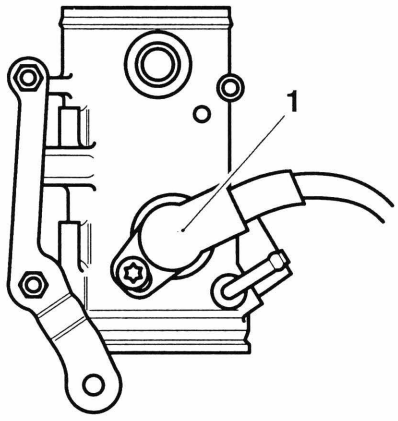

cbti

1. Primary throttle position sensor

16. Gently turn the primary throttle position sensor until the voltage reading shown on the software is between the target voltage range.
17. Tighten the sensor retaining screws to **3.5 Nm** and recheck the voltage reading shown on the software. Repeat the adjustment if the reading is outside the specified range
18. Click the 'OK' button to progress to the next adjustment.

Note:

- **The diagnostic software will calculate the target voltage range for when the throttle is in the fully open position.**

19. On pressing the 'OK' button, the diagnostic tool will send a command that drives the throttle to the fully open position. The tool will also display the voltage reading coming from the throttle position sensor which should be between the target voltage range calculated by the software and shown on the screen.
20. With the stepper fully opened, check the voltage shown on the software and, if necessary, adjust the nut on the top of the stepper arm until the software shows a voltage within the target voltage range shown on the screen. The reading on the screen will change from red to green, indicating that the reading is correct.

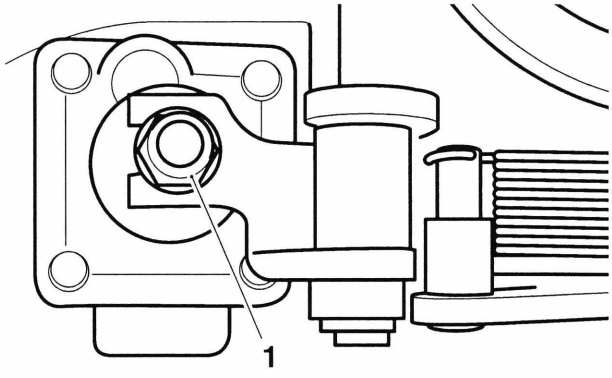

ccak

1. Adjustment nut

21. Click the 'OK' button to fully close the idle speed control stepper motor. After a minimum of 15 seconds (the tool will show 'Adapting' and not allow further actions to take place during this period), click the 'OK' button again to return the ECM to normal control.

⚠ Caution

Do not operate the throttle while the stepper motor is being adjusted, otherwise the incorrect value will be adapted and the engine will not start.

22. Turn the ignition to the OFF position.
23. Disconnect the battery, negative (black) lead first.
24. Check and adjust the throttle cable settings (see page *11-160*).

Warning

Operation of the motorcycle with an incorrectly adjusted throttle position sensor, or a throttle position sensor that causes the throttle to stick could result in loss of throttle control. Loss of throttle control could result in loss of control of the motorcycle and an accident.

Warning

Operation of the motorcycle with an incorrectly adjusted, incorrectly routed or damaged throttle cable could interfere with the operation of the brakes, clutch or the throttle itself. Any of these conditions could result in loss of control of the motorcycle and an accident.

Warning

Move the handlebars to left and right full lock while checking that cables and harnesses do not bind. A cable or harness which binds will restrict the steering and may cause loss of control and an accident.

25. Support the tank, remove and stow the tank prop, then lower the tank to the frame and secure it (see page *11-123* for Rocket III, Classic and Roadster, see page *11-126* for Rocket III Touring).
26. Refit the intake cover (see page *11-123* for Rocket III, Classic and Roadster, see page *11-126* for Rocket III Touring).
27. Reconnect the battery, positive (red) lead first.
28. Refit the seat (see page *17-18* for Rocket III, Classic and Roadster, see page *17-19* for Rocket III Touring).

Engine Management Adaption

General Information

The engine management system fitted to this model is adaptive. This means that the system is able to learn about new or changing operating conditions and continuously adapt itself without needing to constantly make major adjustments from a fixed baseline setting.

Adaptive changes can become necessary because of changing rider behaviour, changes in the region in which the bike is operated (i.e. operation at high altitude where it was previously used at sea level) or because a new part may have been fitted which has slightly different characteristics to the old part. All adaptive changes are automatic and require no intervention by rider or dealer.

Adaption Status

To see if a motorcycle has fully adapted, a facility named 'ADAPTION STATUS' is provided on the diagnostic software. The following adaption details can be examined:

Function Examined	Report Method
Closed throttle position reference status	adapted/not adapted
Idle speed control adaption status	%
Oxygen sensor adaption status (off idle)	%
Oxygen sensor adaption range (off idle)	%
Oxygen sensor adaption status (idle)	%
Oxygen sensor adaption range (idle)	%

Terminology

Where the term 'status' is used, this indicates how far the present operating parameter is from the stored (baseline) value. The nearer these figures are to zero the better as it indicates the motorcycle has adapted to its current operating conditions.

The term 'range' indicates how much (in percentage terms) of the adjustment range has been used to reach the current operating status.

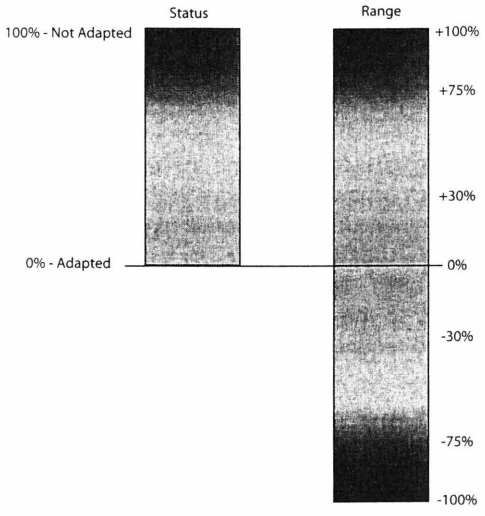

Typical Values

In a correctly adapted motorcycle, the following will be typical:

Function Examined	Read Out
Closed throttle position reference status	Yes (Adapted)
Idle speed control adaption status	Between +100 and -100%
Oxygen sensor adaption status (off idle)	0% +/- 10%
Oxygen sensor adaption range (off idle)	Between +100 and -100%
Oxygen sensor adaption status (idle)	0% +/- 10%
Oxygen sensor adaption range (idle)	Between +100 and -100%

Forcing adaption to take place

If the read out indicates that the motorcycle is not adapted, the following will force the system to make adaptions:

Warning

Never start the engine or let it run for any length of time in a closed area. The exhaust fumes are poisonous and may cause loss of consciousness and death within a short time. Always operate the motorcycle in the open-air or in an area with adequate ventilation.

1. Ensure the engine is cold.
2. WITHOUT TOUCHING THE THROTTLE, start the engine and allow it to warm up until the cooling fan comes on.
3. Leave the engine to idle for a further 12 minutes.

Note:

- **As an alternative to the above process, connect the diagnostic tool, select ADJUST TUNE (see the Triumph Diagnostic Tool User Guide) and select RESET ADAPTIONS. This will force a fast adaption routine to take place in around 5 seconds. For this to happen, the engine MUST be running, it must be at normal operating temperature and in closed loop control mode. Under any other conditions fast adaption will not take place and may cause default values to be loaded, which may then require a normal 12 minute adaption routine to be run.**

Fault Indications

If 'range' figures at 100% are seen, then the adjustment has reached maximum indicating a mechanical fault exists on the motorcycle. This can be due to a number of faults but the most likely causes will be low/high fuel pressure, faulty injectors or air leaks at the throttle bodies or airbox.

In these circumstances, locate and rectify the fault, and reset the adaptions as described above.

Exhaust System - Rocket III and Classic

Removal

Warning

If the engine has recently been running, the exhaust components may be hot to the touch. Contact with the hot components may cause damage to exposed skin. To avoid skin damage, always allow the hot parts to cool before working on the exhaust system.

Note:

- **In the following procedures, the term catalyst box refers to the rectangular chamber to which the silencers are attached. In many countries, catalytic converters are fitted inside this component. However, in certain countries (depending on their exhaust emission regulation) no catalyst will be fitted.**

Note:

- **Always note the position and orientation of exhaust clamps prior to releasing them, and return them to the noted position and orientation on assembly.**

1. Remove the catalyst box/silencer heat shields.

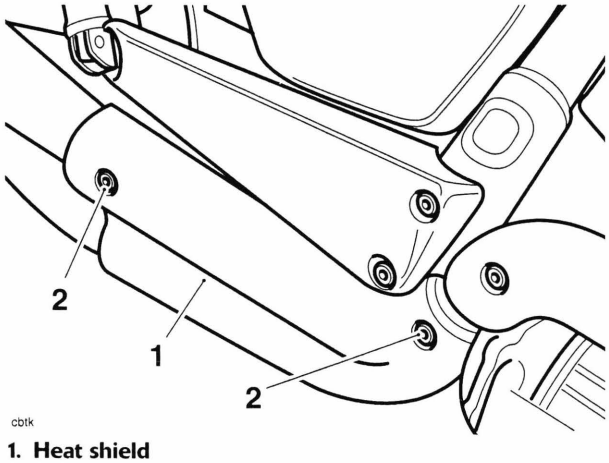

cbtk

1. Heat shield
2. Heat shield fixings

2. Remove the seat (see page *17-18*).
3. Disconnect the battery, negative (black) lead first.
4. Release the clamps securing the silencers to the catalyst box.

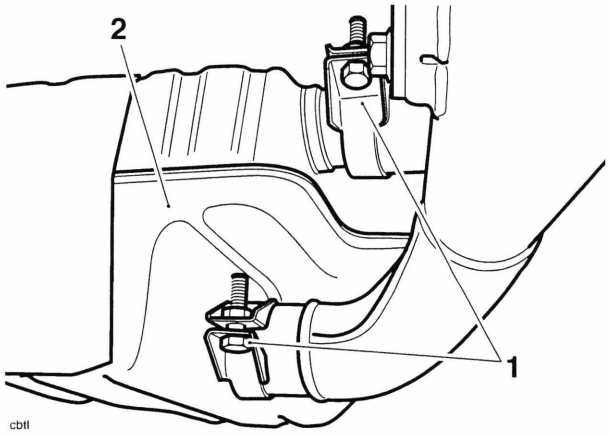

cbtl

1. Silencer clamp fixings
2. Catalyst box

5. Release the fixing securing the silencers to their brackets.

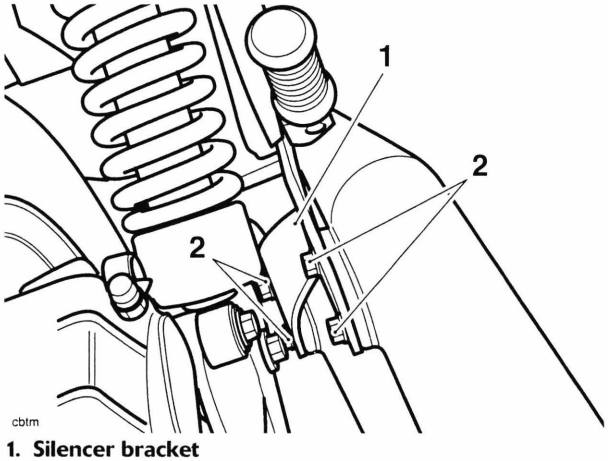

cbtm

1. Silencer bracket
2. Fixings

6. Detach the silencers from the catalyst box.
7. Collect the silencer gaskets.
8. Disconnect the oxygen sensor connection from the wiring harness.
9. Remove the upper heat shields from the exhaust headers.

10. Remove the lower heat shield from the headers. After removal, collect the small rubber isolators from the brackets on the inner heat shield (or on a tag on the end of the upper shields, depending on where they are retained).

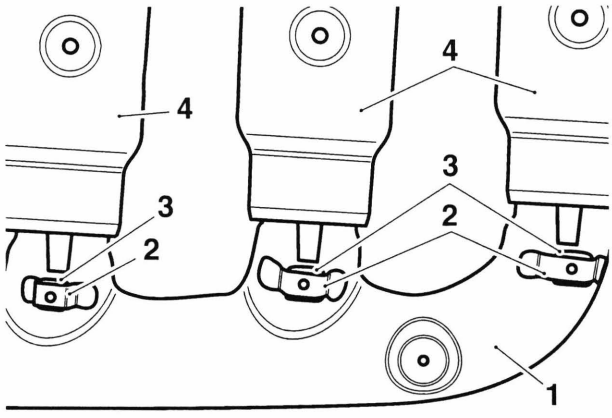

cbtn

1. Inner heat shield
2. Isolator brackets
3. Isolators
4. Upper heat shields

11. Release the clamp securing the headers to the catalyst box.
12. At the cylinder head, release the nuts securing the header pipes to the head.

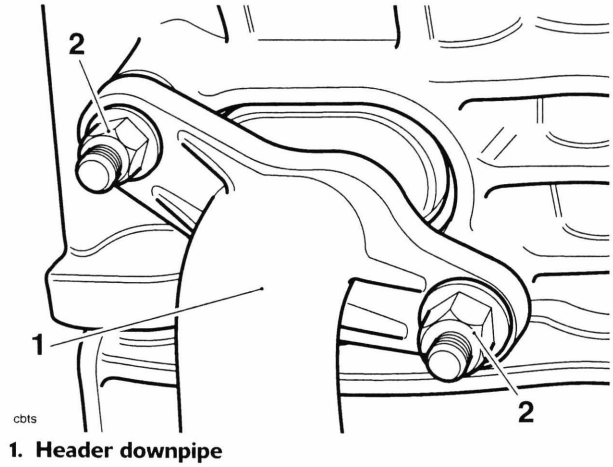

cbts

1. Header downpipe
2. Fixings

13. Detach and remove the header assembly.
14. Collect the header gaskets from the head and catalyst box entry.

Note:

- **The catalyst box is secured to the frame by a single fixing on the right hand side, and is located on two studs on the left hand side.**

⚠ Caution

The catalyst box is located very close to the starter cables. Ensure you have disconnected the battery. Otherwise an electrical short may occur.

15. Release the fixing securing the catalyst box to the frame.

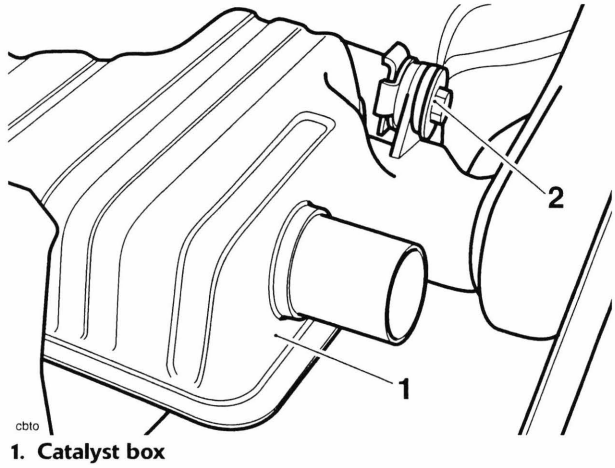

cbto

1. Catalyst box
2. Fixing

16. Detach the catalyst box by easing it to the right hand side of the motorcycle.

Note:

- **Catalyst box mounting grommets may remain in the catalyst box or may adhere to the mounting studs on removal of the catalyst box.**

17. Collect the catalyst box mounting grommets.

Installation

1. Check and if necessary renew the catalyst mounting box grommets. Fit the mounting grommets to the mounting points on the catalyst box.

2. Locate the catalyst box to the mounting studs on the right hand side. Insert the flanged sleeve into the right hand grommet and then fit the bolt and washer to retain the assembly.

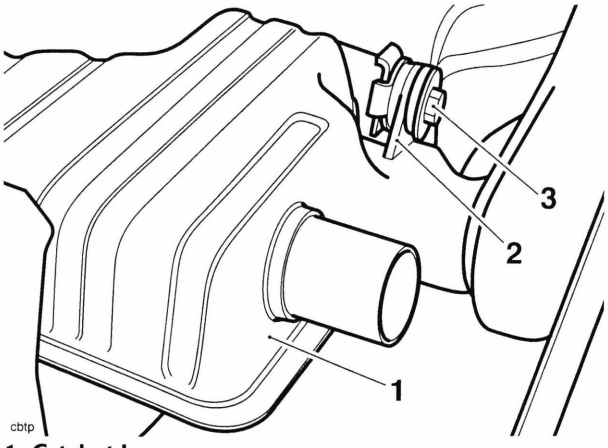

cbtp

1. Catalyst box
2. Right hand mounting
3. Bolt/washer

3. Fit new gaskets to the cylinder head ports.

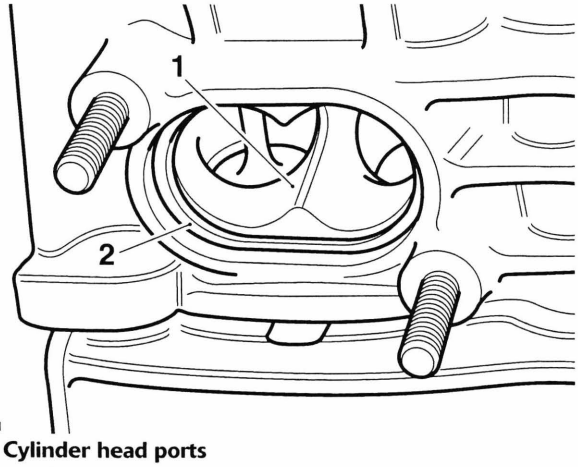

cbtq

1. Cylinder head ports
2. Gaskets

Note:

- **To retain the gaskets during assembly, apply a smear of grease or petroleum jelly to the gasket faces in the head.**

4. Apply a proprietary high temperature grease to the header studs on the cylinder head.
5. Fit a new gasket to the header entry to the catalyst box and position the clamp over the joint.
6. Locate the headers to the catalyst box, then align to the cylinder head. Ensure the gaskets do not become displaced during assembly.
7. Tighten the down-pipe fixings to the cylinder head in the following sequence.

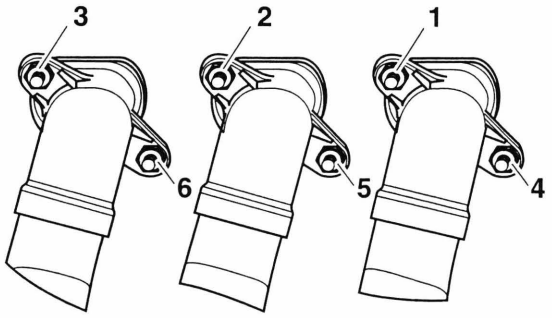

Exham

Exhaust to cylinder head tightening sequence

a) Tighten nuts 1 to 6 to **19 Nm** in the order shown.
b) Retighten nuts 1 to 3 to **19 Nm** in the order shown.

8. Tighten the catalyst box mounting bolt to **22 Nm**.
9. Tighten the header to catalyst box clamp bolt to **22 Nm**.
10. If removed, fit the oxygen sensor and tighten it to **40 Nm**.
11. Reconnect the oxygen sensor to the main wiring harness.
12. Fit the isolator rubbers to the tags at the bottom of the upper heat shields.
13. Position the lower heat shields to the header pipes.
14. Fit the lower heat shield screws, spring washers and flat washers, then tighten the screws to **7 Nm**.
15. Position each of the upper heat shields to the headers, engaging the isolators in the corresponding brackets in the lower inner heat shield.

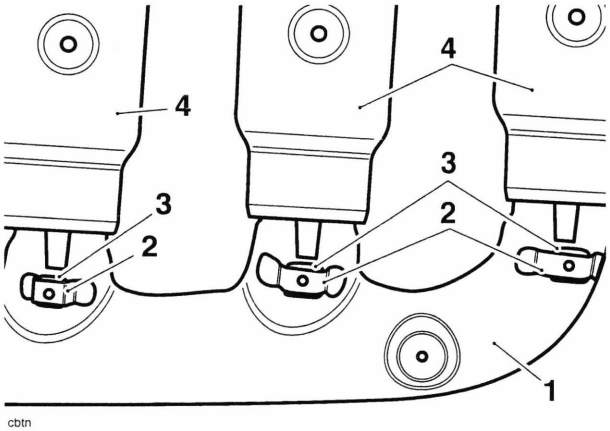

cbtn

1. Inner heat shield
2. Bracket
3. Isolator
4. Upper heat shields

16. Fit the upper heat shield screws, spring washers and flat washers, then tighten the screws to **7 Nm**.
17. Fit new gaskets to each silencer.
18. Position the silencer clamps to each catalyst box exit.
19. Fit each silencer to the catalyst box and position to the silencer brackets.
20. Engage the mounting bracket fixings, finger tight.
21. Tighten each silencer bracket fixing to **27 Nm**.
22. Tighten each silencer clamp to **22 Nm**.
23. Position the heat shields to the silencers.
24. Fit the silencer heat shield screws, spring washers and flat washers, then tighten the screws to **7 Nm**.
25. Reconnect the battery, positive (red) lead first.
26. Fit the seat (see page *17-18*).

Exhaust System - Rocket III Roadster and Touring

Removal

Warning

If the engine has recently been running, the exhaust components may be hot to the touch. Contact with the hot components may cause damage to exposed skin. To avoid skin damage, always allow the hot parts to cool before working on the exhaust system.

Note:

- **The catalytic converters are located with the silencers. However, in certain countries (depending on their exhaust emission regulation) no catalyst will be fitted.**

Note:

- **Always note the position and orientation of exhaust clamps prior to releasing them, and return them to the noted position and orientation on assembly.**

1. Remove the panniers (see page *17-22*).
2. Remove the seat (for Rocket III Roadster see page *17-18*, for Rocket III Touring see page *17-19*).
3. Disconnect the battery, negative (black) lead first.
4. Remove the right hand silencer heat shield.

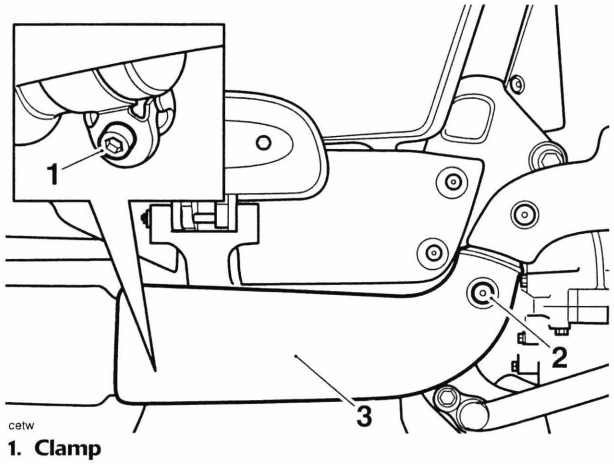

1. Clamp
2. Heat shield front fixing
3. Heat shield

5. Release the clamp securing the right hand silencer to the exhaust link box.

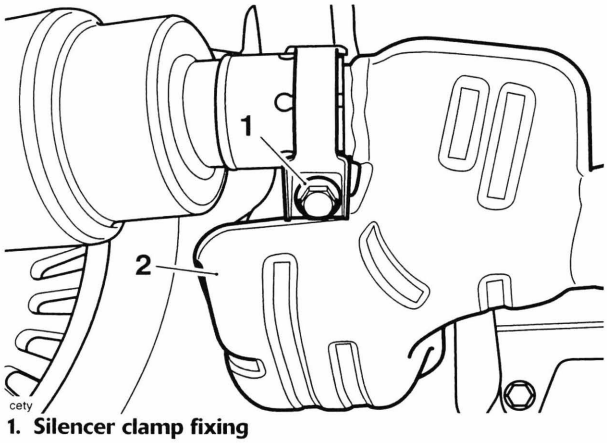

1. Silencer clamp fixing
2. Exhaust link box

Rocket III Roadster only

1. Release the fixings securing the silencer to its bracket and remove the silencer.

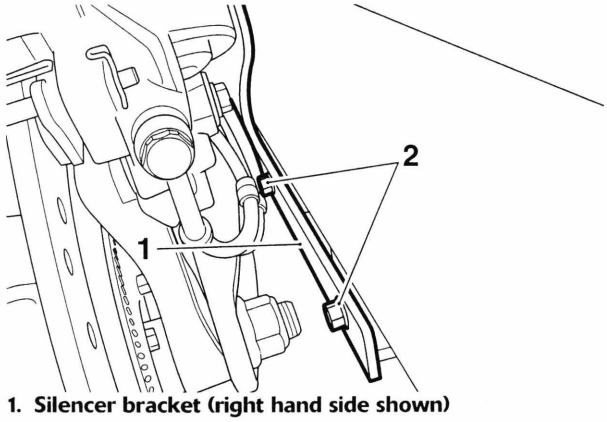

1. Silencer bracket (right hand side shown)
2. Fixings

Rocket III Touring only

2. Release the fixings securing the silencer to the pannier rail and remove the right hand silencer.

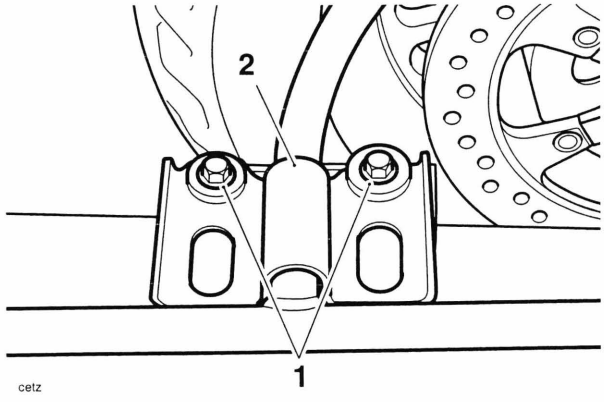

1. Fixings
2. Pannier rail

Rocket III Roadster and Touring

3. Remove the left hand silencer heat shield.

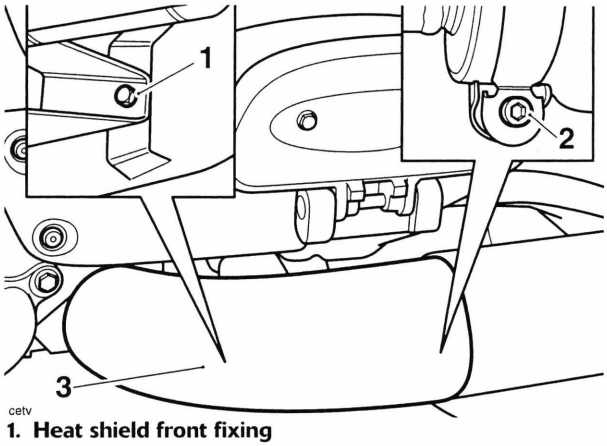

1. Heat shield front fixing
2. Clamp
3. Heat shield

4. Release the clamp securing the left hand silencer to the exhaust link box.

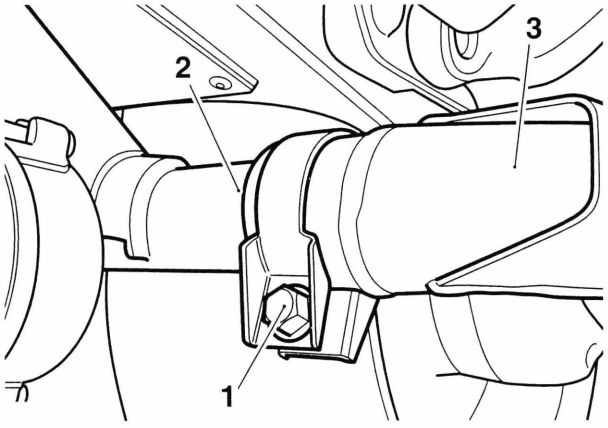

1. Silencer clamp fixings
2. Exhaust link box
3. Left hand silencer

Rocket III Touring only

5. Release the fixings securing the silencer to the pannier rail and remove the left hand silencer.

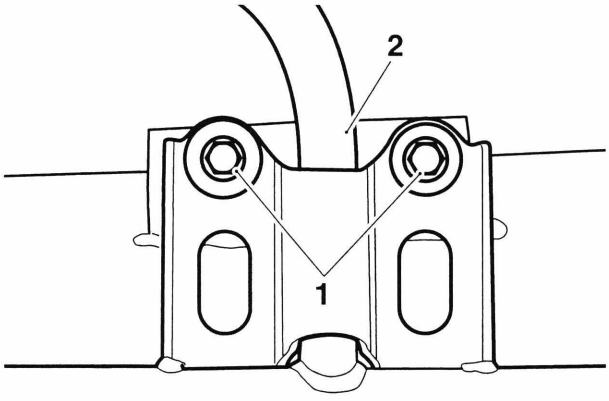

ceua

1. Fixings
2. Pannier rail (Touring shown, Roadster similar)

Rocket III Roadster only

6. Release the fixings securing the silencer to the frame and remove the left hand silencer.

Rocket III Roadster and Touring

7. Remove and discard the silencer gaskets.
8. If the exhaust headers are to be removed, disconnect the oxygen sensor connection from the wiring harness and slacken the oxygen sensor, if equipped.

⚠ Caution

The exhaust link box is located very close to the starter cables. Ensure you have disconnected the battery. Otherwise an electrical short may occur.

9. Release the left hand fixing securing the exhaust link box to the frame.

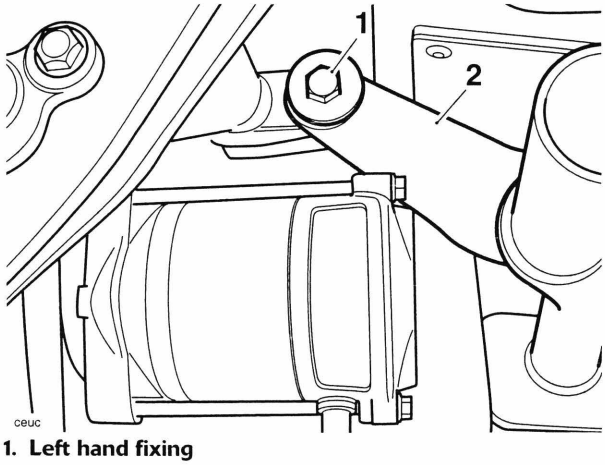

ceuc

1. Left hand fixing
2. Exhaust link box

10. Release the clamp securing the exhaust link box to the exhaust header. Release the right hand fixing and remove the exhaust link box.

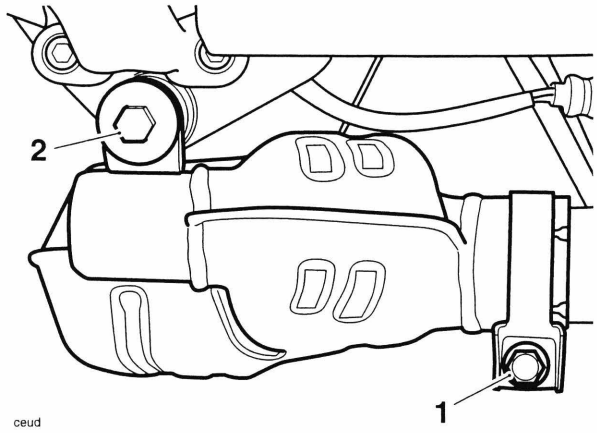

ceud

1. Clamp
2. Right hand fixing

11. Remove and discard the exhaust link box gasket.
12. Remove the lower heat shield from the exhaust headers.
13. Remove the upper heat shield from the headers. After removal, collect the small rubber isolators from the brackets on the inner heat shield (or on a tag on the end of the upper shields, depending on where they are retained).

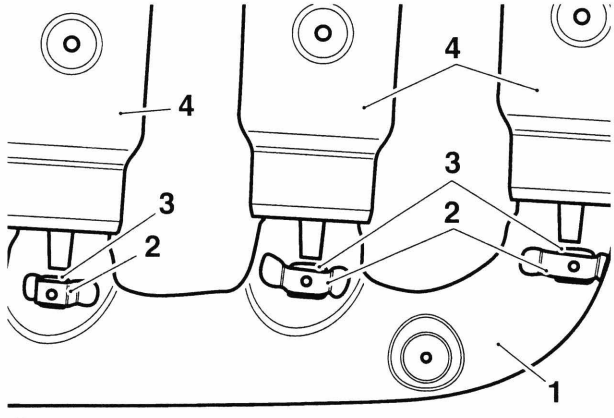

cbtn

1. Inner heat shield
2. Isolator brackets
3. Isolators
4. Upper heat shields

14. At the cylinder head, release the nuts securing the header pipes to the head.

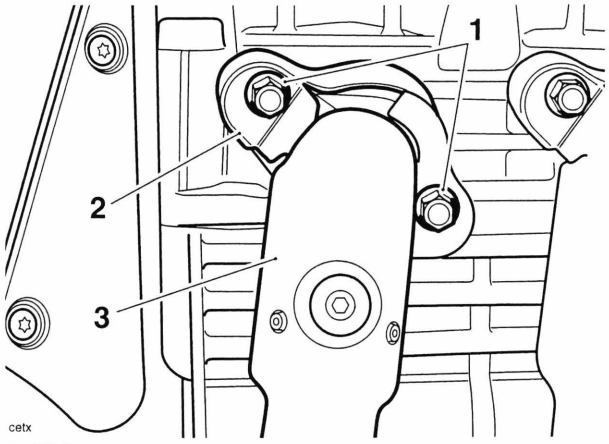

cetx

1. Fixings
2. Header cover
3. Header downpipe

15. Detach and remove the header assembly.
16. Collect the header covers and the header gaskets from the head.

Installation

> **Caution**
>
> To prevent damage to the catalytic converters, do not use exhaust joint compound or sealant. Always fit new exhaust gaskets.

1. Fit new gaskets to the cylinder head ports.

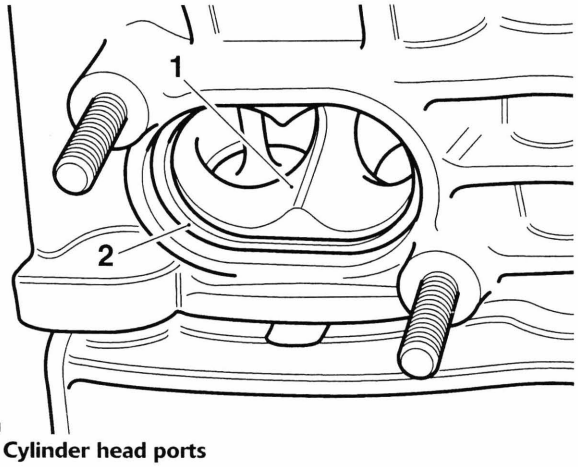

cbtq

1. Cylinder head ports
2. Gaskets

Note:

- **To retain the gaskets during assembly, apply a smear of grease or petroleum jelly to the gasket faces in the head.**

2. Apply a proprietary high temperature grease to the header studs on the cylinder head.
3. Align the header pipes to the cylinder head. Ensure the gaskets do not become displaced during assembly.
4. Refit the header covers.
5. Tighten the down-pipe fixings to the cylinder head in the following sequence.

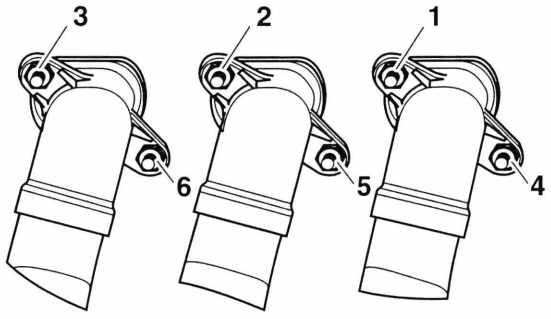

Exham

Exhaust to cylinder head tightening sequence

a) Tighten nuts 1 to 6 to **19 Nm** in the order shown
b) Retighten nuts 1 to 3 to **19 Nm** in the order shown.

6. Check and if necessary renew the exhaust link box mounting grommets. Fit the mounting grommets to the mounting points on the exhaust link box.
7. Fit a new gasket to the header entry of the exhaust link box and position the clamp over the joint.
8. Locate the exhaust link box to the headers, then fit the right hand fixing. Ensure the gaskets do not become displaced during assembly.

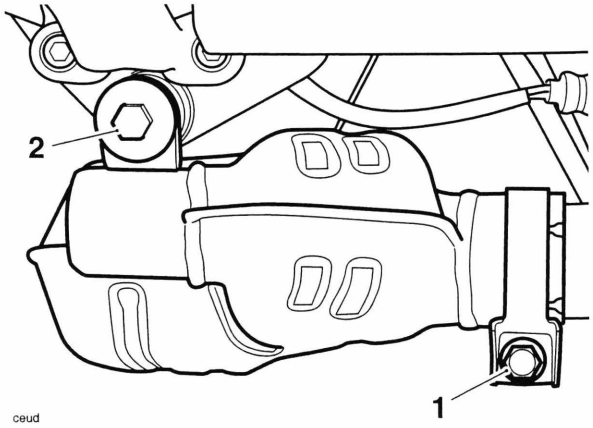

ceud

1. Clamp
2. Right hand fixing

9. Fit the exhaust link box left hand fixing and tighten to **22 Nm**.
10. Tighten the exhaust link box right hand fixing to **22 Nm**.

11. Tighten the header to exhaust link box clamp bolt to **22 Nm**.
12. If removed, fit the oxygen sensor and tighten it to **40 Nm**.
13. Reconnect the oxygen sensor to the main wiring harness.
14. Fit the isolator rubbers to the tags at the bottom of the upper heat shields.
15. Position each of the upper heat shields to the headers, engaging the isolators in the corresponding brackets in the inner heat shield.

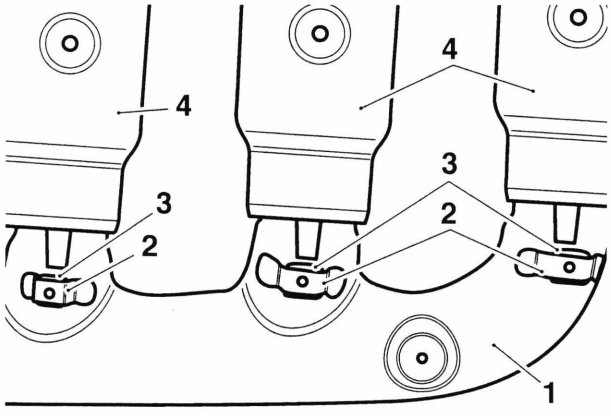

cbtn

1. Inner heat shield
2. Bracket
3. Isolator
4. Upper heat shields

16. Fit the upper heat shield screws and flat washers, then tighten the screws to **7 Nm**.
17. Position the lower heat shields to the header pipes.
18. Fit the lower heat shield screws and flat washers, then tighten the screws to **7 Nm**.
19. Fit new gaskets to each silencer.
20. Position the silencer clamps on to each silencer.
21. Fit the heat shield to the left hand silencer. Tighten the front fixing to **7 Nm** and the clamp fixing to **22 Nm**.

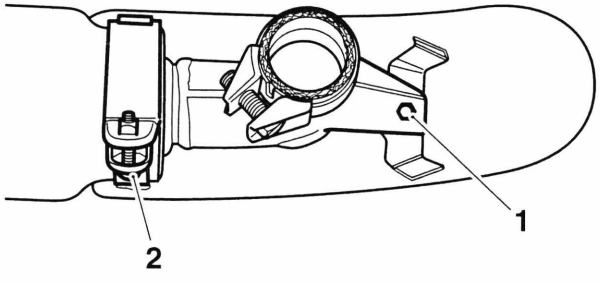

ceue

1. Heat shield front fixing
2. Clamp

Rocket III Touring

22. Fit each silencer to the exhaust link box and position the silencer mountings to the pannier rail.

Rocket III Roadster

23. Fit each silencer to the exhaust link box and position the silencer mountings to the bracket.
24. Tighten each silencer mounting fixings to **27 Nm**.
25. Tighten each silencer clamp to **22 Nm**.

Rocket III Touring

26. Engage the silencer mounting fixings, finger tight.
27. Tighten each silencer mounting fixing to **22 Nm**.
28. Tighten each silencer clamp to **22 Nm**.

Rocket III Roadster and Touring

29. Position the heat shield to the right hand silencer.
30. Fit the silencer heat shield screw and flat washer, then tighten the screw to **7 Nm**. Fit the clamp and tighten the fixing to **22 Nm**.

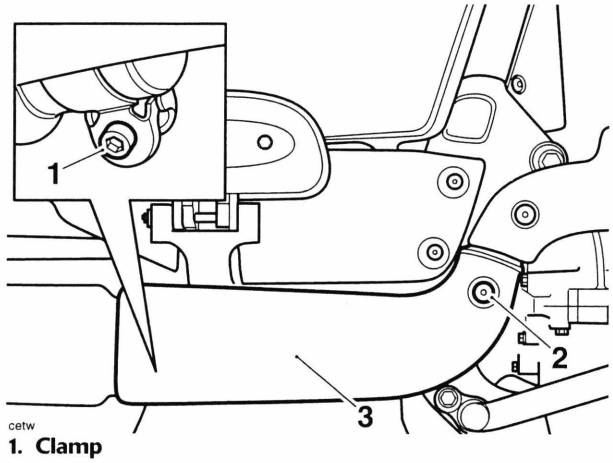

cetw

1. Clamp
2. Heat shield front fixing
3. Heat shield

31. Reconnect the battery, positive (red) lead first.
32. Refit the seat (see page *17-18*).
33. Refit the panniers (see page *17-22*).

Evaporative Loss Control System - US Models Only

US Models Only

All US models are fitted with an evaporative emissions control system to prevent the exhausting of fuel vapour into the atmosphere.

A canister containing activated charcoal, located beneath the left hand side cover, absorbs hydrocarbon vapour given off by the fuel in the fuel tank. Vapour delivery to the canister occurs at all times, but is particularly high after riding, when the motorcycle is parked in direct sunlight or in high temperatures. This causes the fuel temperature in the fuel tank to rise, resulting in a rise in the vapour pressure inside the tank. Normally this vapour would be vented to atmosphere but on California models, it is stored in the charcoal canister.

When the engine is started, the vapour is returned to the throttle body by means of induction vacuum, and is burnt in the engine.

There are two distinct phases to the system's operation, engine off and engine running. These two conditions are explained overleaf.

Component Locations (all situated behind the left hand side cover)

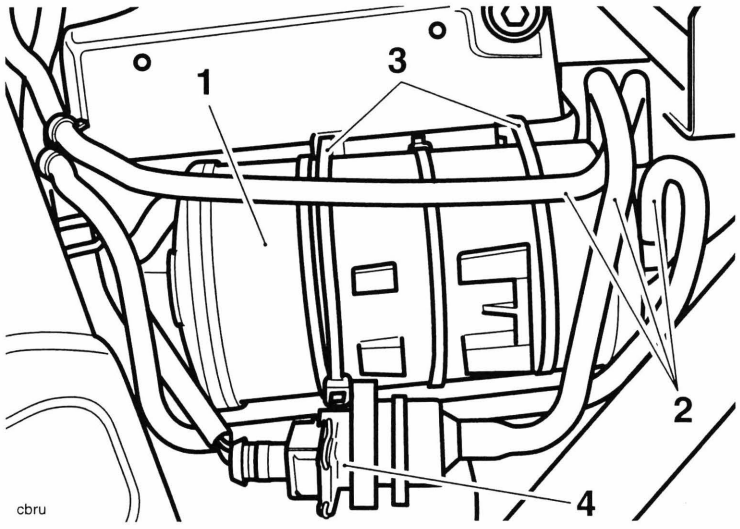

1. **Carbon canister**
2. **Purge valve**
3. **Canister ties**
4. **Purge control valve**

Evaporative Control System - Engine Off

When the engine is switched off, hydrocarbon fuel vapour passes down the breather pipe A, through the roll-over valve to the canister. Vapour is then stored in charcoal layers within the canister.

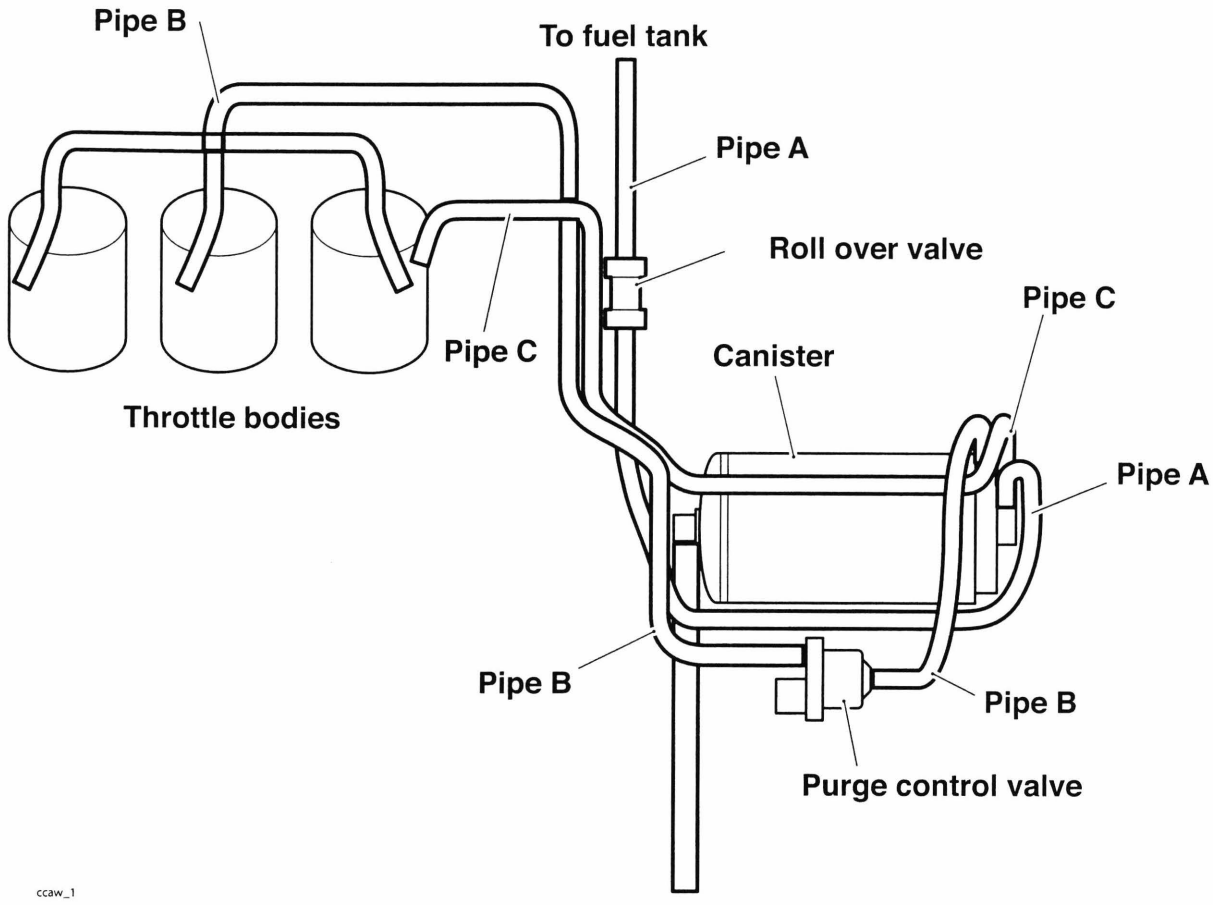

Evaporative Control System - Engine Running

When the engine is started, vacuum from the engine is applied through pipe C to the vacuum switch on the canister, causing the canister return valve to open. Direct return of vapour, along pipe B, to the throttle bodies is prevented by the purge control valve which is governed by the engine management system. When open, the valve allows stored vapour to return to the throttle bodies where it enters the engine and is burnt in the cylinders.

The purge control valve is shuttled between the open and closed position during purging to prevent transient rich mixture and high emissions.

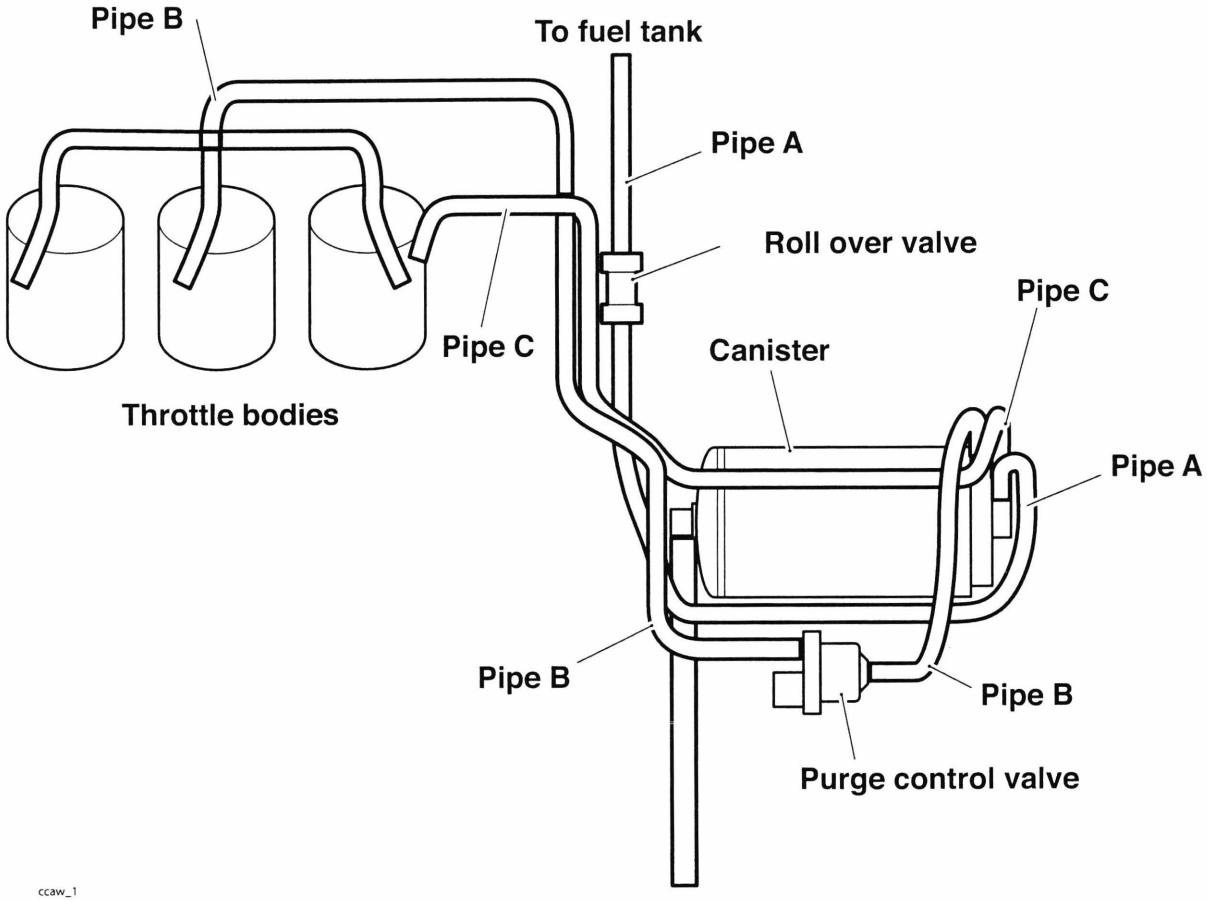

This page intentionally left blank

12 Cooling

Table of Contents

Exploded View - Radiator 12.2
Exploded View - Water Pump, Expansion Tank and Hoses 12.3
Coolant 12.4
Radiator Hoses 12.4
Radiator and Cooling Fan 12.4
Coolant Level Inspection 12.5
- Coolant Level Adjustment 12.5

Coolant Replacement 12.6
- Drainage 12.6
- Filling 12.7

Water Pump 12.8
- Removal 12.8
- Inspection 12.8
- Installation 12.9

Coolant Pressure Cap and Coolant System Testing 12.9
- Inspection 12.9
- Coolant Pressure Cap Test 12.10
- Coolant System Pressure Test 12.10

Thermostat 12.11
- Removal 12.11
- Inspection 12.11
- Installation 12.12

Radiator 12.13
- Removal 12.13
- Inspection 12.15
- Installation 12.15

Exploded View - Radiator

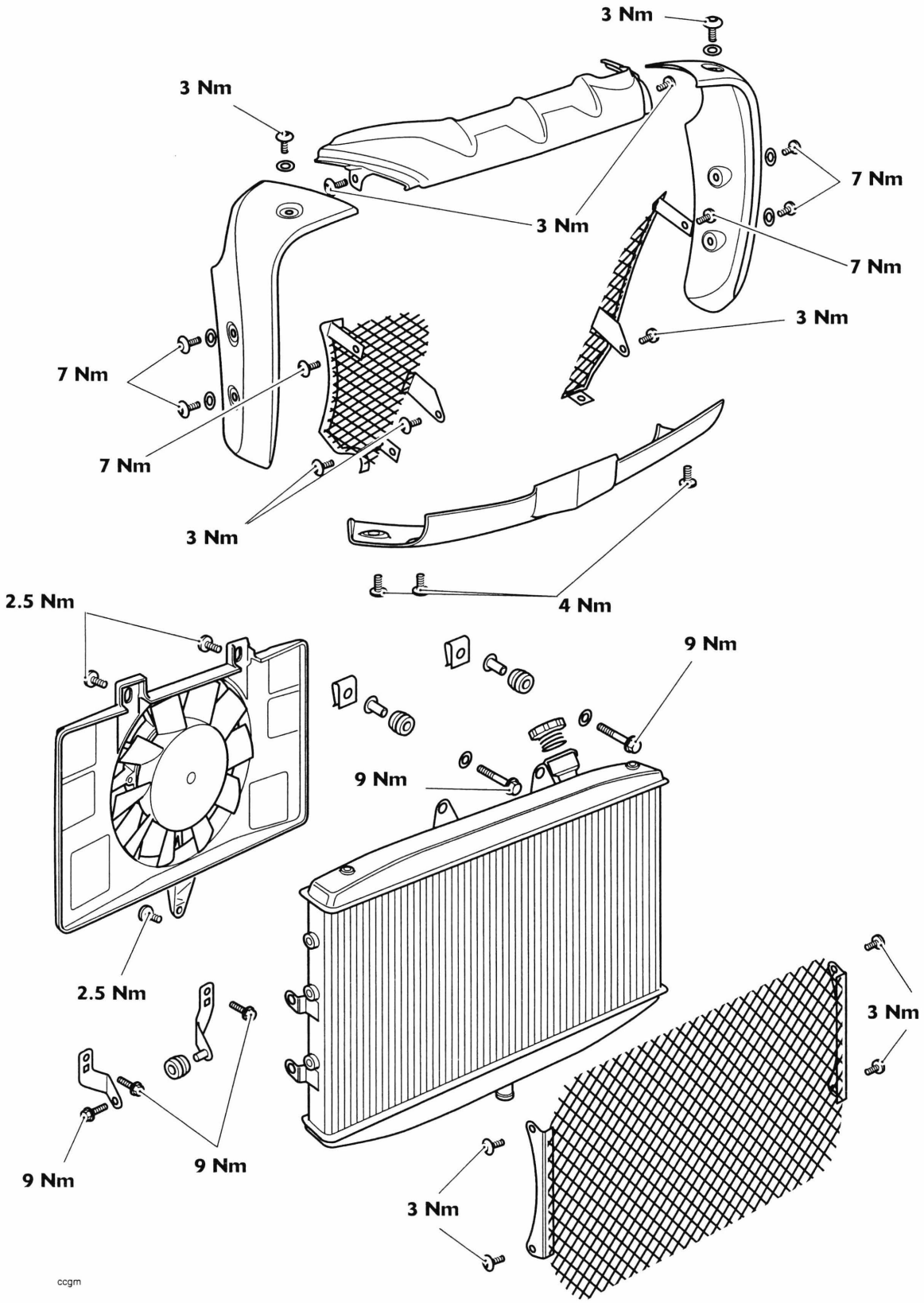

Exploded View - Water Pump, Expansion Tank and Hoses

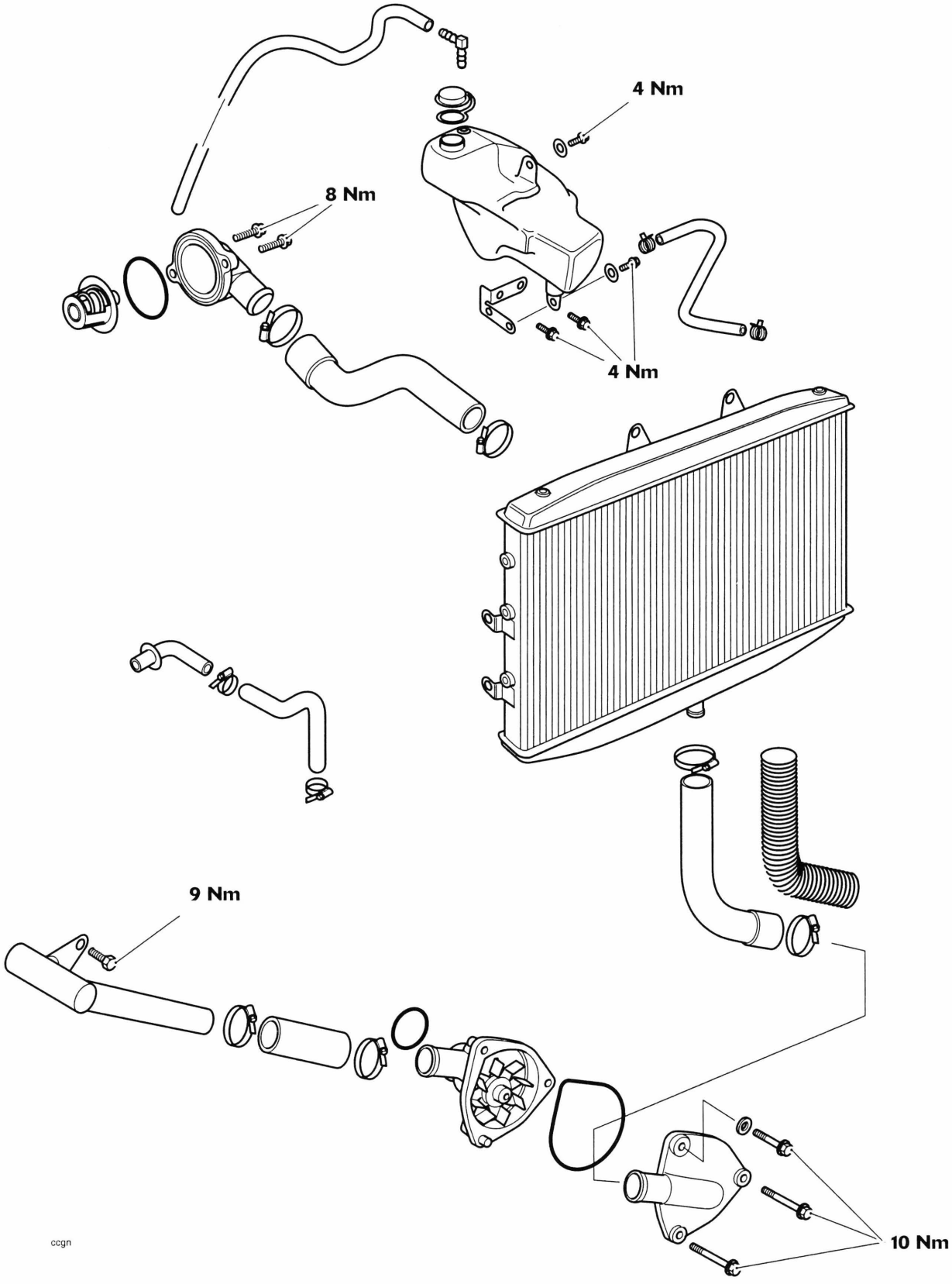

Coolant

A permanent type of anti-freeze is installed in the cooling system when the motorcycle leaves the factory.

A year-round, Hybrid Organic Acid Technology (known as Hybrid OAT or HOAT) coolant is installed in the cooling system. It is coloured green, contains a 50% solution of ethylene glycol based antifreeze, and has a freezing point of -35°C (-31°F).

Note:

- **HD4X Hybrid OAT coolant, as supplied by Triumph, is pre-mixed and does not need to be diluted prior to filling or topping up the cooling system. Always change the coolant at the intervals specified in the Scheduled Maintenance chart.**

⚠ Warning

The standard coolant mixture contains toxic chemicals that are harmful to the human body. Never swallow neat anti-freeze or any of the coolant mixture.

⚠ Caution

The anti-freeze incorporated in the coolant mixture contains a corrosion inhibitor that helps prevent damage to the cooling system and engine. Without this inhibitor, the coolant would 'attack' the metals and the resulting corrosion would cause blockages in the cooling system leading to engine overheating and damage.

Always use the anti-freeze listed in the Specification section and never use a methanol based anti-freeze as this does not contain the required corrosion inhibition properties.

⚠ Caution

Distilled water must be used to dilute anti-freeze to the correct mixture ratio. If hard water is used in the cooling system, it causes scale accumulation in the engine and radiator and considerably reduces the efficiency of the cooling system. Reduced cooling system efficiency may cause the engine to overheat and suffer severe damage.

Radiator Hoses

Regularly check all radiator hoses and hose clips for cracks, leaks or deterioration.

Radiator and Cooling Fan

The motorcycle is fitted with a thermostatically controlled electric fan situated behind the radiator. The fan cowl is fitted with six flap valves to add control to the air flow through the radiator. When the motorcycle is operated at speed and the fan is off, the flap valves open to allow more air flow through the radiator. When the fan operates with the motorcycle stationary or at slow speed, the valves close to ensure cool air is drawn through the radiator from the front of the motorcycle.

Check the radiator fins for obstruction by insects, mud, leaves and general debris. Clean off any obstructions by hand or with a stream of low-pressure water. Ensure the flap valves are not blocked or obstructed and are free to operate.

⚠ Caution

Using high-pressure water, such as from a pressure-washer, can damage the radiator fins and impair the radiator's efficiency.

Do not obstruct or deflect airflow through the radiator by installing unauthorised accessories in front of the radiator or behind the cooling fan. Interference with the radiator airflow can lead to overheating and consequent engine damage.

Coolant Level Inspection

Warning

Before starting work, ensure the motorcycle is stabilised and adequately supported. This will help prevent it from falling and causing injury to the operator or damage to the motorcycle.

1. Position the motorcycle on level ground and in an upright position.

Note:

- **The coolant level within the expansion tank can be inspected, without removing any covers, by looking between the fuel tank and frame headstock on the left hand side of the motorcycle. Always inspect the coolant level with the engine cold.**

2. The coolant level must be between the MAX (upper line) and MIN (lower line) marks in the expansion tank.

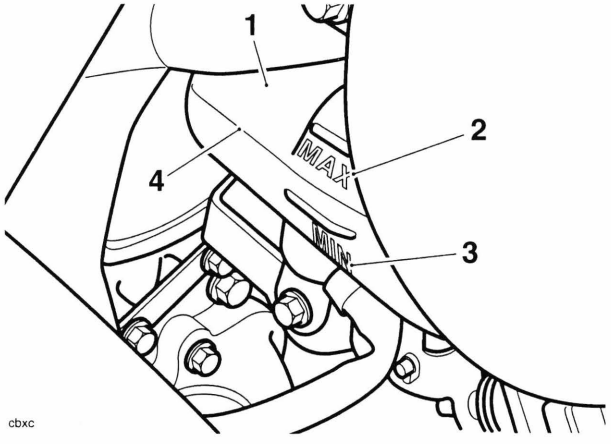

cbxc

1. Expansion tank
2. MAX mark
3. MIN mark
4. Fluid level

3. If the coolant is below the minimum level, or exceeds the maximum, the coolant level must be adjusted.

Coolant Level Adjustment

Warning

Before starting work, ensure the motorcycle is stabilised and adequately supported. This will help prevent it from falling and causing injury to the operator or damage to the motorcycle.

Warning

Do not remove the expansion tank or radiator pressure cap when the engine is hot. When the engine is hot, the coolant inside the expansion tank will be hot and also under pressure. Contact with hot coolant will cause scalds and skin damage.

1. Allow the engine to cool for at least 30 minutes.
2. **Rocket III, Classic and Roadster only:** Remove the intake cover as follows: Release the two screws from its front and rear edges and then slide it downwards to release it from two support studs in its centre.

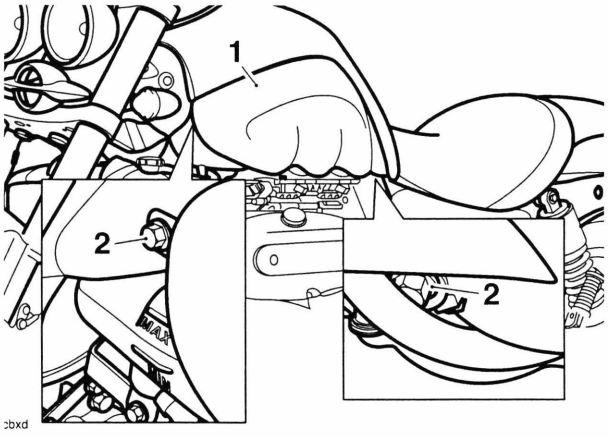

cbxd

1. Intake cover
2. Intake cover screws

3. **Rocket III Touring only:** Remove the intake cover from the left hand side of the tank as follows: Release the screw from its front edge and then slide it forwards to release it from the centre and rear supports.

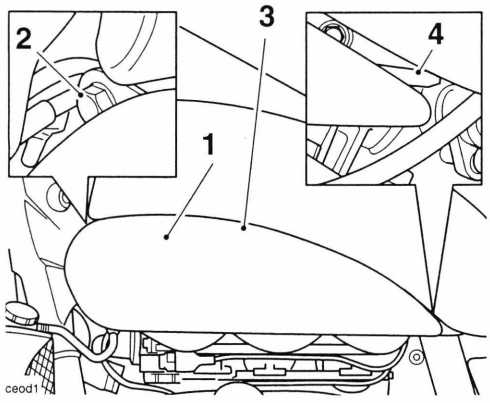

1. **Intake cover**
2. **Intake cover screw**
3. **Intake cover centre support**
4. **Intake cover rear support**

4. **All Models:** Remove the cap from the expansion tank, and add coolant mixture through the filler opening until the level reaches the MAX mark. Refit the cap.

Note:

- **If the coolant level is being checked because the coolant has overheated, also check the level in the radiator and top-up if necessary. In an emergency, water alone can be added to the cooling system. However, the coolant must be returned to the correct mixture ratio as soon as possible.**

5. **Rocket III, Classic and Roadster only:** Refit the intake cover as follows: Align the cover to the centre studs and ease it into place. Fit and tighten the two screws to **9 Nm**.
6. **Rocket III Touring only:** Refit the intake cover as follows: Align the cover to the centre and rear supports and ease it into place. Fit and tighten the screw to **9 Nm**.

Coolant Replacement

Drainage

Warning

Do not remove the coolant pressure cap when the engine is hot. When the engine is hot, the coolant inside the radiator is hot and also under pressure. Contact with hot coolant will cause scalds and skin damage.

Warning

Before starting work, ensure the motorcycle is stabilised and adequately supported. This will help prevent it from falling and causing injury to the operator or damage to the motorcycle.

1. Remove the left hand radiator cover.

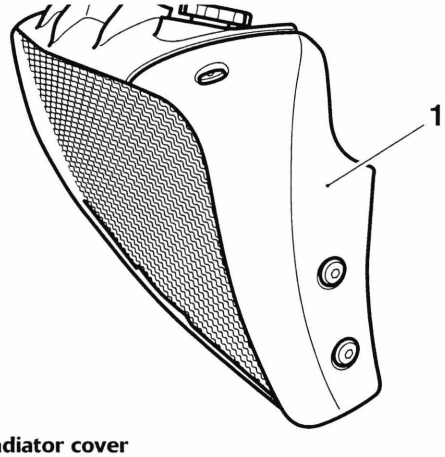

1. **Radiator cover**

2. Release the security screw and remove the coolant pressure cap on the radiator.

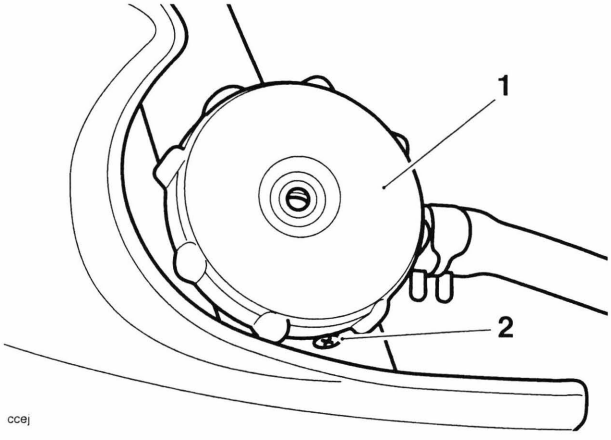

1. **Radiator cap**
2. **Security screw**

3. Position a container beneath the water pump to collect the displaced coolant.
4. Detach the bottom hose from the water pump and allow the coolant to drain out.

Note:

- **To facilitate full drain out, also remove the drain plug from the water pump.**

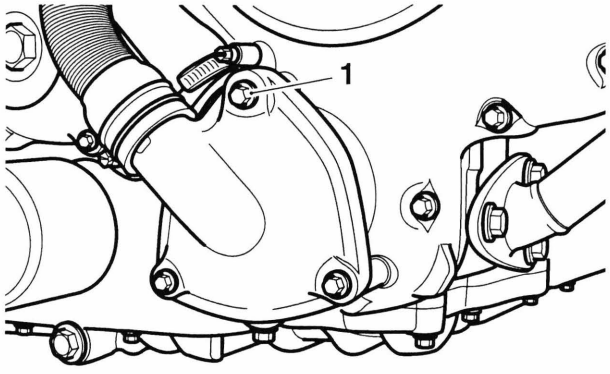

cbxg

1. Water pump drain plug

Filling

1. If removed, refit the water pump drain plug. Tighten the plug to **10 Nm**.
2. Reconnect the bottom hose and tighten the clip.
3. Open the cooling system bleed screw.

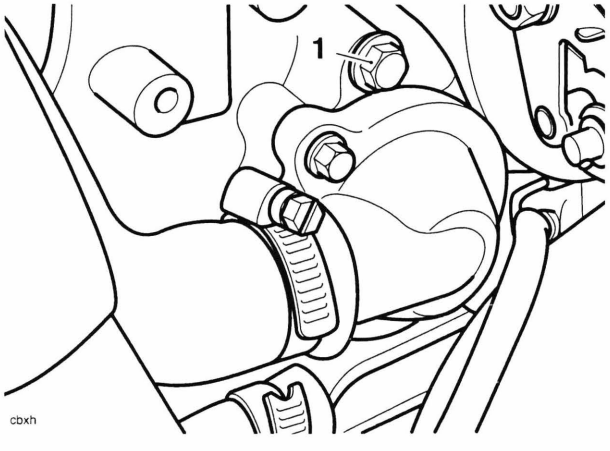

cbxh

1. Bleed screw

4. Slowly add coolant mixture to the system, through the filler opening in the radiator, until coolant escapes from the bleed screw. Close the bleed screw, tightening it to **10 Nm**.
5. If necessary, top up the system through the radiator filler.
6. Refit the pressure cap.
7. Start the motorcycle and allow the engine to idle for a short period of time to allow any air to be expelled from the system.

⚠ Warning

Do not remove the coolant pressure cap when the engine is hot. When the engine is hot, the coolant inside the cooling system is hot and also under pressure. Contact with hot coolant will cause scalds and skin damage.

8. Stop the engine and top up the coolant level as necessary.
9. Refit the coolant pressure cap and tighten the security screw to **1 Nm**.
10. Refit the left hand radiator cover, tightening the top fixing to **4 Nm** and the side fixings to **7 Nm**.
11. Check the expansion tank level and top up if necessary (see page *12-5*).

Water Pump

Removal

Caution

Due to the design of the water pump, it is possible that a small amount of condensation may form in its internal chamber. The condensation will then either evaporate through the vent at the top of the pump (when the engine is running and is hot) or it will form as a small drop of liquid at the tell-tale hole located at the bottom of the housing (when parked overnight after use). Therefore, if a small drop of liquid is noticed at the tell-tale hole, it does not mean that the pump is faulty and requires replacement. However, should the droplet of liquid become more persistent then the pump will need further investigation.

Warning

Before starting work, ensure the motorcycle is stabilised and adequately supported. This will help prevent it from falling and causing injury to the operator or damage to the motorcycle.

1. Remove the seat (see page *17-18* for Rocket III, Classic and Roadster, see page *17-19* for Rocket III Touring).
2. Disconnect the battery, negative (black) lead first.
3. Drain the coolant (see page *12-6*).

Warning

Do not remove the coolant pressure cap when the engine is hot. When the engine is hot, the coolant inside the radiator is hot and also under pressure. Contact with hot coolant will cause scalds and skin damage.

4. Turn the steering to left or right full lock.
5. Disconnect the coolant hoses from the water pump.

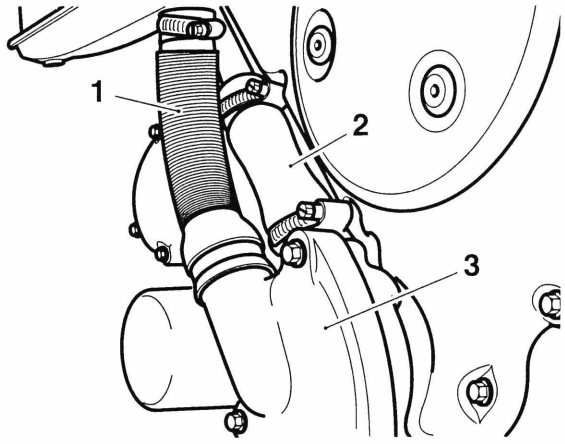

1. Bottom radiator hose
2. Pump outlet hose
3. Water pump

6. Release the two lower bolts that secure the water pump to the crankcase.

Note:

- **The third, upper bolt is the drain plug and also holds the water pump together.**

7. Withdraw the water pump.

Inspection

1. Remove the pump outer cover to check for corrosion and scale build-up around the impeller and in the pump body. Renew if necessary.
2. Check the water pump shaft and shaft bearings for side and end float. Clean or renew if necessary.
3. Check the water pump gland for signs of leakage. Renew the pump if leakage is evident.

Installation

1. Replace the water pump O-ring seal.

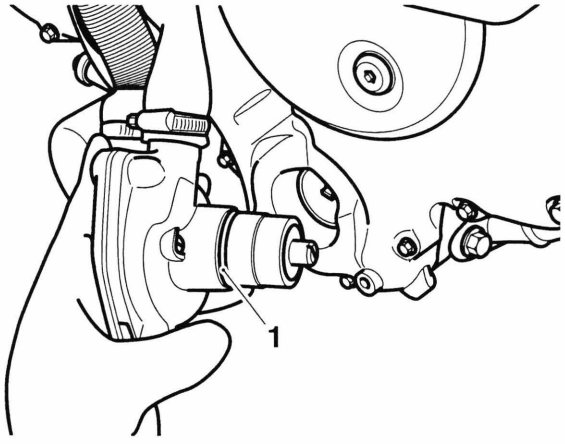

cbxj

1. O-ring seal

2. Align the drive slot in the water pump with the drive blade on the oil pump shaft (inside the crankcase).

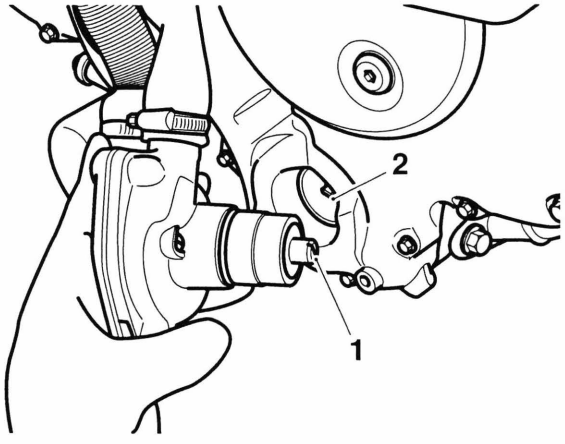

cbxk

1. Water pump slot
2. Oil pump shaft, drive blade

Note:

- **The water pump will not engage fully into the crankcase unless the drive slot and blade are aligned and engaged.**

3. Fit the pump and tighten the fixings to **10 Nm**.
4. Refit the hoses to the water pump and tighten the clips.
5. Reconnect the battery, positive (red) lead first.
6. Refit the seat (see page *17-18* for Rocket III, Classic and Roadster, see page *17-19* for Rocket III Touring).
7. Refill the cooling system (see page *12-7*).

Coolant Pressure Cap and Coolant System Testing

Inspection

Warning

Do not remove the coolant pressure cap when the engine is hot. When the engine is hot, the coolant inside the radiator is hot and also under pressure. Contact with hot coolant will cause scalds and skin damage.

Warning

Before starting work, ensure the motorcycle is stabilised and adequately supported. This will help prevent it from falling and causing injury to the operator or damage to the motorcycle.

1. Allow the engine temperature to cool for at least 30 minutes.
2. Remove the coolant pressure cap as described in the Coolant Drain section on page *12-6*.
3. Check the condition of the upper and lower seals of the coolant pressure cap.

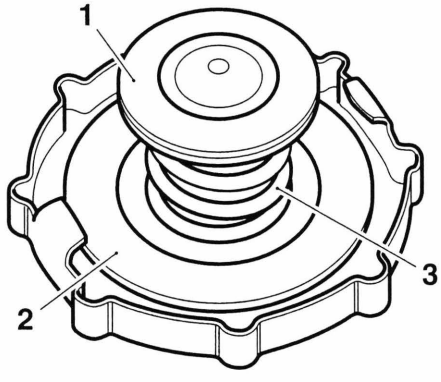

ccer

1. Lower Seal
2. Upper Seal
3. Spring

Note:

- **If there is any sign of damage or deterioration replace the cap.**

4. Pressure test the cap and cooling system to the blow off pressure of 1.2 bar as described below using T3880147.

Note:

- **It is recommended to carry out coolant pressure cap and cooling system pressure tests consecutively.**

Coolant Pressure Cap Test

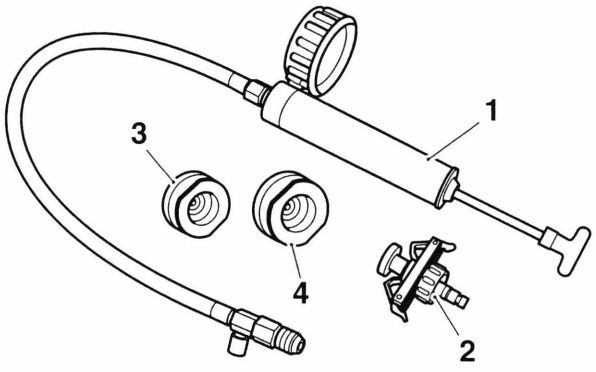

cgwp

1. Hand held pump
2. Bayonet type connector
3. Pressure cap test adaptor 44 mm
4. Pressure cap test adaptor 46 mm

1. Select the correct test adapter and securely fasten to the pressure cap.
2. Carefully connect the hand pump to the adapter ensuring an air tight seal is maintained.

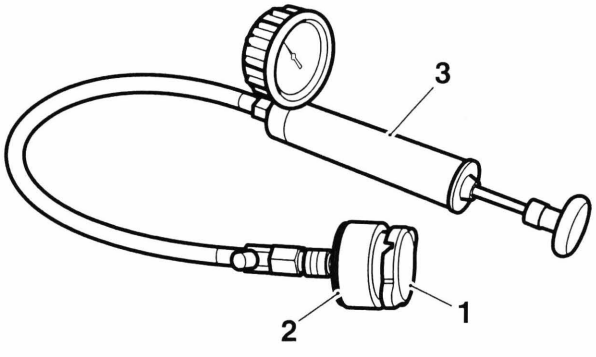

cgwq

1. Pressure cap
2. Test adapter
3. Hand held pump

3. Pressure test the cap to its 1.2 bar blow off pressure. If the coolant cap opens at a lower pressure, fails to open at the correct pressure or the seal leaks, replace the cap.

Coolant System Pressure Test

1. Select the bayonet type adapter and securely fasten to the radiator.
2. Carefully connect the hand pump to the bayonet connector ensuring an air tight seal is maintained.

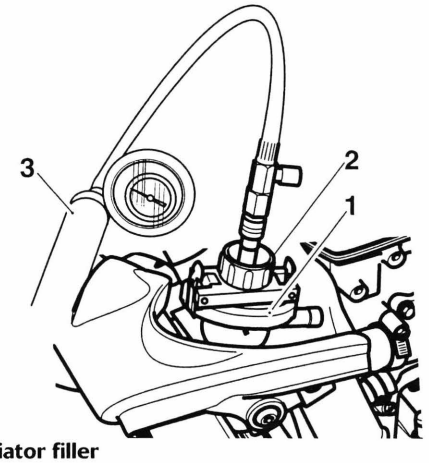

cceq_1

1. Radiator filler
2. Bayonet type connector
3. Hand held pump

3. Pressurise the cooling system to the operating pressure, using the hand pump taking care not to exceed 1.2 Bar.
4. Hold the pressure for a minimum of 10 minutes, whilst visually inspecting the external components of the coolant system for leaks.
5. Remove the engine oil filler cap/dipstick and check for contamination of the engine oil caused by coolant escaping into the engine sump.

Note:

- **If the engine oil is contaminated further exploratory investigation will be required.**
- **If the engine oil is contaminated rectify the cause of the problem and then renew the oil and filter.**

6. Depressurise the coolant test kit using the pressure release valve.

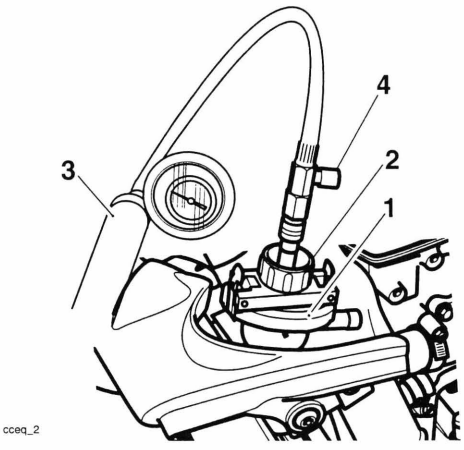

1. Radiator filler
2. Bayonet type connector
3. Hand held pump
4. Pressure release valve

7. Refit the pressure cap as described in the Coolant Fill section on page *12-7*.
8. Fill the coolant to the maximum mark (see page *12-5*).

Thermostat

Removal

Warning

Before starting work, ensure the motorcycle is stabilised and adequately supported. This will help prevent it from falling and causing injury to the operator or damage to the motorcycle.

1. Remove the seat (see page *17-18* for Rocket III, Classic and Roadster, see page *17-19* for Rocket III Touring).
2. Disconnect the battery, negative (black) lead first.
3. Drain the coolant (see page *12-6*).

Warning

Do not remove the coolant pressure cap when the engine is hot. When the engine is hot, the coolant inside the radiator is hot and also under pressure. Contact with hot coolant will cause scalds and skin damage.

4. Disconnect the top and bypass hoses at the thermostat housing.

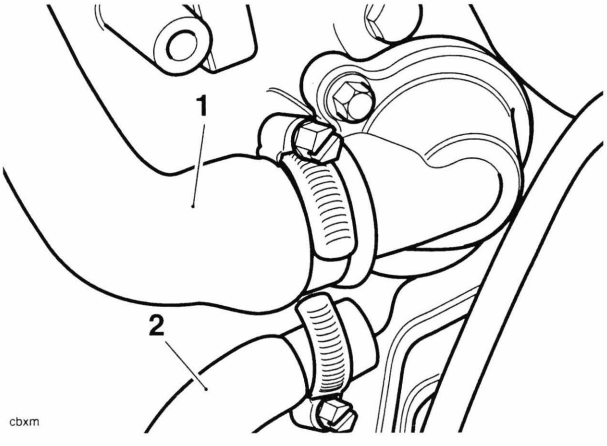

1. Top hose
2. Bypass hose

5. Release the fixings securing the thermostat housing to the cylinder head.
6. Withdraw the housing and collect the thermostat.

Inspection

1. Inspect the thermostat at room temperature. If the valve is open, the thermostat must be replaced.

2. To check the valve opening temperature, suspend the thermostat in a container of water together with a thermometer. Raise the temperature of the water until the thermostat opens. The thermostat should start to open at 88°C +/- 5°C.
3. If the temperature at which thermostat opening takes place is incorrect, replace the thermostat.

Installation

1. Clean the mating surfaces of the cylinder head and thermostat housing.
2. Locate the thermostat into the head with the jiggle pin 15 degrees to the left of the fully upright position.

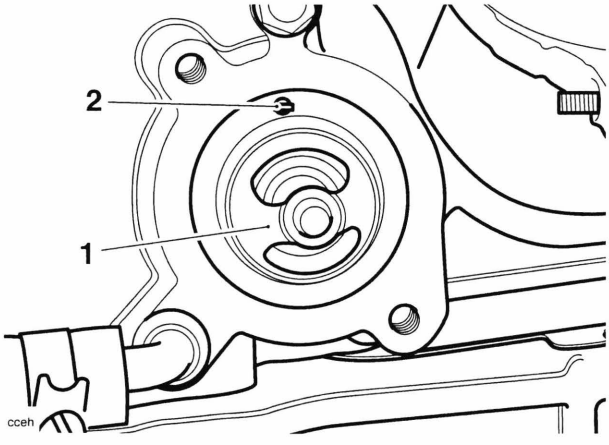

1. Thermostat
2. Jiggle pin

3. Rotate the thermostat until the jiggle pin is in the fully upright position.

Note:

- **When correctly positioned, the thermostat will fit snugly into the head, the jiggle pin will be in the twelve o'clock position and the thermostat will not turn any further clockwise.**

4. Position a new O-ring to the thermostat housing and seat into the groove.

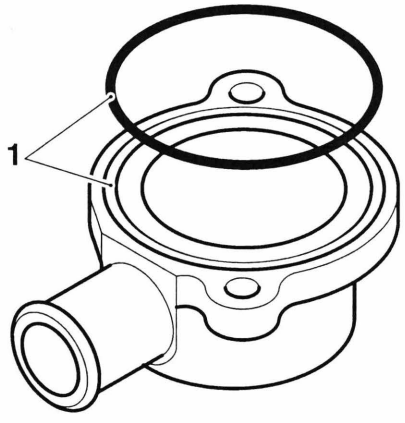

1. O-ring/groove

5. Locate the thermostat housing to the head, ensuring that the O-ring does not become detached. Tighten the fixings to **8 Nm**.
6. Reconnect the top hose and secure with the hose clip.
7. Reconnect the battery, positive (red) lead first.
8. Refit the seat (see page *17-18* for Rocket III, Classic and Roadster, see page *17-19* for Rocket III Touring).
9. Refill the cooling system (see page *12-7*).

Radiator

Removal

Warning

Before starting work, ensure the motorcycle is stabilised and adequately supported. This will help prevent it from falling and causing injury to the operator or damage to the motorcycle.

1. Remove the seat (see page *17-18* for Rocket III, Classic and Roadster, see page *17-19* for Rocket III Touring).
2. Disconnect the battery, negative (black) lead first.

Warning

Do not remove the coolant pressure cap when the engine is hot. When the engine is hot, the coolant inside the radiator is hot and also under pressure. Contact with hot coolant will cause scalds and skin damage.

3. Drain the coolant (see page *12-6*).
4. Disconnect the top hose and bypass hose from the thermostat housing and head respectively.

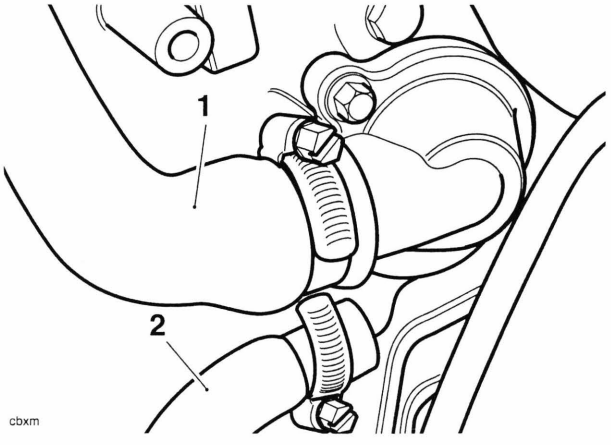

cbxm

1. Top hose
2. Bypass hose

5. Disconnect the water pump hoses at the radiator.

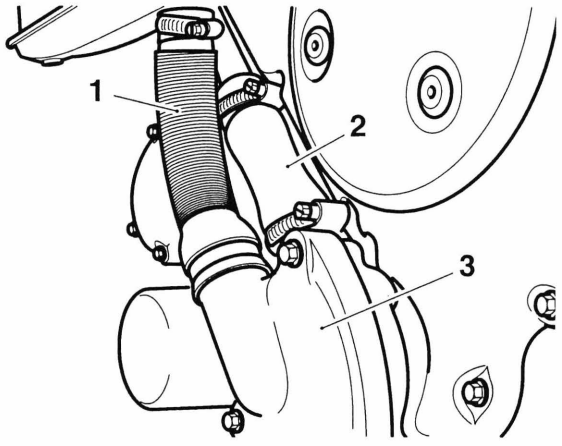

cbxi

1. Bottom radiator hose
2. Water pump outlet hose
3. Water pump

6. Remove both radiator side covers.

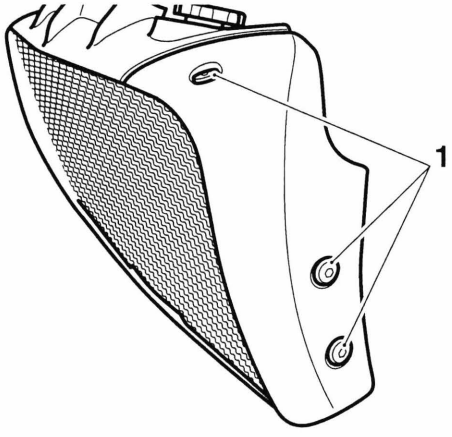

ccel

1. Side cover fixings

7. Remove the lower radiator cover.

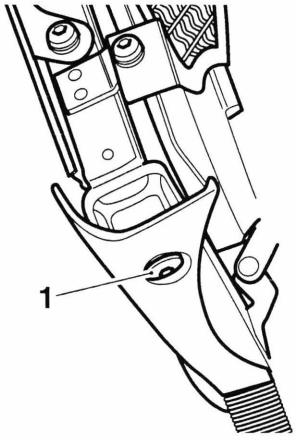

ccem

1. Lower cover fixing (left hand shown)

8. Remove the radiator side grilles.

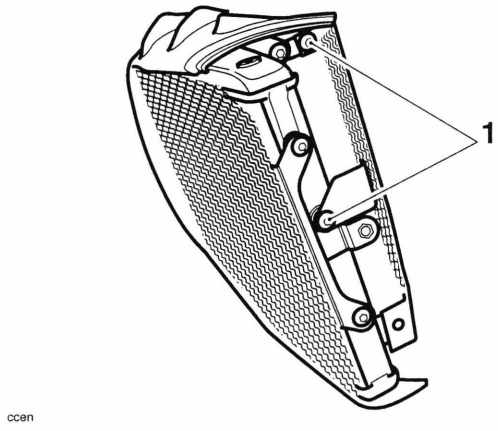

1. Side grille fixings

9. Remove the upper radiator cover.

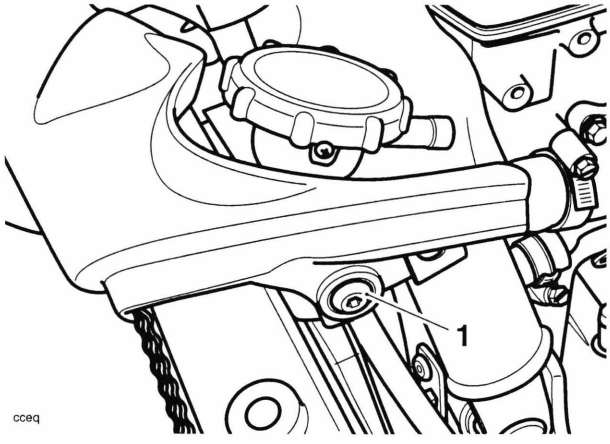

1. Upper radiator cover fixings (left hand shown)

10. Optionally, to prevent the possibility of damage, remove the radiator front grille.

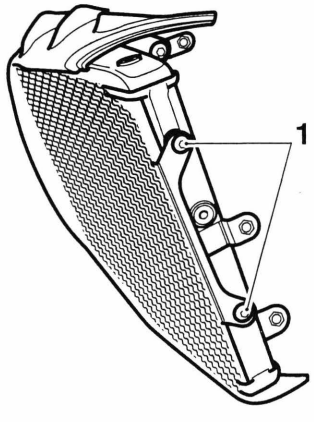

1. Front grille fixings

11. Release the radiator upper mounting bolts.

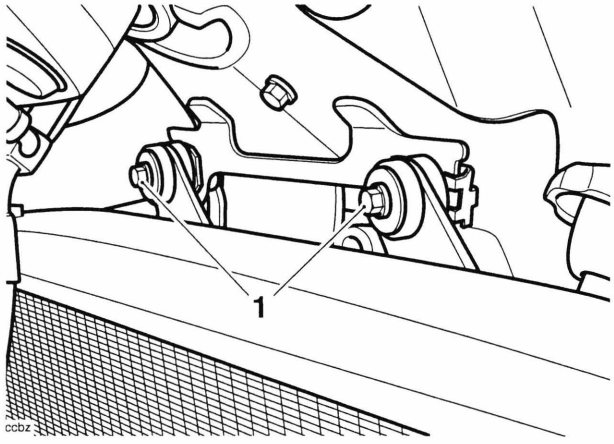

1. Radiator upper mounting bolts

12. Release the lower mounting bolt from the right hand side.
13. Disconnect the cooling fan.
14. Ease the radiator towards the right hand side of the motorcycle to dislodge it from its lower mounting stud.

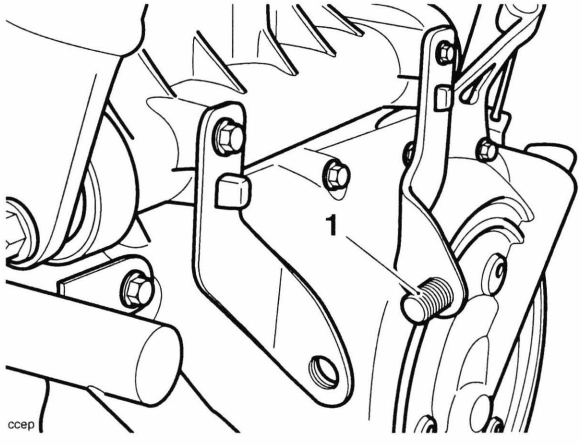

1. Radiator mounting stud

15. Remove the radiator.

Inspection

1. Check the radiator for stone damage.
2. Check the radiator core, for damage to fins or obstructions to air flow.
3. Repair any damage and clear all obstructions.

Caution

To avoid overheating and consequent engine damage, replace the radiator if the cores are blocked or if the fins are badly deformed or broken.

4. Check that the fan spins freely and without tight spots.
5. Check the fan blades for signs of heat distortion.
6. Check the fan cowl flaps for unobstructed operation and for splits and deformation of the flaps.

Installation

1. Align the radiator to the lower mounting stud, reconnect the cooling fan before fitting the upper and lower mounting bolts.
2. Tighten the mounting bolts to **9** Nm.
3. Reconnect the top and bypass hoses to the thermostat housing and head respectively. Tighten the hose clips.
4. Reconnect the bottom hose to the radiator. Tighten the hose clip.
5. In the following order, refit the:
   - Front radiator grille if removed, tighten the fixing to **3 Nm**.
   - Upper radiator cover, tighten the fixing to **3 Nm**.
   - Side radiator grilles, tighten the side fixing to **3 Nm** and the upper fixing to **7 Nm**.
   - Lower radiator cover, tighten the fixing to **4 Nm**.
6. Reconnect the battery, positive (red) lead first.
7. Refit the seat (see page *17-18* for Rocket III, Classic and Roadster, see page *17-19* for Rocket III Touring).
8. Refill the cooling system (see page *12-7*).
9. Refit the radiator side covers, tighten the top fixing to **4 Nm** and the side fixings to **7 Nm**.

This page intentionally left blank

13 Front Suspension

Table of Contents

Exploded View - Front Fork, Top and Bottom Yokes and Steering Head Bearings - Rocket III, Classic and Roadster 13.3

Exploded View - Front Fork, Top and Bottom Yokes and Steering Head Bearings - Rocket III Touring 13.4

Exploded View - Handlebars - Rocket III up to VIN 241569 ..... 13.5

Exploded View - Handlebars - Rocket III, Rocket III Classic and Rocket III Roadster from VIN 241570 ..... 13.6

Exploded View - Handlebars - Rocket III Touring 13.7

Fork Inspection 13.8

Front Fork - Rocket III, Classic and Roadster 13.8

- Removal 13.8
- Installation 13.9

Fork Oil Change - Rocket III, Classic and Roadster 13.9

- Oil refilling 13.11

Front Fork - Rocket III, Classic and Roadster 13.13

- Disassembly 13.13
- Inspection 13.16
- Assembly 13.16

Steering Head Bearing Check and Adjustment - Rocket III, Classic and Roadster 13.19

- Check 13.19
- Adjustment 13.19

Bottom Yoke and Headstock Bearings - Rocket III, Classic and Roadster 13.22

- Yoke Removal 13.22
- Bearing removal 13.24
- Installation 13.25

Front Fork - Rocket III Touring 13.27

- Removal 13.27
- Installation 13.28

Fork Oil Change - Rocket III Touring 13.29

- Oil draining 13.29
- Oil refilling 13.30

Front Fork - Rocket III Touring 13.32
Disassembly 13.32
Inspection 13.34
Assembly 13.34
Steering Head Bearing Check and Adjustment - Rocket III Touring 13.36
Check 13.36
Adjustment 13.36
Bottom Yoke and Headstock Bearings - Rocket III Touring 13.38
Yoke Removal 13.38
Bearing removal 13.40
Installation 13.40

Exploded View - Front Fork, Top and Bottom Yokes and Steering Head Bearings - Rocket III, Classic and Roadster

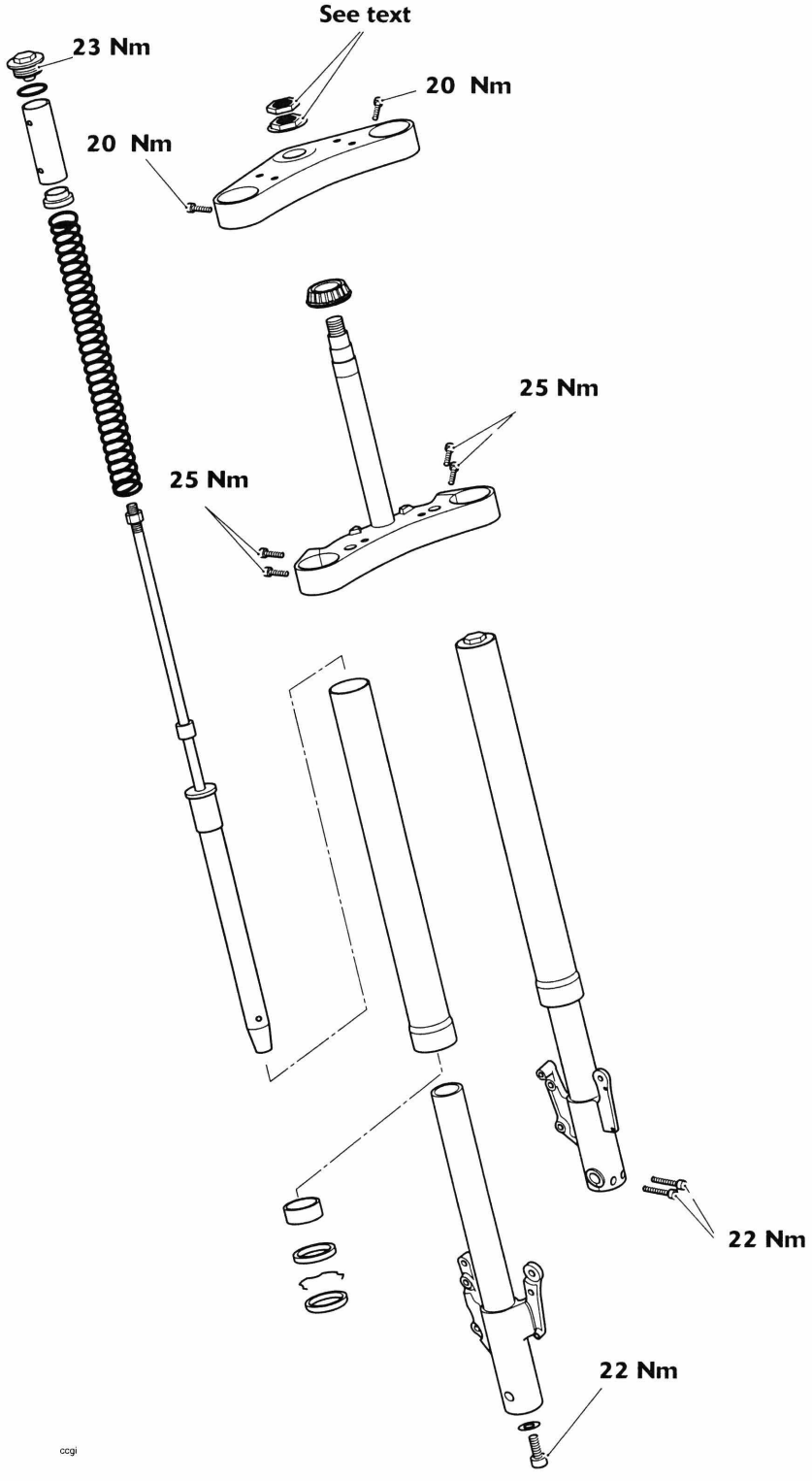

Exploded View - Front Fork, Top and Bottom Yokes and Steering Head Bearings - Rocket III Touring

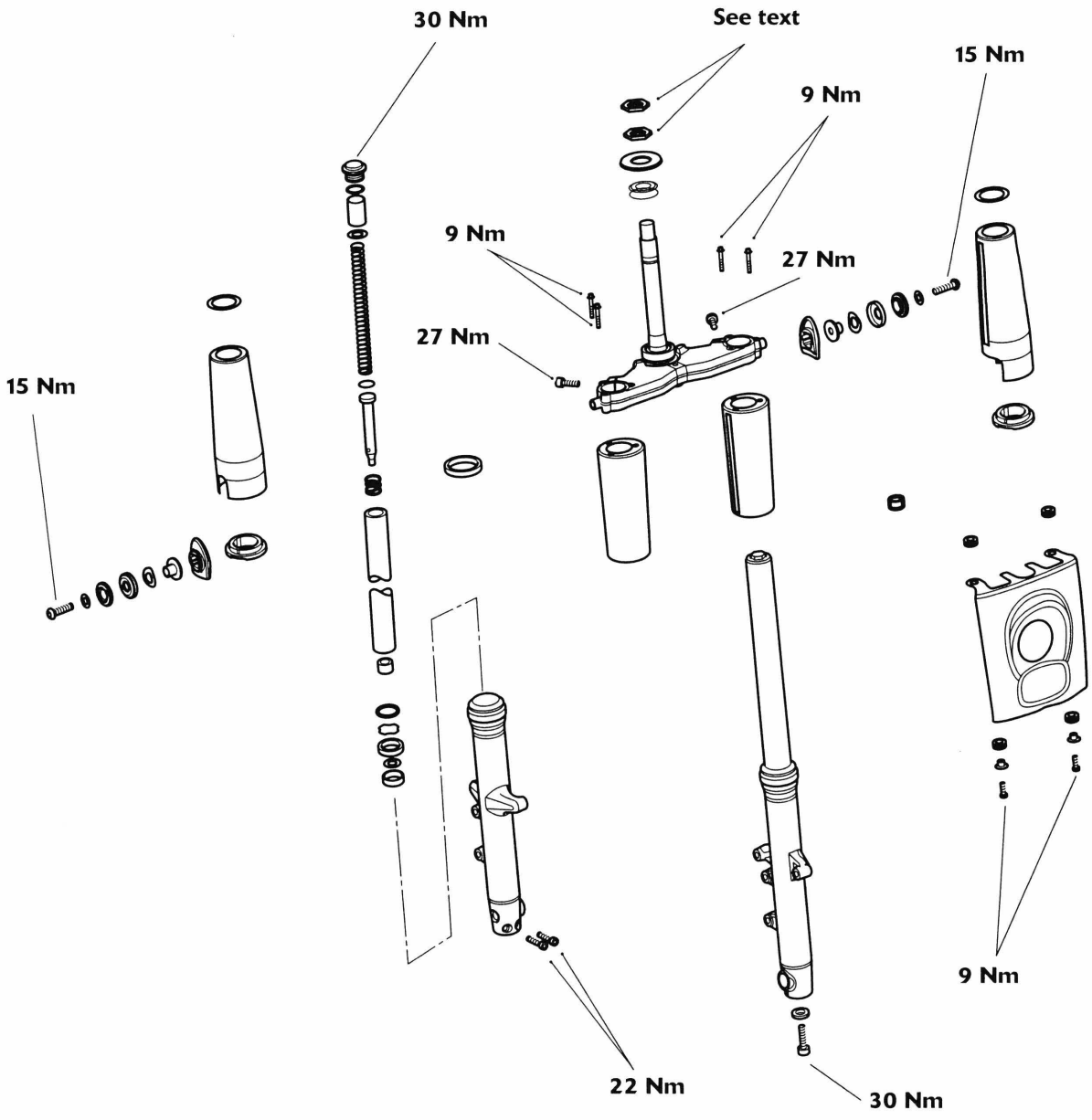

Exploded View - Handlebars - Rocket III up to VIN 241569

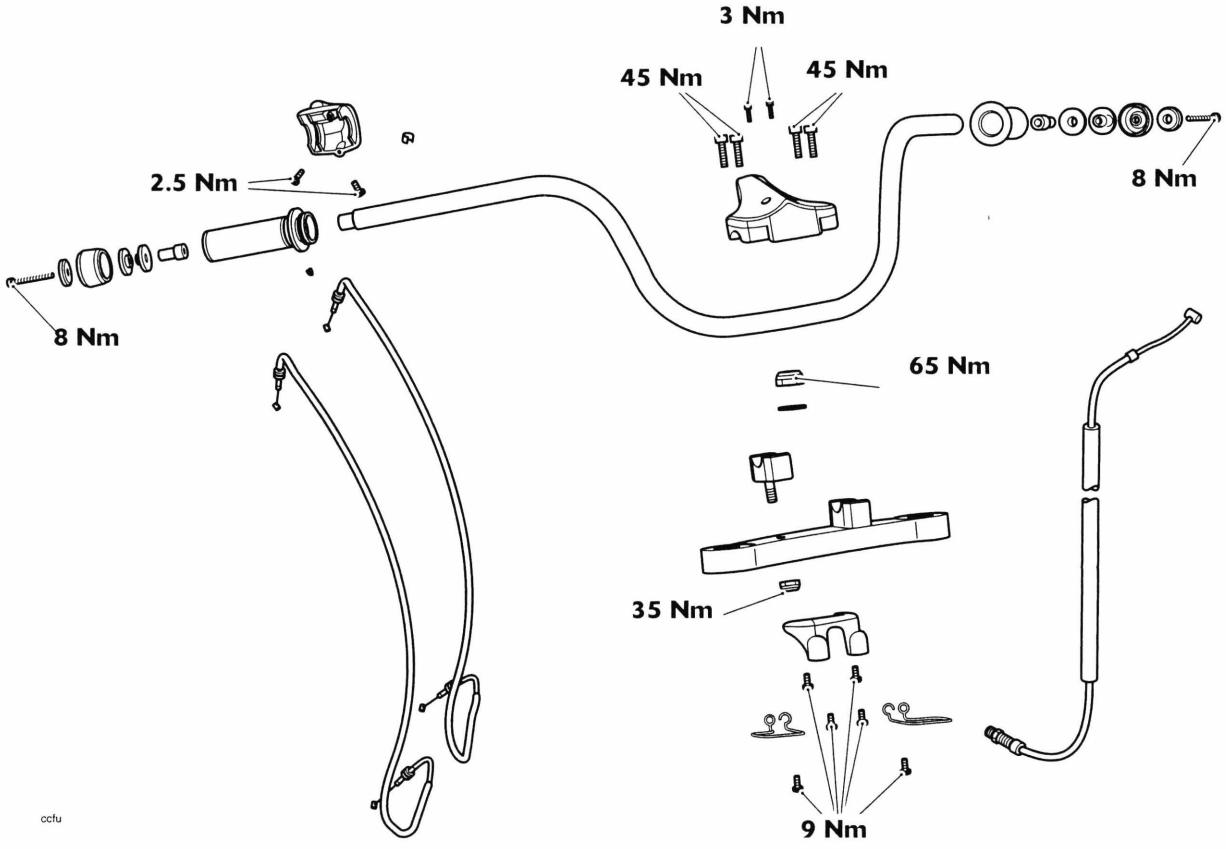

Exploded View - Handlebars - Rocket III, Rocket III Classic and Rocket III Roadster from VIN 241570

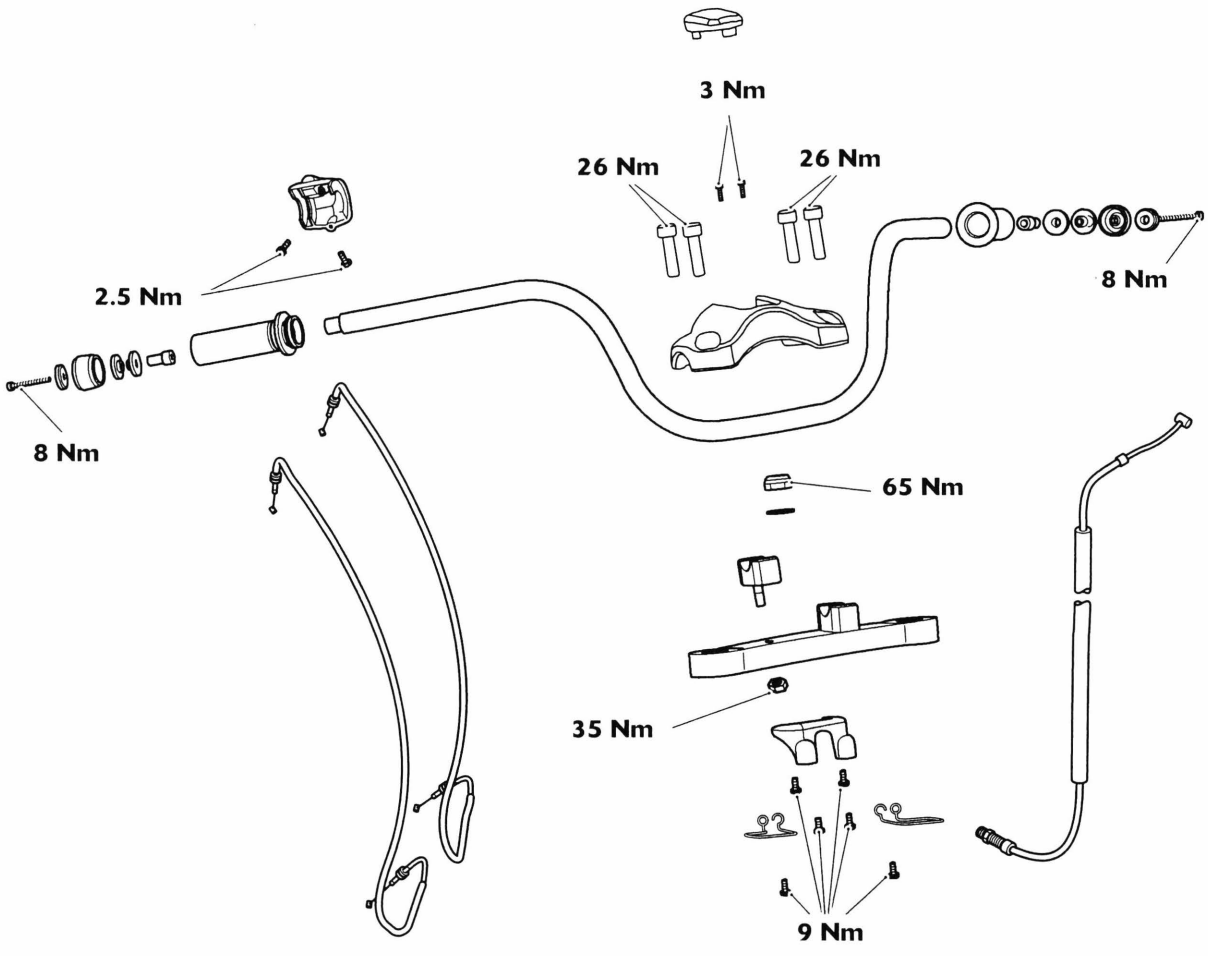

Exploded View - Handlebars - Rocket III Touring

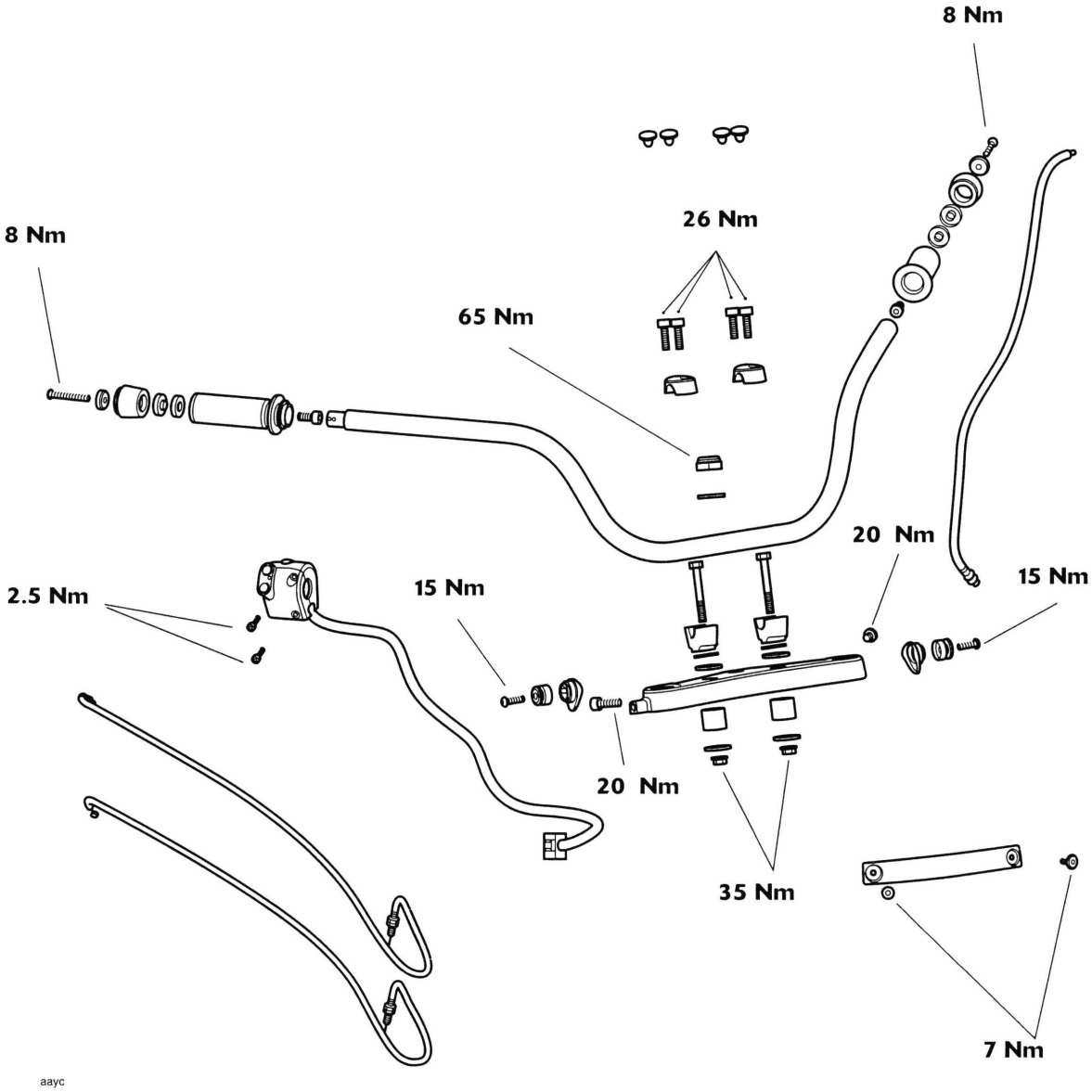

Fork Inspection

Examine each fork for any sign of damage, scratching of the slider surface, or for oil leaks.

If any damage or oil leakage is found consult an authorised Triumph dealer.

Check that the forks operate smoothly as follows:

Position the motorcycle on level ground.

While holding the handlebars and applying the front brake, pump the forks up and down several times.

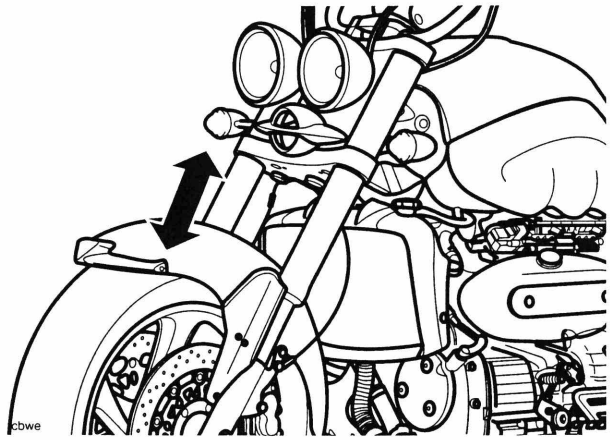

Inspecting Forks

If roughness or excessive stiffness is detected, consult your authorised Triumph dealer.

⚠ Warning

Riding the motorcycle with defective or damaged suspension is dangerous and may lead to loss of motorcycle control and an accident.

Front Fork - Rocket III, Classic and Roadster

Removal

⚠ Warning

Before starting work, ensure the motorcycle is stabilised and adequately supported. This will help prevent it from falling and causing injury to the operator or damage to the motorcycle.

1. Raise and support the front of the motorcycle.
2. Remove the front wheel (see page *16-8*).
3. Detach and support the front brake calipers.

⚠ Warning

Never allow the brake calipers to hang on the brake hoses as this may damage the hoses. A damaged brake hose can cause a reduction in braking efficiency leading to loss of motorcycle control and an accident.

4. Remove the front mudguard (see page *17-24*).

Note:

- **If the forks are to be dismantled, slacken the fork top caps.**

5. Slacken the top yoke clamp bolts.

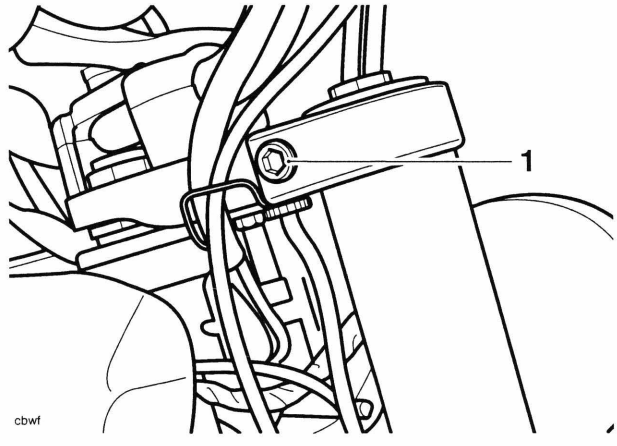

1. Top yoke clamp bolt

⚠ Caution

Care must be taken when removing the forks, to ensure that the outer surfaces do not become scratched.

6. Slacken the bottom yoke clamp bolts and slide the forks out of the yokes.

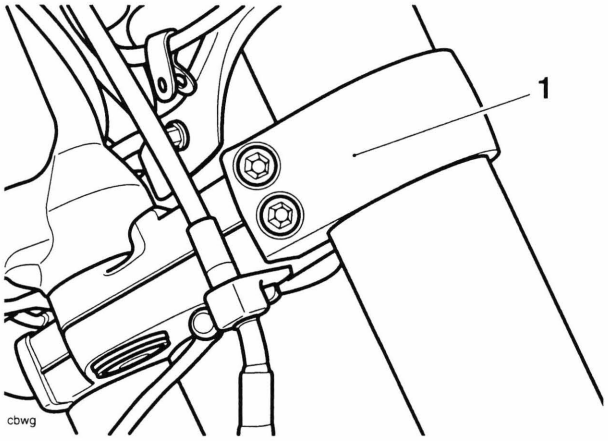

1. Bottom yoke clamp

Installation

1. Position the fork within the yokes so that the lip of the outer tube is flush with the upper surface of the top yoke.

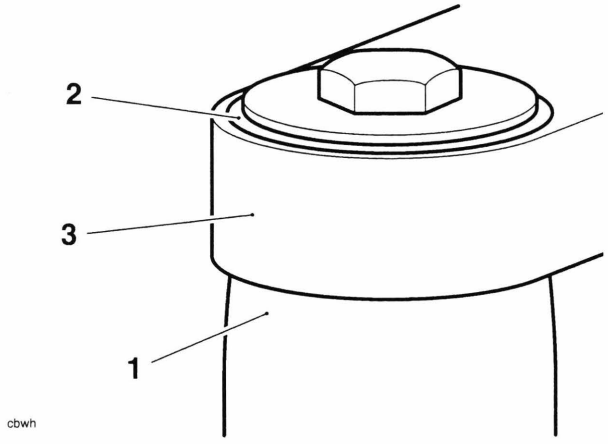

1. Outer tube
2. Outer tube lip
3. Top yoke

2. Tighten the bottom yoke clamp bolts to **25 Nm**.
3. Tighten the top yoke clamp bolt to **20 Nm**.
4. Refit the front mudguard (see page *17-25*).
5. Install the front wheel (see page *16-9*).
6. Refit the front brake calipers, tightening the bolts to **50 Nm**.
7. Lower the motorcycle to the ground and park it on the side stand.

Fork Oil Change - Rocket III, Classic and Roadster

Warning

Before starting work, ensure the motorcycle is stabilised and adequately supported. This will help prevent it from falling and causing injury to the operator or damage to the motorcycle.

1. Remove the forks (see page *13-8*).
2. Secure the fork in a soft jawed vice, gently clamping it on the caliper mounting.

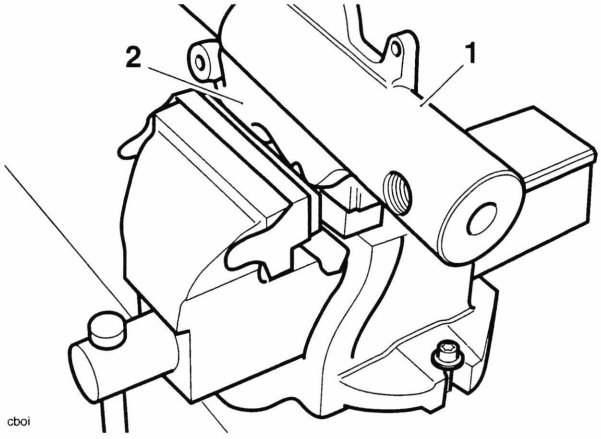

1. Fork
2. Caliper mounting

Warning

Clamping the fork by any point other than the caliper mounting may damage the fork. A damaged fork is dangerous and can cause instability leading to loss of motorcycle control and an accident.

Caution

When securing the fork in a vice, take great care not to over-tighten the vice, as this will cause damage to the fork.

3. Hold the outer tube by hand to prevent it from turning, then unscrew the top cap from the outer tube.

Note:

- **The top cap is not under spring tension and will not spring upwards when the threads disengage.**

4. Remove the fork from the vice and have an assistant stand it upright on the floor.

5. Allow the outer tube to fall into the inner.
6. Fit tool T3880067 over the top cap. Position the two adjustable arms to the holes in the spring spacer. Screw in the arms until they positively engage in the spring spacer holes.

Warning

While compressing the fork spring and while the spring holder is in place always wear protective equipment for the face and eyes and never stand directly above or look directly down onto the fork. If the spring compressor or holder should dislodge or detach, the resulting release of spring tension could cause parts to fly off resulting in injury to the user.

7. Using tool T3880067, manually compress the fork spring and insert the spring holder below the damper locknut.

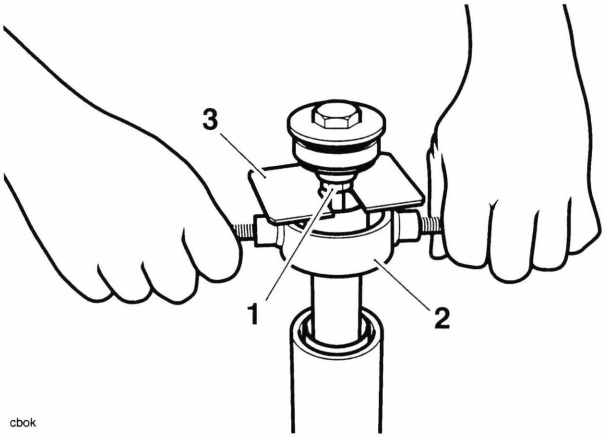

cbok

1. Damper locknut
2. Tool T3880067
3. Spring holder

8. Slacken the locknut, unscrew and remove the top cap. Re-compress the fork spring to remove the holder.

Warning

While re-compressing the fork spring and while the spring holder is in place always wear protective equipment for the face and eyes and never stand directly above or look directly down onto the fork. If the spring compressor or holder should dislodge or detach, the resulting release of spring tension could cause parts to fly off resulting in injury to the user.

9. Remove the spacer, spring cap and spring.

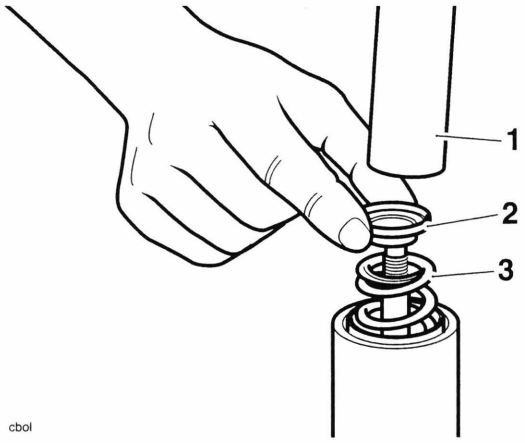

cbol

1. Spacer
2. Spring cap
3. Spring

Note:

- **At this stage of strip-down, the inner and outer tubes can become separated if they are not held together.**

10. Holding both the outer and inner tubes together, invert the fork and pour out the fork oil into a suitable container. Pump the damper rod to remove all oil.

Oil refilling

The oil level specified for Rocket III, Classic and Roadster forks is 89 mm from the upper surface of the fork outer tube, with the springs removed and the fork fully compressed.

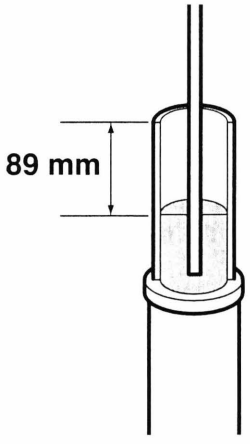

Fork Oil Level (Fork Fully Compressed)

1. Fill the fork with SAE 5W (or Kayaba KHL15-10) fork oil until the oil level is slightly above the recommended level. Alternatively add 667 cc of oil if filling a completely empty fork.
2. Pump the fork assembly and damper several times to expel any trapped air then fully compress the fork and support it in an upright position. Leave the fork for a few minutes to allow the oil level to stabilise.
3. Set the scale on tool 3880160-T0301 to the specified level (dimension A below).

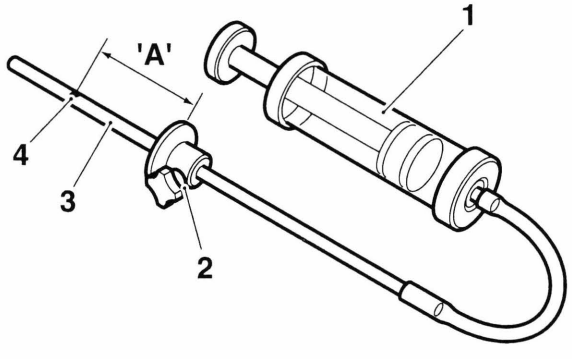

cbyg

1. Tool 3880160-T0301
2. Adjuster plate
3. Scale area
4. Hole (zero position)

Note:

- **Zero level on the tool is set at the small exit hole in the side of the scale tube, NOT AT THE END TIP. Do not attempt to block this side-hole, as this will cause the final fluid level to be incorrect.**

4. Insert the scale end of the tool into the fork inner tube.
5. Hold the tool adjuster plate level with the upper surface of the fork outer tube and draw fluid into the syringe until fluid flow ceases (empty the syringe if the body becomes full before fluid flow stops).
6. The fluid level in the fork is now set to the height set on the tool scale. Check the tool scale setting and repeat the process if incorrectly set.

⚠ Warning

Incorrect oil levels, particularly over filling, can result in damage to the fork seals. Damaged fork seals are a dangerous riding condition that can lead to loss of motorcycle control and an accident.

7. Position the fork assembly as for compression of the fork spring during strip down.
8. Insert the fork spring and spring cap to the outer tube.
9. Attach tool 3880085-T0301 to the threads of the damper rod and pull the damper upwards.

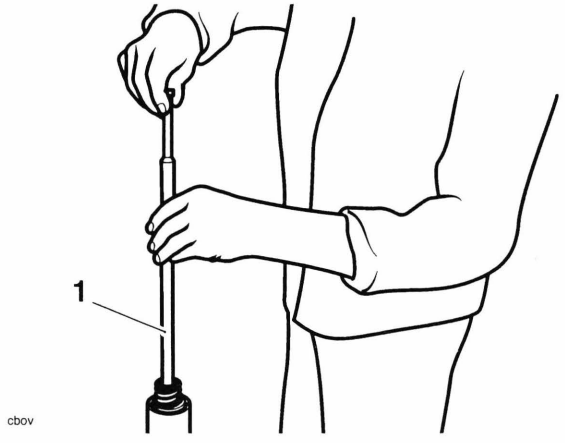

cbov

1. Tool 3880085-T0301

10. Refit the spring spacer.

Warning

While re-compressing the fork spring and while the spring holder is in place always wear protective equipment for the face and eyes and never stand directly above or look directly down onto the fork. If the spring compressor or holder should dislodge or detach, the resulting release of spring tension could cause parts to fly off resulting in injury to the user.

11. Refit tool T3880067 as previously described, compress the fork spring and refit the spring holder.

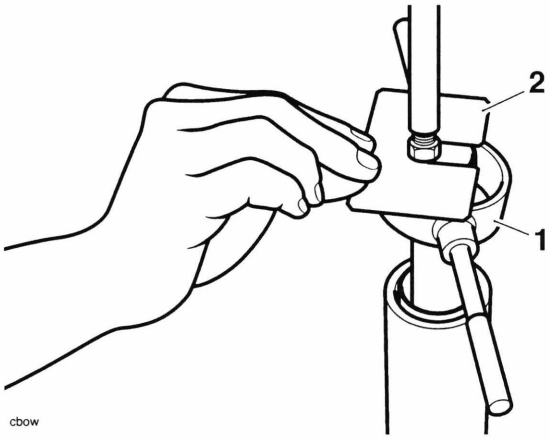

1. Tool T3880067
2. Spring holder

12. Refit the damping rod locknut leaving 15.5 mm of thread and rod exposed above the nut.

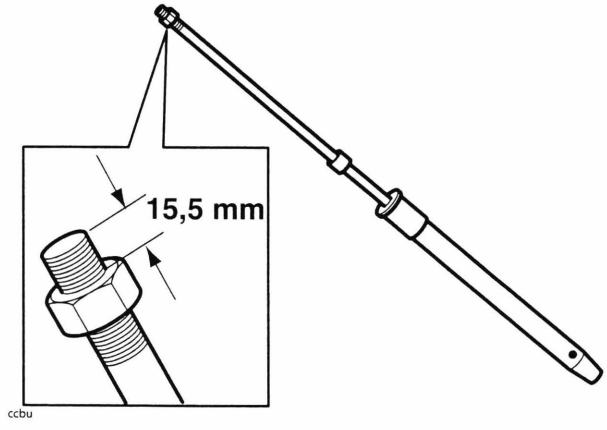

13. Refit the top cap to the damper rod.
14. Hold the top cap while tightening the damper rod locknut to **16 Nm**.

Warning

While re-compressing the fork spring and while the spring holder is in place always wear protective equipment for the face and eyes and never stand directly above or look directly down onto the fork. If the spring compressor or holder should dislodge or detach, the resulting release of spring tension could cause parts to fly off resulting in injury to the user.

15. Re-compress the spring to remove the spring holder.
16. Lubricate the O-ring on the top cap with a smear of fork oil then screw the top cap fully into the inner tube.
17. Tighten the top cap to **30 Nm**.

Note:

- **It is much easier to tighten the top cap when the fork is securely clamped in the bottom yoke.**

Front Fork - Rocket III, Classic and Roadster

Disassembly

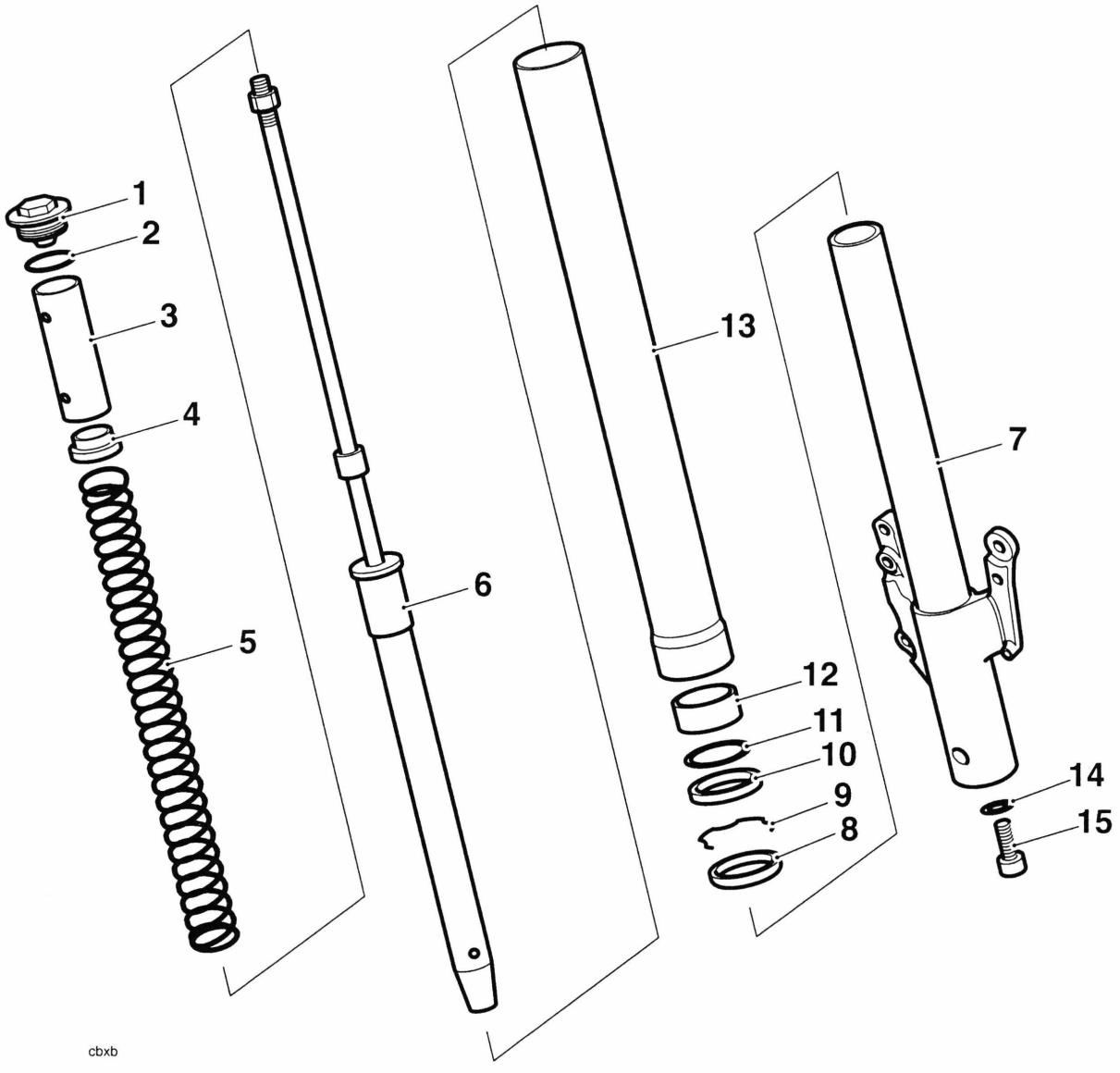

Fork Components

1. Top cap
2. O-ring
3. Spacer
4. Spring seat
5. Spring
6. Damper rod/cylinder
7. Inner tube
8. Dust seal
9. Circlip
10. Oil seal
11. Washer
12. Bush
13. Outer tube
14. Sealing washer
15. Damper rod bolt

Warning

Before starting work, ensure the motorcycle is stabilised and adequately supported. This will help prevent it from falling and causing injury to the operator or damage to the motorcycle.

1. Remove the forks (see page *13-8*).
2. Secure the fork in a soft jawed vice, gently clamping it on the caliper mounting.

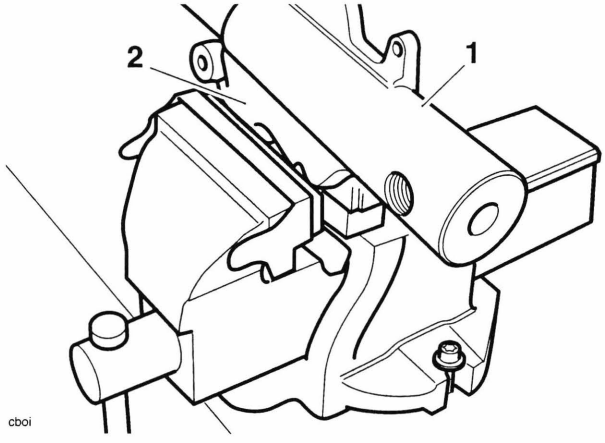

cboi

1. Fork
2. Caliper mounting

Warning

Clamping the fork by any point other than the caliper mounting may damage the fork. A damaged fork is dangerous and can cause instability leading to loss of motorcycle control and an accident.

Caution

When securing the fork in a vice, take great care not to over-tighten the vice, as this will cause damage to the fork.

Note:

- **The fork seals can be renewed without removal of the damping cylinder. Unless removal of the damping cylinder is necessary, omit items 12 and 13.**

3. Unscrew the top cap from the outer tube.

Note:

- **The top cap is not under spring tension.**

4. Remove the fork from the vice and have an assistant stand it upright on the floor.
5. Fit tool T3880067 over the top cap. Position the two adjustable arms to the holes in the spring spacer. Screw in the arms until they positively engage in the spring spacer holes.

Warning

While compressing the fork spring and while the spring holder is in place always wear protective equipment for the face and eyes and never stand directly above or look directly down onto the fork. If the spring compressor or holder should dislodge or detach, the resulting release of spring tension could cause parts to fly off resulting in injury to the user.

6. Using tool T3880067, manually compress the fork spring and insert the spring holder below the damper locknut.

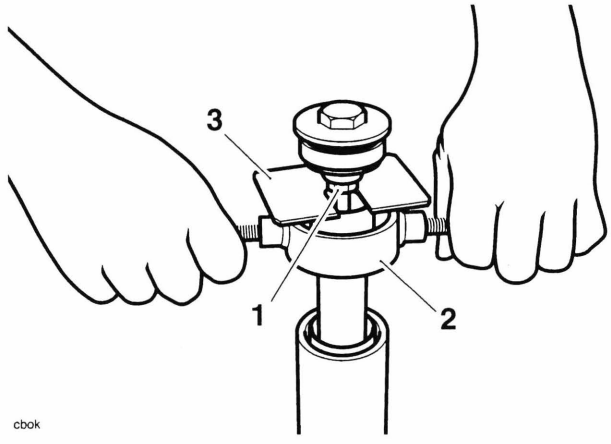

cbok

1. Damper locknut
2. Tool T3880067
3. Spring holder

7. Slacken the locknut, unscrew and remove the top cap. Re-compress the fork spring to remove the holder.

Warning

While re-compressing the fork spring and while the spring holder is in place always wear protective equipment for the face and eyes and never stand directly above or look directly down onto the fork. If the spring compressor or holder should dislodge or detach, the resulting release of spring tension could cause parts to fly off resulting in injury to the user.

8. Remove the spacer, spring cap and spring.

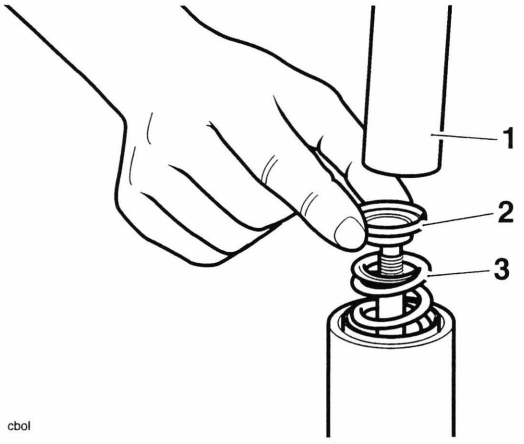

cbol

1. Spacer
2. Spring cap
3. Spring

9. Holding both the outer and inner tubes together, invert the fork and pour out the fork oil into a suitable container. Pump the damper rod to remove all oil.
10. Return the fork to the vice, clamping it as before.
11. Separate the inner and outer tubes leaving the dust and oil seals in place in the outer tube.

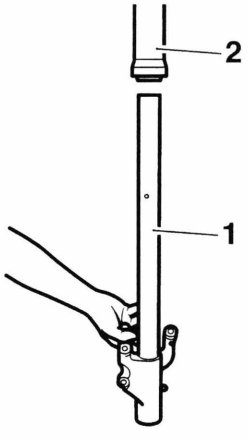

cbom

1. Inner tube
2. Outer tube

12. Remove the damper rod locknut then insert the square end of tool 3990090-T0301 over the damper rod and engage the square in the damping cylinder cup inside the fork. Hold the hexagonal end of the tool to prevent the cylinder from turning while removing the damper bolt from the bottom of the fork.

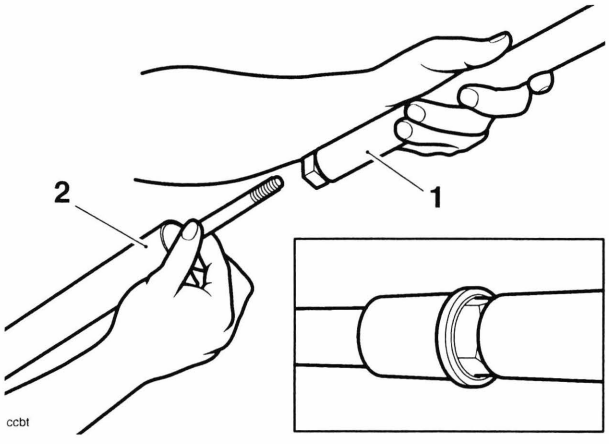

ccbt

1. Tool 3880090-T0301
2. Damping cylinder

13. Remove the tool, then the damping cylinder from the inner tube.

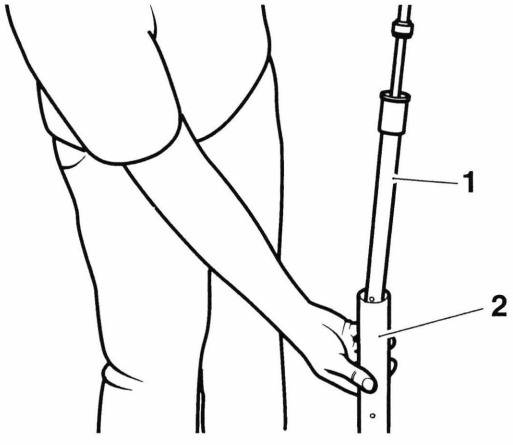

cbon

1. Damping cylinder
2. Inner tube

14. Using finger pressure, remove the dust seal from the outer tube.

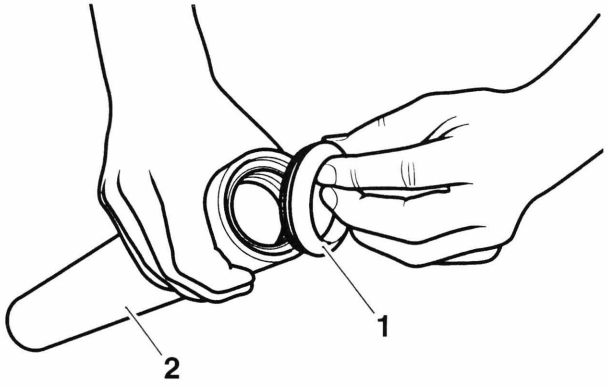

cboo

1. Dust seal
2. Outer tube

15. Remove the circlip from above the seal.

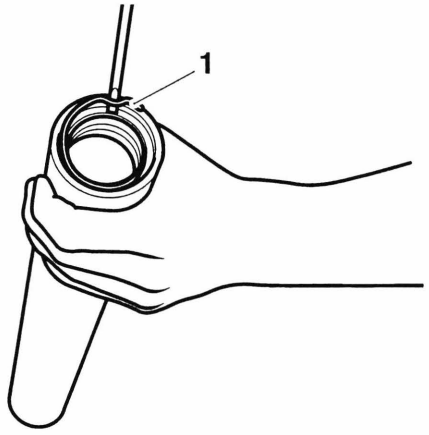

cbop

1. Circlip

16. Note the orientation of the seal lip then, using a soft-faced drift, remove the seal and collect the washer from below it.

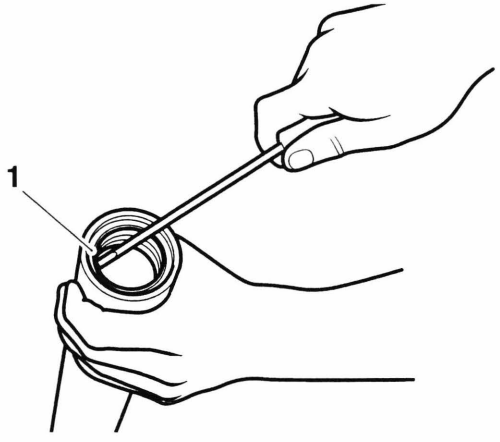

cboq

1. Seal removal

Inspection

1. Inspect the inner tube for stone chips, scoring, scratches, excessive wear and any other damage. Renew the inner tube if necessary.
2. Inspect the spring for damage, cracks and deformation. Renew the spring if necessary.
3. Inspect all bushes and seals for damage. Renew any damaged items if necessary.

Assembly

Warning

The front forks comprise many precision machined parts. Total cleanliness must be observed at all times and, assembly must take place in a dirt/dust-free environment. All parts must be washed in non-flammable solvent before assembly. Dirt ingress may cause damage to the fork parts, leading to instability, loss of motorcycle control and an accident.

Note:

- **If the damper has not been removed, omit operations 6 and 7.**

1. Apply a smear of fork oil to the bushes and seals.
2. Fit the washer to the seal recess in the outer tube.

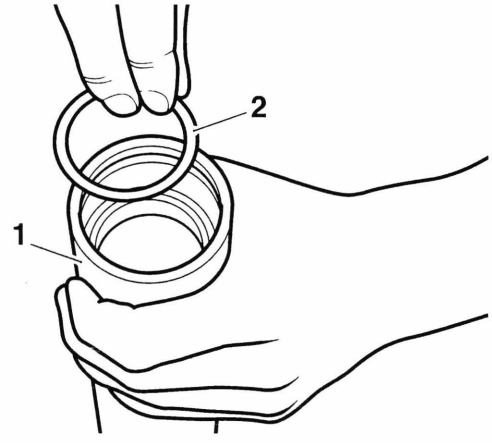

cbor

1. Outer tube
2. Washer

3. Position the seal as noted prior to removal, then position it to the outer tube and drift into place using tool 3880080-T0301. Retain the seal with a new circlip.

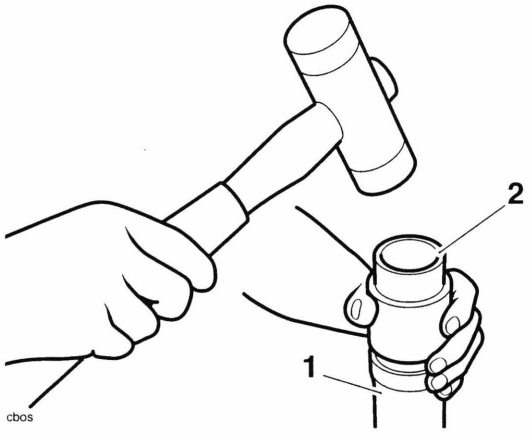

1. Seal
2. Tool 3880080-T0301

4. Refit the dust seal, using finger pressure only.

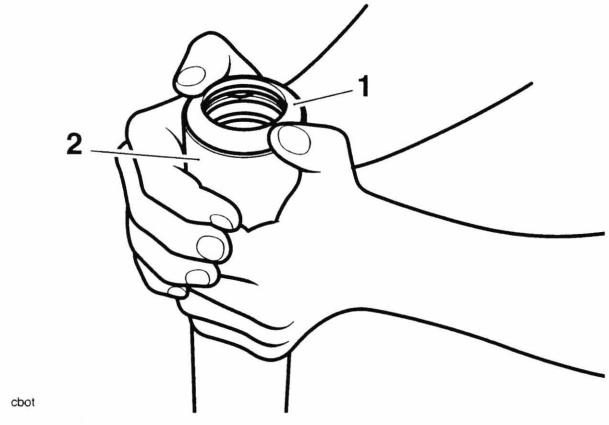

1. Dust seal
2. Outer tube

5. Carefully fit the outer tube to the inner ensuring that the oil and dust seal lips do not become damaged.

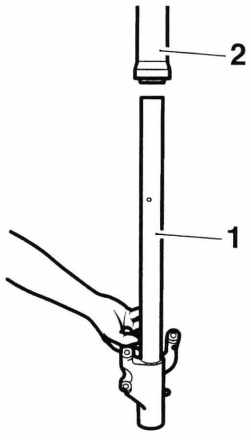

1. Inner tube
2. Outer tube

6. Fit the damper to the inner tube and engage tool 3880090-T0301 to the damper cup (as for removal).
7. Clean the threads of the damping cylinder bolt and fit a new sealing washer. Apply a drop of ThreeBond 1342 to the threads then install the bolt. Prevent the cylinder from turning by holding the hexagonal end of tool 3880090-T0301 while tightening the damping cylinder bolt to **40 Nm**.

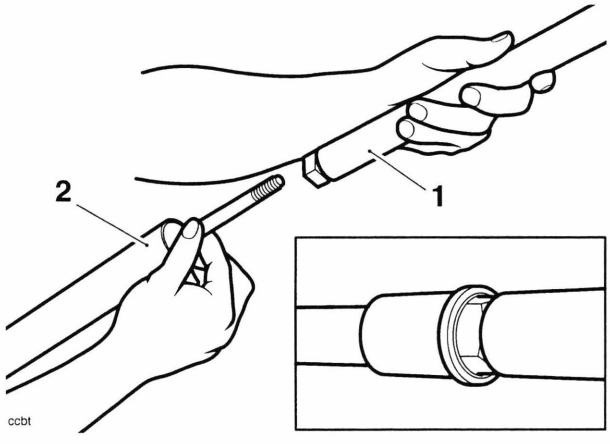

1. Tool 3880090-T0301
2. Cylinder

⚠ Caution

The damping rod locknut must be fitted with the flat side facing to the top of the fork. The slightly tapered side must face the fork spring.

Incorrect orientation may lead to a loosening of the locknut.

8. Refit the damping rod locknut leaving 15.5 mm of thread and rod exposed above the nut.

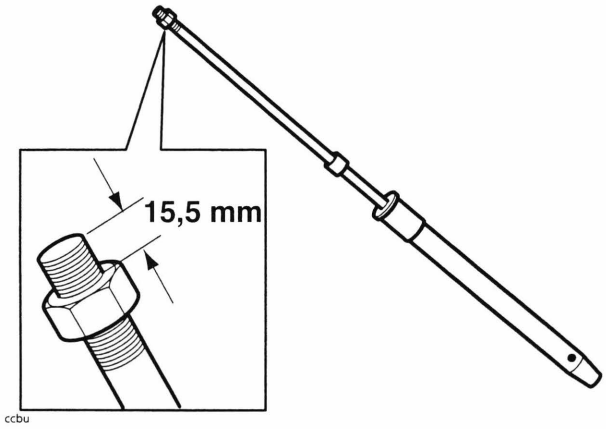

9. Fill the fork with oil (see page *13-11*).
10. Position the assembly as for compression of the fork spring.
11. Insert the fork spring and spring cap to the outer tube.
12. Attach tool 3880085-T0301 to the threads of the damper rod and pull the damper upwards.

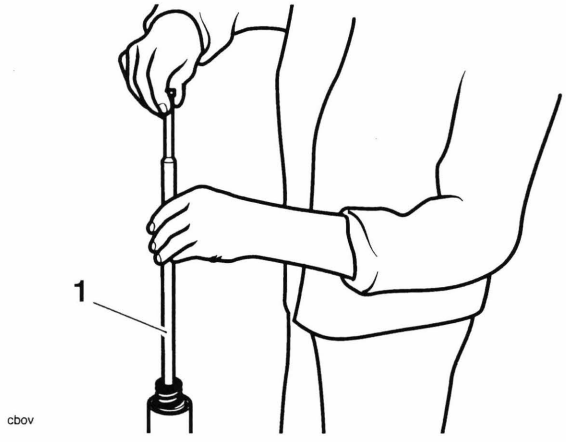

1. Tool 3880085-T0301

13. Refit the spring spacer.

Warning

While re-compressing the fork spring and while the spring holder is in place always wear protective equipment for the face and eyes and never stand or look directly down onto the fork. If the spring compressor or holder should dislodge or detach, the resulting release of spring tension could cause parts to fly off resulting in injury to the user.

14. Refit tool T3880067 to the spring spacer, compress the fork spring and refit the spring holder.

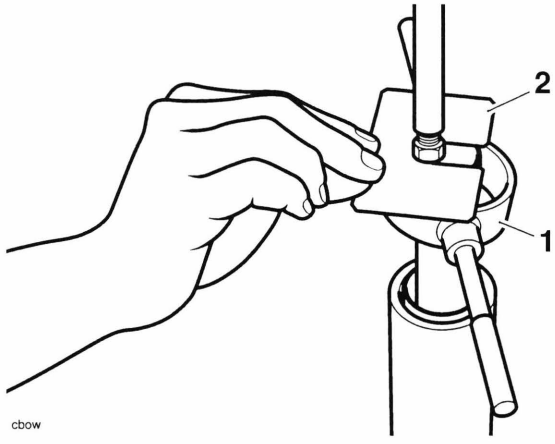

1. Tool T3880067
2. Spring holder

15. Refit the top cap to the damper rod.
16. Hold the top cap while tightening the damper rod locknut to **16 Nm**.

Warning

While re-compressing the fork spring and while the spring holder is in place always wear protective equipment for the face and eyes and never stand or look directly down onto the fork. If the spring compressor or holder should dislodge or detach, the resulting release of spring tension could cause parts to fly off resulting in injury to the user.

17. Re-compress the spring to remove the spring holder.
18. Lubricate the O-ring on the top cap with a smear of fork oil then screw the top cap fully into the inner tube.
19. Tighten the top cap to **23 Nm**.

Note:

- **It is much easier to tighten the top cap when the fork is securely clamped in the bottom yoke.**

20. Install the fork(s) (see page *13-9*).

Steering Head Bearing Check and Adjustment - Rocket III, Classic and Roadster

Warning

Before starting work, ensure the motorcycle is stabilised and adequately supported. This will help prevent it from falling and causing injury to the operator or damage to the motorcycle.

Check

1. Raise and support the motorcycle so that the front wheel is clear of the ground.
2. Move the handlebars from lock-to-lock whilst checking for signs of tight spots or notchiness (bearings over-tightened).
3. Hold the lower end of the front forks and try to move them forward and backward to check for signs of free play in the bearings (bearings insufficiently tightened or worn).

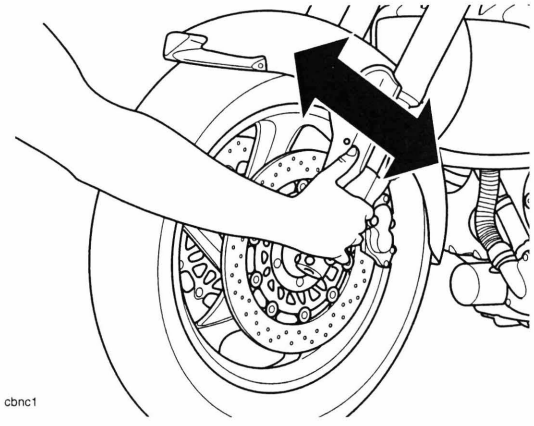

Checking for Free Play in Steering Head Bearings

4. Adjust as described below then lower the motorcycle to the ground.

Adjustment

1. Remove the seat (see page *17-18*).
2. Disconnect the battery, negative (black) lead first.
3. Slacken the top yoke clamp bolts.

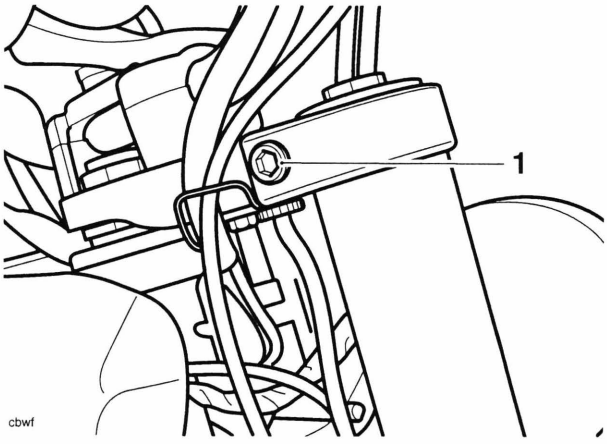

1. Top yoke clamp bolt

Note:

- **Rocket III and Classic models up to VIN 241569 continue from step 4 to step 8. Then continue from page 13.**
- **Rocket III, Classic and Roadster models from VIN 241570 continue from step 9 to step 26.**

Rocket III and Classic models up to VIN 241569

4. Release the two screws securing the upper cover of the handlebar clamp to the lower section.

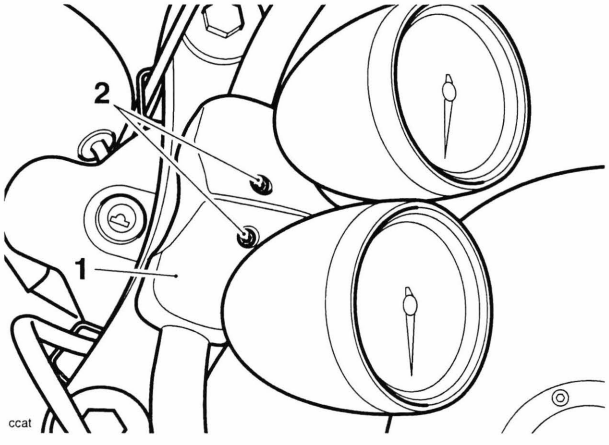

1. Upper cover
2. Screws

5. Pivot the instruments forward to reveal the handlebar clamp bolts.
6. Support the handlebar then unscrew the bolts and lift off the handlebar clamp, together with the instruments. Protect the top of the fuel tank from accidental damage and then lay the instruments and clamp on the fuel tank.

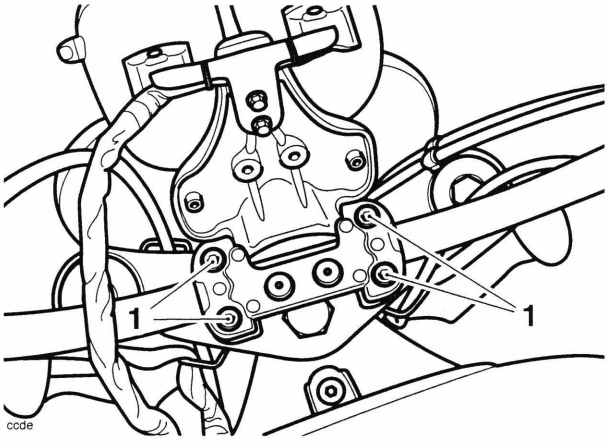

1. Handlebar clamp bolts

7. Position and support the handlebar clear of the top yoke, ensure the master cylinder remains in an upright position.
8. For Rocket III and Classic models up to VIN 241596 continue from step 13.

Rocket III, Classic and Roadster models from VIN 241570

9. Remove the chrome cover from the instrument bracket.

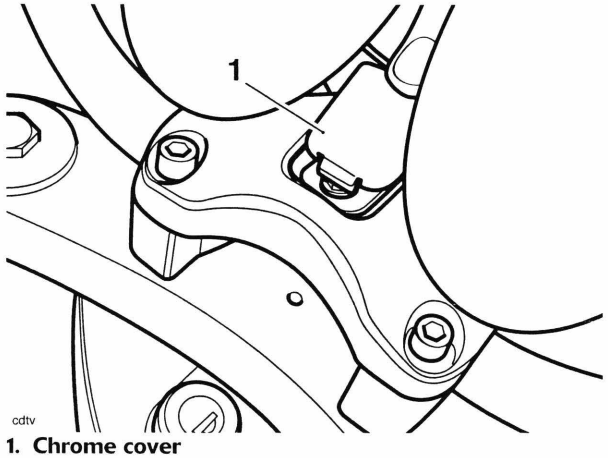

1. Chrome cover

10. Release the two fixings securing the instrument and bracket assembly to the handlebar clamp and slide the instrument assembly free. Protect the motorcycle from damage and position the instruments clear of the handlebar.

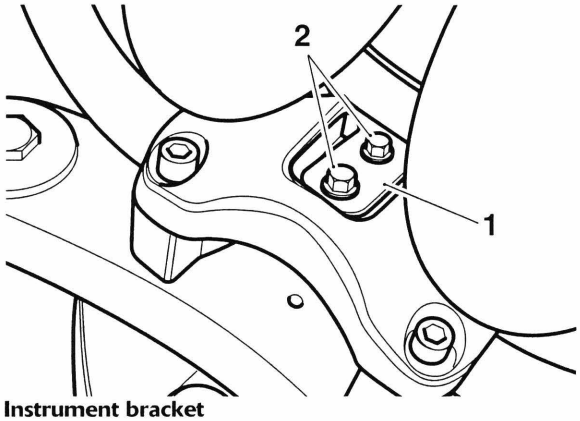

1. Instrument bracket
2. Fixings

11. Support the handlebar then unscrew the four bolts and lift off the handlebar clamp.

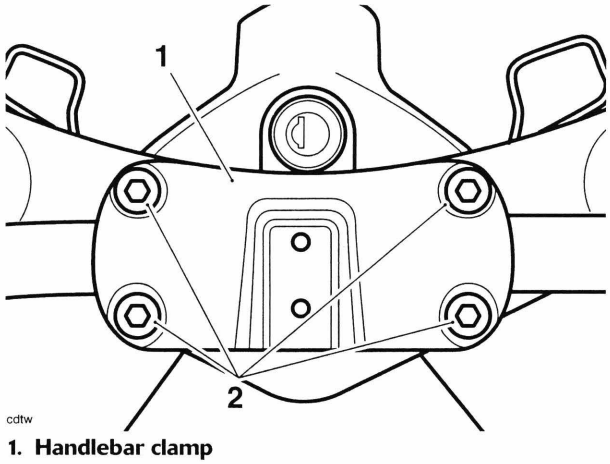

1. Handlebar clamp
2. Fixings

12. Position and support the handlebar clear of the top yoke, ensure the master cylinder remains in an upright position.

All models

Note:

- **When the top yoke is removed (below), the steering lock and headlights will also be removed as part of the assembly.**

13. Slacken and remove the top nut and washer. Lift and support the top yoke and headlight assembly to gain access to the bearing adjuster nut and locknut.

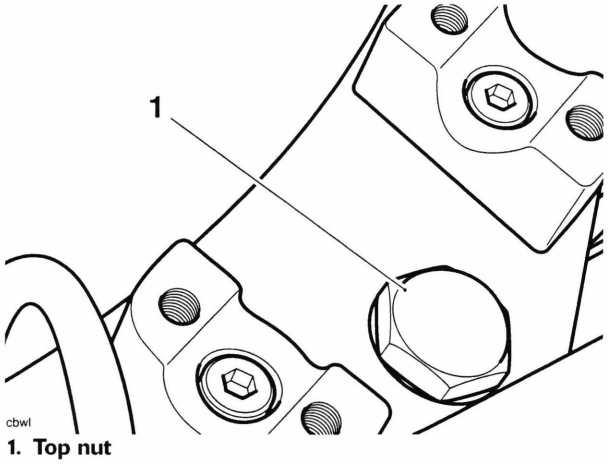

1. Top nut

14. Slacken the locknut and adjuster nut.

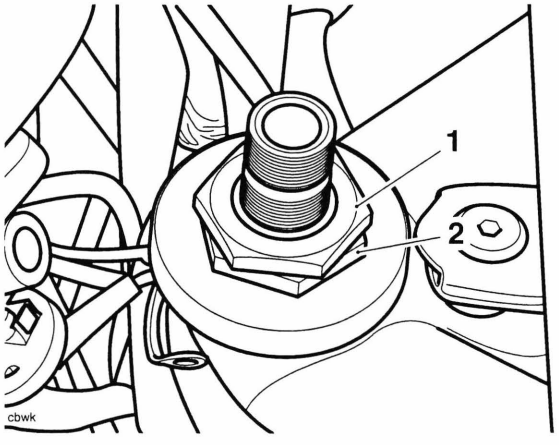

1. Locknut
2. Adjuster nut

15. Adjust the bearing free play as follows:
    a) Tighten the adjuster nut to **40 Nm**.
    b) Slacken the adjuster nut fully.
    c) Re-tighten the adjuster nut to **6 Nm**.
    d) Loosen the adjuster nut by **90°**. Note that there will now be free play present.
    e) Hold the adjuster nut in that position while tightening the locknut to **40 Nm**.

Note:

- **Ensure the adjuster nut does not move as the locknut is tightened.**

16. Seat the top yoke assembly in position then refit the washer and top nut, tightening it to **65 Nm**.

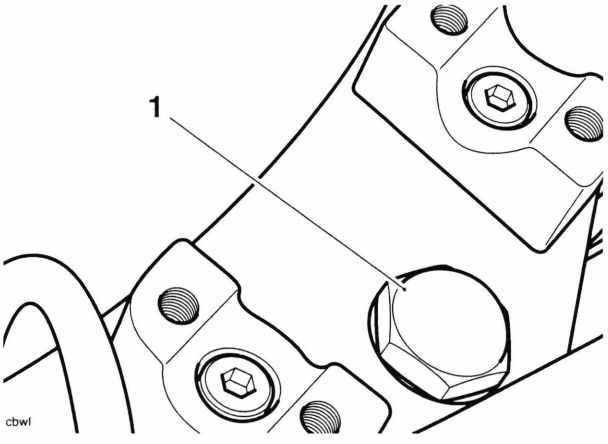

1. Top nut

17. Tighten the top yoke clamp bolts to **20 Nm**.
18. Align the handlebar punch mark with the lower-rear inner left hand split line of the clamp.
19. **Rocket III and Classic models up to VIN 241569:** Tighten the front clamp bolts to **26 Nm**, then the rears.

20. **Rocket III, Classic and Roadster models from VIN 241570:** Tighten the front clamp bolts to **26 Nm**, then the rears.

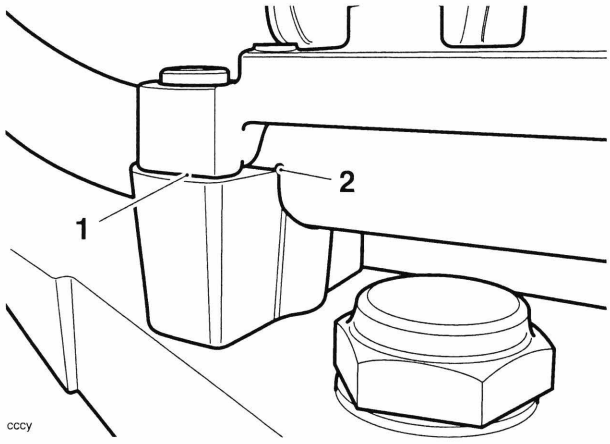

1. Clamp split line
2. Handlebar punch mark

21. **Rocket III and Classic models up to VIN 241569:** Pivot the instruments into position then fit and tighten the cover bolts to **3 Nm**.
22. **Rocket III, Classic and Roadster models from VIN 241570:** Position the instrument and bracket assembly to the handlebar clamp and secure with the two screws. Tighten the screws to **9 Nm**.
23. Fit the chrome cover to the instrument bracket.
24. **All models:** Check that the free play has been eliminated and that the steering can be turned freely from lock to lock without any sign of tightness. Re-adjust if necessary.

Warning

Operation of the motorcycle with incorrectly adjusted steering head bearings, either too loose or too tight, may cause a dangerous riding condition leading to loss of motorcycle control and an accident.

25. Reconnect the battery, positive (red) lead first.
26. Refit the seat (see page *17-19*).

Bottom Yoke and Headstock Bearings - Rocket III, Classic and Roadster

Yoke Removal

Warning

Before starting work, ensure the motorcycle is stabilised and adequately supported. This will help prevent it from falling and causing injury to the operator or damage to the motorcycle.

1. Remove both forks (see page *13-8*).
2. Release the brake hose bracket from the bottom yoke.

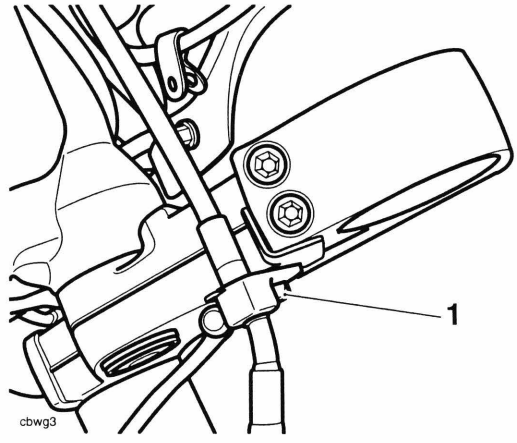

1. Brake hose bracket fixing

Note:

- **Rocket III and Classic models up to VIN 241569 continue from step 3 to step 7. Then continue from step 12 to step 14.**
- **Rocket III, Classic and Roadster models from VIN 241570 continue from step 8 to step 14.**

Rocket III and Classic models up to VIN 241569

3. Release the two screws securing the upper cover of the handlebar clamp to the lower section.

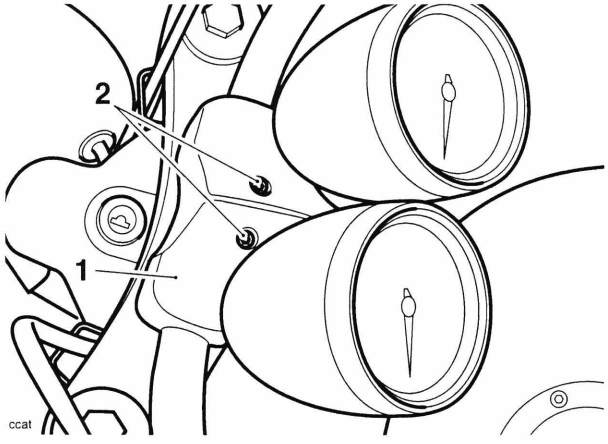

1. Upper cover
2. Screws

4. Pivot the instruments forward to reveal the handlebar clamp bolts.
5. Support the handlebar then unscrew the bolts and lift off the handlebar clamp, together with the instruments. Protect the top of the fuel tank from accidental damage and then lay the instruments and clamp on the fuel tank.

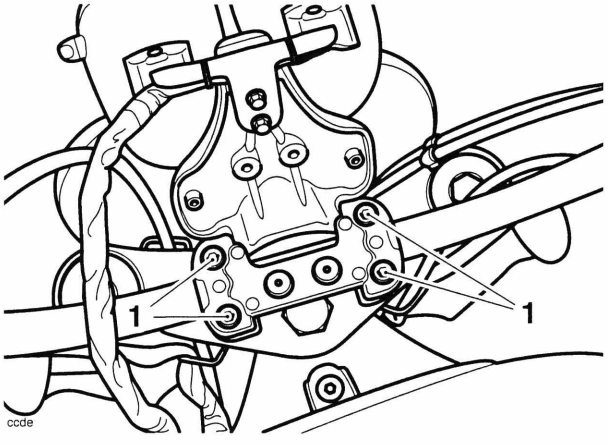

1. Handlebar clamp bolts

6. Position and support the handlebar clear of the top yoke, ensure the master cylinder remains in an upright position.
7. For Rocket III and Classic models up to VIN 241569 continue from step 12.

Rocket III, Classic and Roadster models from VIN 241570

8. Remove the chrome cover from the instrument bracket.

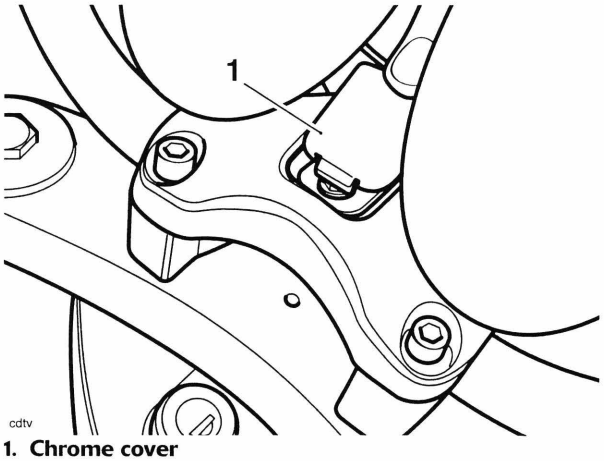

1. Chrome cover

9. Release the two fixings securing the instrument and bracket assembly to the handlebar clamp and slide the instrument assembly free. Protect the motorcycle from damage and position the instruments clear of the handlebar.

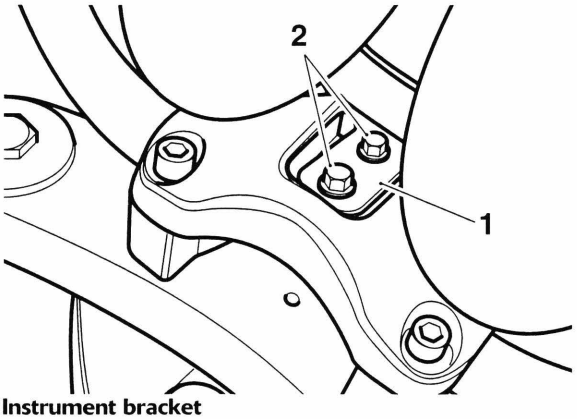

1. Instrument bracket
2. Fixings

10. Support the handlebar then unscrew the bolts and lift off the handlebar clamp.

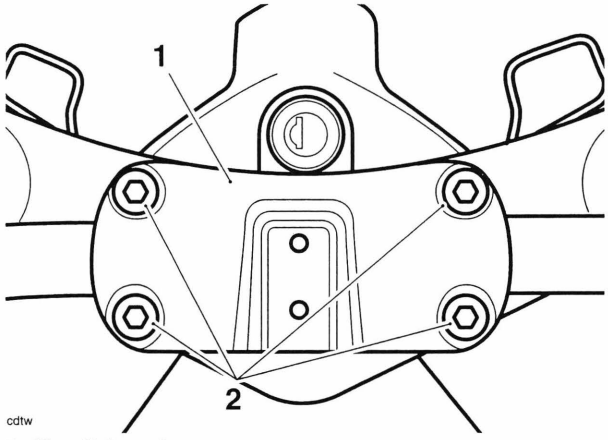

1. Handlebar clamp
2. Fixings

11. Position and support the handlebar clear of the top yoke, ensure the master cylinder remains in an upright position.

All models

Note:

- **When the top yoke is removed (below), the steering lock and headlights will also be removed as part of the assembly.**

12. Slacken and remove the top nut and washer. Lift and support the top yoke and headlight assembly to gain access to the bearing adjuster nut and locknut.

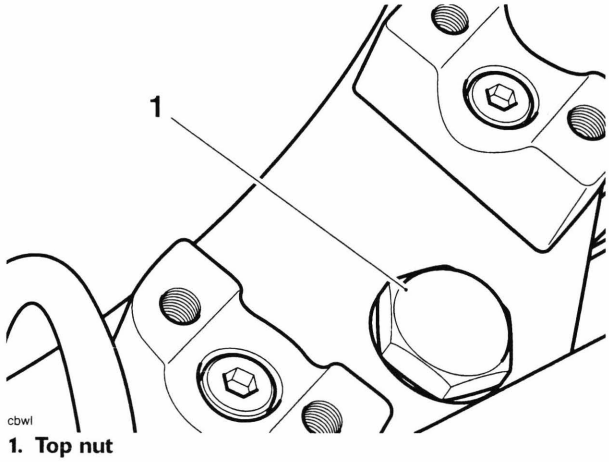

1. Top nut

13. Remove the locknut and adjuster nut.

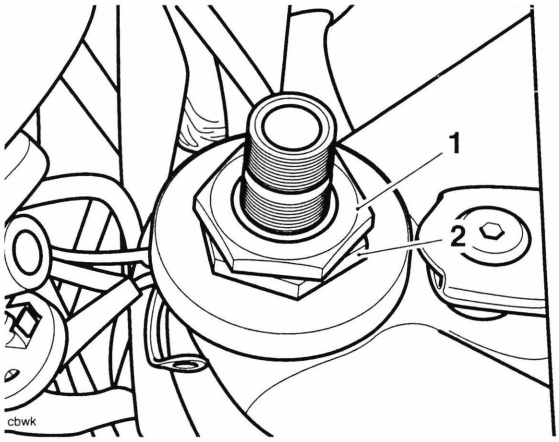

1. Locknut
2. Adjuster nut

14. Detach the bottom yoke from below the frame headstock.

Bearing removal

1. Using a suitable drift, evenly and progressively drive the bearing outer races from the frame headstock.
2. Remove the inner race and dust seal from the bottom yoke using a press or puller.

⚠ Caution

Protect the threads of the bottom yoke when using a press or puller as damaged threads may mean replacing the yoke completely.

Installation

3. Press a new inner race onto the steering stem of the bottom yoke.

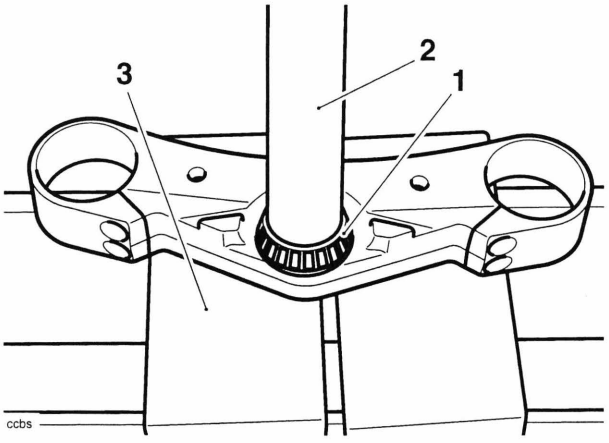

1. Bearing
2. Press
3. Press bed

4. Evenly and progressively drive new bearing outer races into the frame headstock.

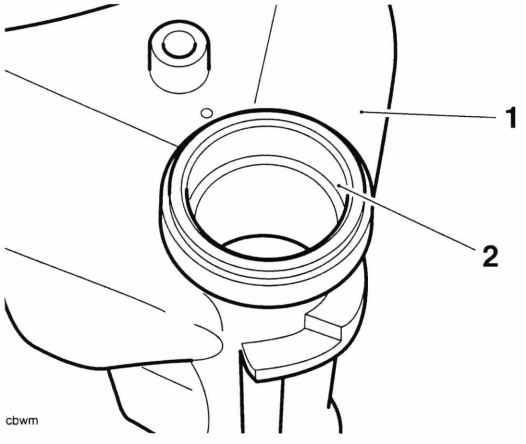

1. Headstock
2. Bearing outer race

5. Lubricate the headstock bearings using multi-purpose grease.
6. Insert the lower yoke to the frame headstock, fit the upper bearing and retain with the bearing cover, adjuster nut and locknut.
7. Adjust the bearing free play as follows:
   a) Tighten the adjuster nut to **40 Nm**.
   b) Slacken the adjuster nut fully.
   c) Re-tighten the adjuster nut to **6 Nm**.
   d) Loosen the adjuster nut by **90°**. Note that there will now be free play present.
   e) Hold the adjuster nut in that position while tightening the locknut to **40 Nm**.

Note:

- **Ensure the adjuster nut does not move as the locknut is tightened.**

8. Refit the brake hose bracket to the bottom yoke. Tighten the fixing to **12 Nm**.

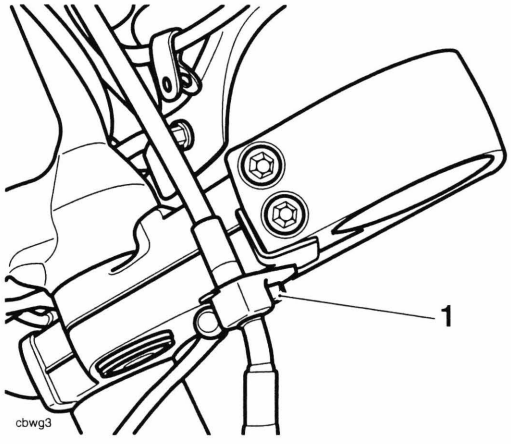

1. Brake hose fixing

Note:

- **For the alignment of the top yoke, do not tighten the top nut.**

9. Seat the top yoke assembly in position then refit the washer and top nut. Do not fully tighten the top nut.

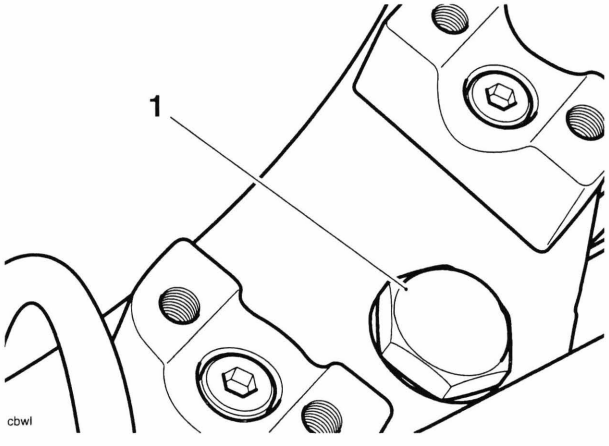

1. Top nut

Note:

- **For the alignment of the top yoke, do not tighten the top yoke clamp bolt.**

10. Position the forks within the bottom and top yokes. Tighten only the bottom yoke clamp bolts enough to hold the forks in position.
11. Tighten the top yoke top nut to **65 Nm**.

12. Slacken the bottom yoke clamp bolts and reposition the forks so that the lip of the outer tube is flush with the upper surface of the top yoke.

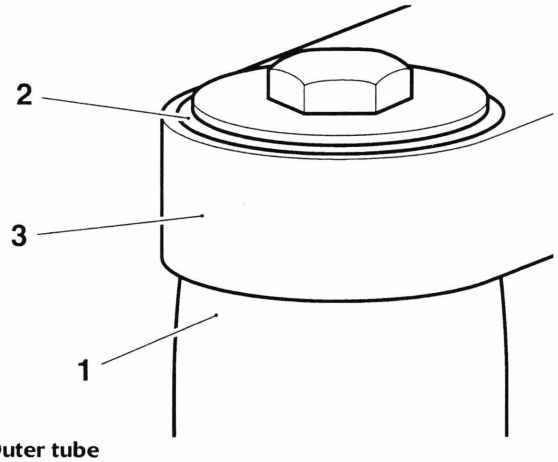

cbwh

1. Outer tube
2. Outer tube lip
3. Top yoke

13. Tighten the bottom yoke clamp bolts to **25 Nm**.
14. Tighten the top yoke clamp bolt to **20 Nm**.
15. Align the handlebar punch mark with the lower-rear inner left hand split line of the clamp.
16. **Rocket III and Classic models up to VIN 241569:** Tighten the front clamp bolts to **26 Nm**, then the rears.
17. **Rocket III, Classic and Roadster models from VIN 241570:** Tighten the front clamp bolts to **45 Nm**, then the rears.

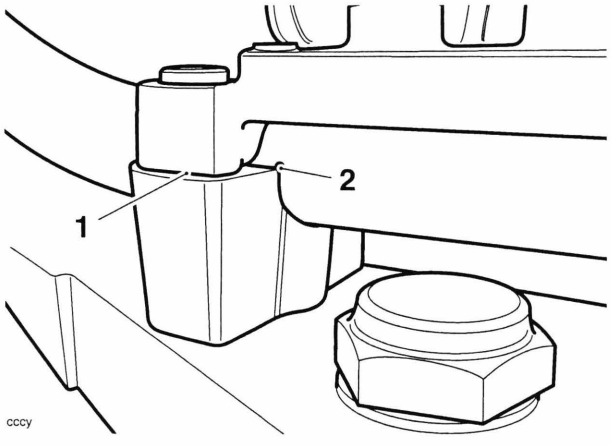

cccy

1. Clamp split line
2. Handlebar punch mark

18. **Rocket III and Classic models up to VIN 241569:** Pivot the instruments into position then fit and tighten the cover bolts to **3 Nm**.
19. **Rocket III, Classic and Roadster models from VIN 241570:** Position the instrument and bracket assembly to the handlebar clamp and secure with the two screws. Tighten the screws to **9 Nm**.
20. Fit the chrome cover to the instrument bracket.
21. **All models:** Refit the front mudguard (see page *17-26*).
22. Install the front wheel (see page *16-9*).
23. Refit the front brake calipers, tightening the bolts to **50 Nm**.
24. Check that the free play has been eliminated and that the steering can be turned freely from lock to lock without any sign of tightness. Re-adjust if necessary.

⚠ Warning

Operation of the motorcycle with incorrectly adjusted steering head bearings, either too loose or too tight, may cause a dangerous riding condition leading to loss of motorcycle control and an accident.

25. Reconnect the battery, positive (red) lead first.
26. Refit the seat (see page *17-19*).

Front Fork - Rocket III Touring

Removal

Warning

Before starting work, ensure the motorcycle is stabilised and adequately supported. This will help prevent it from falling and causing injury to the operator or damage to the motorcycle.

1. Raise and support the front of the motorcycle.
2. Remove the seat (see page *17-19*).
3. Disconnect the battery, negative (black) lead first.
4. Remove the windscreen (see page *17-33*).
5. Remove the front wheel (see page *16-10*).
6. Remove the front mudguard (see page *17-25*).
7. Release the three fixings securing the instrument assembly to the fuel tank.

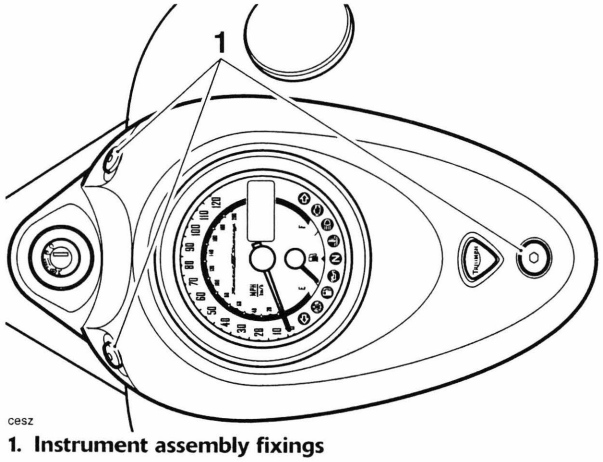

cesz

1. Instrument assembly fixings

8. Protect the top of the fuel tank from accidental damage and position the instrument assembly clear of the top yoke.

Note:

- **If the forks are to be dismantled, slacken the fork top cap (at the top of the fork) and the damping cylinder securing bolt (at the bottom of the fork). Then lightly tighten the damping cylinder securing bolt to prevent fluid loss before releasing the yoke clamps.**

9. Slacken the top yoke clamp bolts.

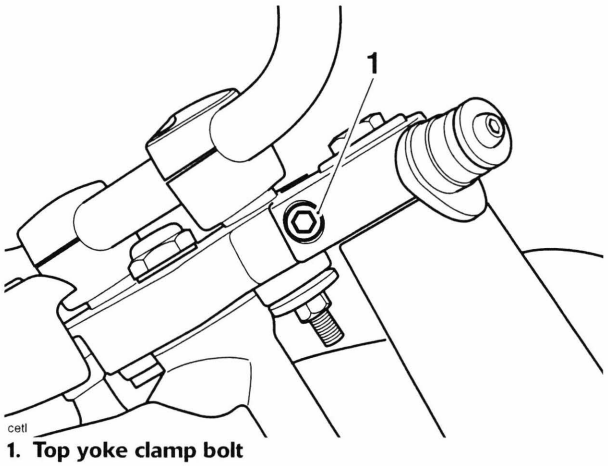

cetl

1. Top yoke clamp bolt

Note:

- **Make a note of the cable routings behind the cable guide.**

10. Release the two screws and remove the cable guide.

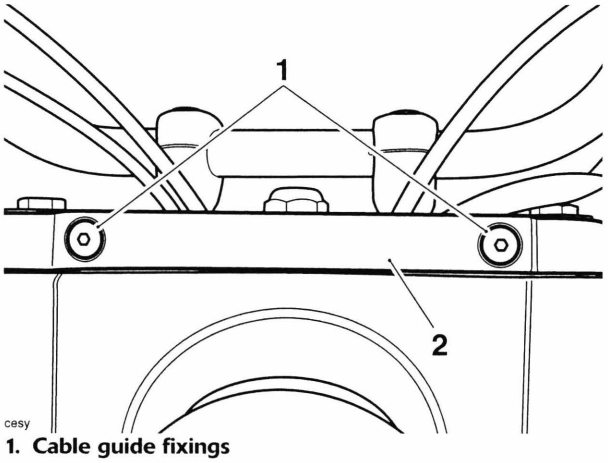

cesy

1. Cable guide fixings
2. Cable guide

11. Remove the handlebar (see page *17-37*).
12. Slacken and remove the top nut and washer. Lift and remove the top yoke.

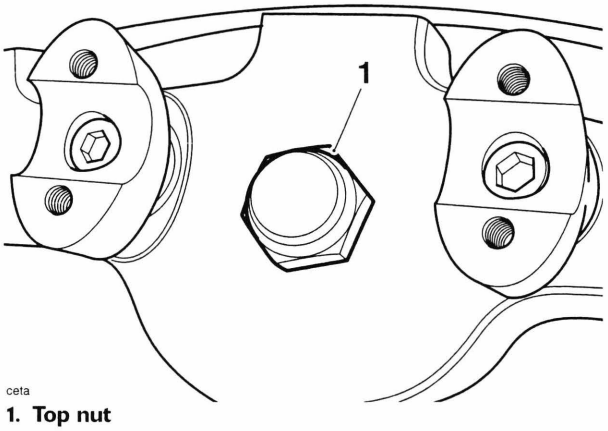

ceta

1. Top nut

13. Note the position of the upper grommet. Slide the fork upper shroud up and remove from the fork.

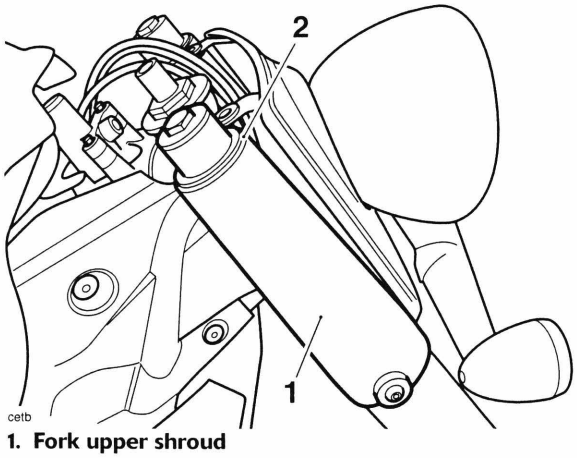

1. Fork upper shroud
2. Shroud upper grommet

Caution

Care must be taken when removing the forks, to ensure that the outer surfaces do not become scratched.

14. Slacken the bottom yoke clamp bolt and slide the fork down out of the bottom yoke.

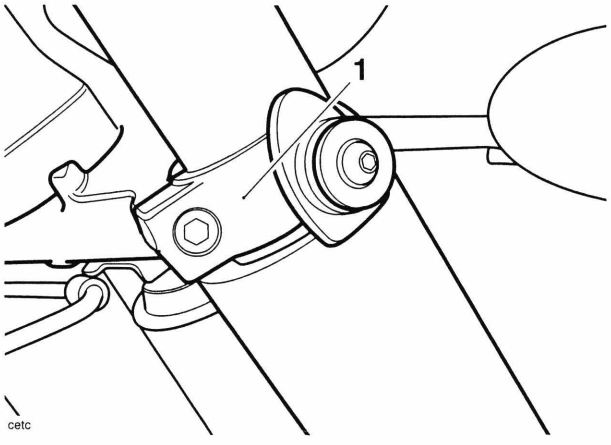

1. Bottom yoke clamp

Installation

Note:

- **The position of the fork is measured from the upper surface of the bottom yoke to the top of the fork tube, not the top of the fork cap.**

1. Position the fork within the bottom yoke. Measure from the top machined surface of the bottom yoke to the top of the fork tube a distance of 240 mm. Tighten the bottom yoke clamp bolt to **27 Nm**.

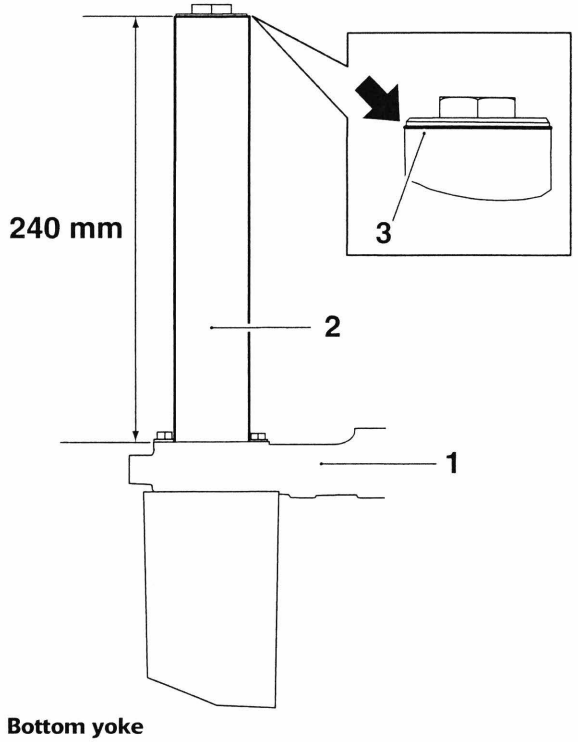

1. Bottom yoke
2. Fork tube
3. Top of fork tube

2. Refit the fork upper shroud. Ensure the upper grommet is correctly located.
3. Refit the top yoke and tighten the top nut to **65 Nm**.

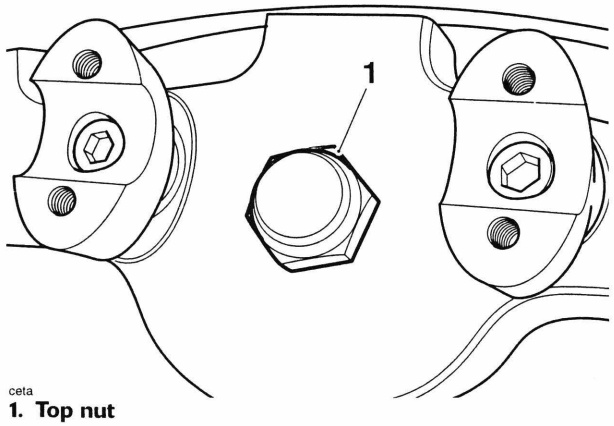

1. Top nut

4. Check that the lip of the fork tube is flush with the upper surface of the top yoke. If it is not, check the distance from the top of the bottom yoke to the top of the fork tube and adjust if necessary (see step 1).

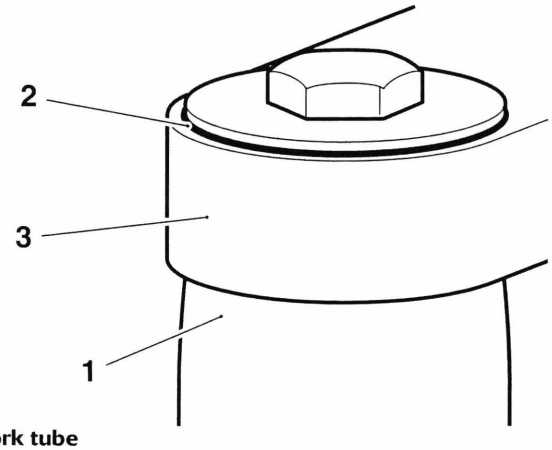

1. Fork tube
2. Fork tube lip
3. Top yoke

5. Tighten the top yoke clamp bolts to **20 Nm**.
6. If the fork top cap has been loosened, tighten to **30 Nm**.
7. Refit the instrument assembly and tighten the fixings to **7 Nm**.
8. Refit the handlebar (see page *17-38*).
9. Position the cables as noted when the cable guide was removed.
10. Refit the cable guide and tighten the fixings to **7 Nm**.
11. Refit the windscreen (see page *17-33*).
12. Refit the front mudguard (see page *17-21*).
13. Refit the front wheel (see page *16-11*).
14. Lower the motorcycle to the ground and park it on the side stand.
15. Reconnect the battery, positive (red) lead first.
16. Refit the seat (see page *17-19*).

Fork Oil Change - Rocket III Touring

Oil draining

1. Remove the fork assembly (see page *13-27*).
2. Secure the fork inner tube upright in a soft jawed vice.

Caution

When securing the fork in a vice, take great care not to overtighten the vice as this will cause the fork tube to distort beyond repair.

3. Carefully unscrew the top cap from the inner tube.

Warning

The top cap is under pressure from the fork spring. As the last few threads of the cap are unscrewed, keep the cap pushed firmly into the tube to prevent it being forcibly expelled as the threads release. To prevent injury, always wear eye, face and hand protection when removing the top cap.

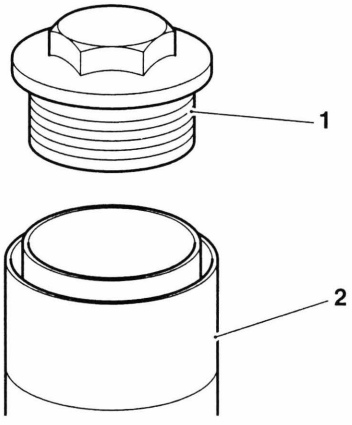

T908.11.05

1. Top cap
2. Fork tube

4. Remove the spacer and spring seat.

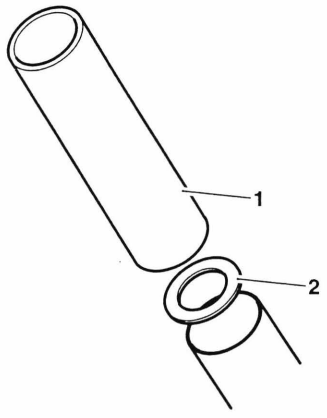

1. Spacer
2. Spring seat

5. Lift out the spring.

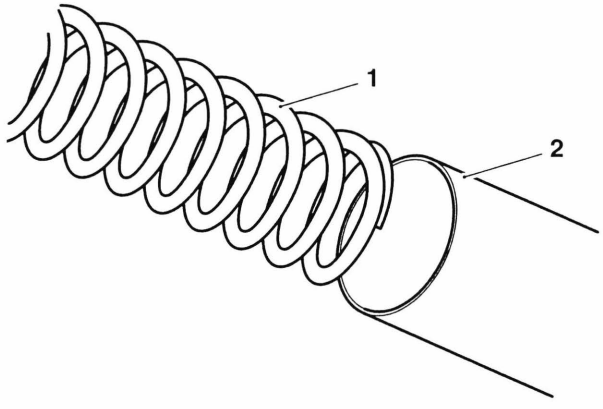

1. Spring
2. Fork tube

6. Invert the fork and pour out the fork oil into a suitable container. Pump the fork assembly to remove all oil.

Oil refilling

Note:

- **The oil level specified for Rocket III Touring is 110 mm from the upper surface of the fork inner tube, with the spring removed and the fork fully compressed.**

Warning

Any variation from the figures quoted above could result in an unsafe riding condition leading to loss of motorcycle control and an accident.

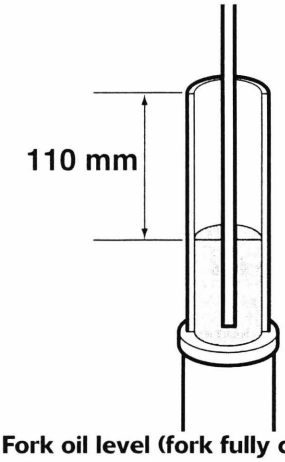

Fork oil level (fork fully compressed)

7. Upright the fork and fill the fork with Kayaba KHL34-G10 (SAE 10W) fork oil until the oil level is slightly above the recommended level.
8. Pump the fork assembly several times to expel any trapped air then fully compress the fork and support it in an upright position. Leave the fork for a few minutes to allow the oil level to stabilise.

9. Set the scale on tool 3880160–T0301 to the specified level.

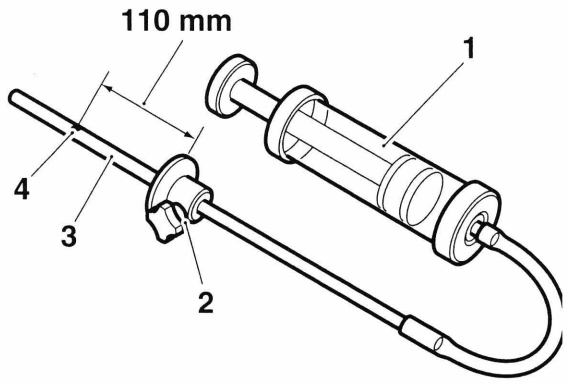

ccha3

1. Tool 3880160–T0301
2. Adjuster plate
3. Scale area
4. Hole (zero position)

Note:

- **Zero level on the tool is set at the small exit hole in the side of the scale tube, NOT AT THE END TIP. Do not attempt to block this side hole as this will cause the final fluid level to be incorrect.**

10. Insert the scale end of the tool into the fork inner tube.
11. Hold the tool adjuster plate level with the upper surface of the fork inner tube and draw fluid into the syringe until fluid flow ceases (empty the syringe if the body becomes full before fluid flow stops).
12. The fluid level in the fork is now set to the height set on the tool scale. Check the tool scale setting and repeat the process if incorrectly set.
13. Extend the inner tube and insert the fork spring.
14. Fit the spring seat and spacer.

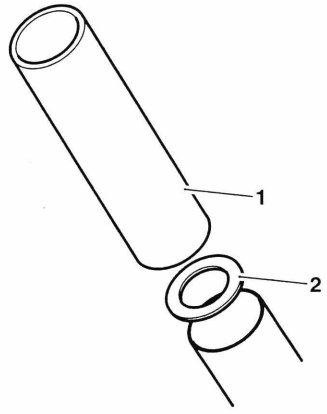

1. Spacer
2. Spring seat

15. Lubricate the O-ring with a smear of fork oil then screw the top cap fully into the inner tube.

Warning

Keep the top cap under pressure until you are sure it is fully engaged with the inner tube threads. To prevent injury, always wear eye, face and hand protection when refitting the top cap.

16. Refit the fork (see page *13-28*) and tighten the top cap to **30 Nm**.

Note:

- **It is much easier to tighten the top cap when the fork is securely clamped in the top yoke.**

Front Fork - Rocket III Touring

Disassembly

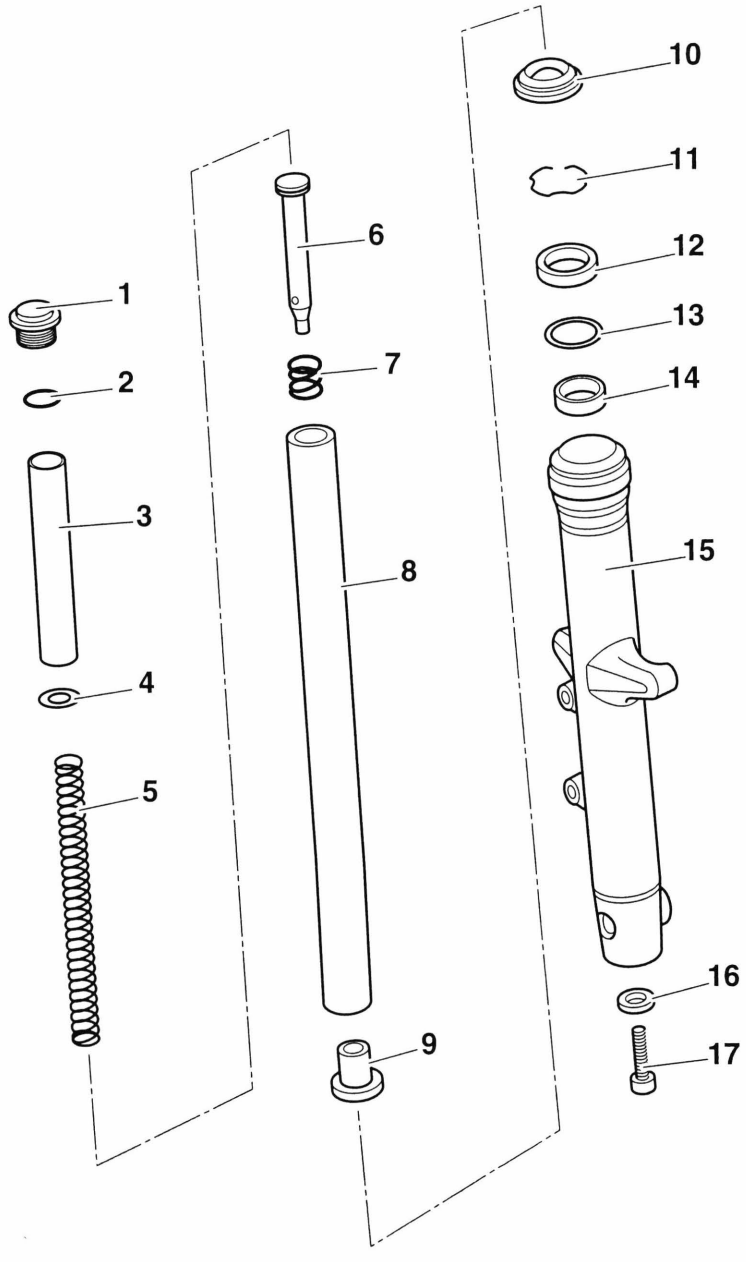

aayb2

Fork Components

1. Top cap
2. O-ring
3. Spacer
4. Spring seat
5. Spring
6. Damper rod
7. Rebound spring
8. Inner tube
9. Damper rod seat
10. Dust seal
11. Circlip
12. Oil seal
13. Washer
14. Bush
15. Outer tube
16. Sealing washer
17. Damper rod bolt

Warning

Before starting work, ensure the motorcycle is stabilised and adequately supported. This will help prevent it from falling and causing injury to the operator or damage to the motorcycle.

1. Remove the fork assembly (see page *13-27*).
2. If not already done, release the torque on the damping cylinder bolt, then lightly re-tighten it to prevent fluid loss.

Caution

When securing the fork in a vice, take great care not to overtighten the vice as this will cause the fork tube to distort beyond repair.

3. Drain the fork oil (see page *13-29*).
4. Remove the damper rod bolt and sealing washer from the base of the outer tube. Discard the sealing washer.

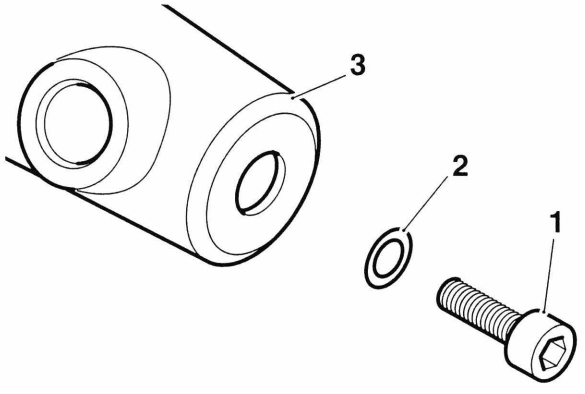

cetp

1. Damper rod bolt
2. Sealing washer
3. Outer tube

5. Invert the fork and tip out the damper rod and rebound spring.
6. Ease the dust seal out of position and slide it off the inner tube.

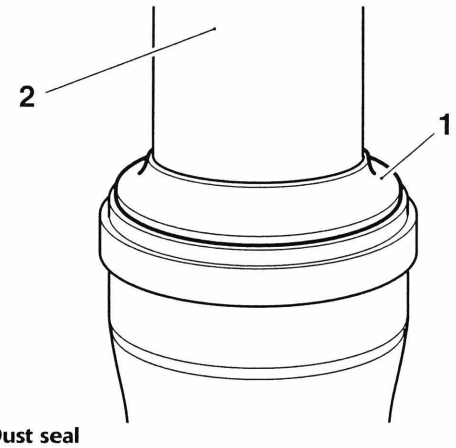

cetn

1. Dust seal
2. Inner tube

7. Carefully ease the circlip out from the top of the outer tube.

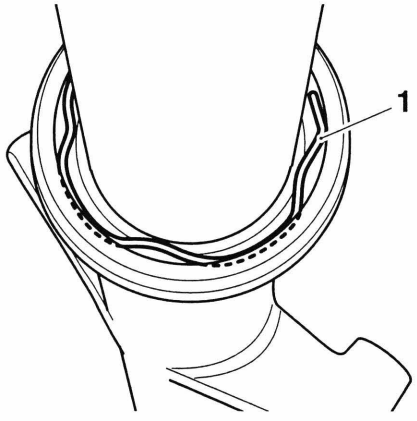

cetn

1. Circlip

Caution

Keep the fork fully compressed whilst removing the circlip. Any accidental damage to the inner tube will then be confined to the area which is normally above the oil seal.

8. Compress the fork then pull the inner tube sharply out of the outer tube. Repeat this procedure until the top bush is forced out of position and the inner and outer tube can be separated.
9. Invert the outer tube and tip out the damper rod seat.
10. Slide the oil seal, washer and upper bush off from the top of the inner tube.

Caution

Do not attempt to remove the lower bush from the inner tube unless it is to be renewed.

Inspection

1. Thoroughly clean and examine all components for damage, wear, scoring, corrosion etc., paying particular attention to the bushes and damper rod piston ring. Renew as necessary.
2. Always renew the oil seal, dust seal and the damper rod bolt sealing washer every time the fork is dismantled.

Assembly

Warning

The front forks comprise many precision machined parts. Total cleanliness must be observed at all times and, assembly must take place in a dirt/dust-free environment.

Dirt ingress may cause damage to the fork parts, leading to incorrect operation, instability, loss of control or an accident.

Note:

- **During assembly of the fork, tool 3880080-T0301 will be used extensively. In the text, reference to a plain end and a chamfered end will be made. This describes the two ends of the tool as shown in the diagram below.**

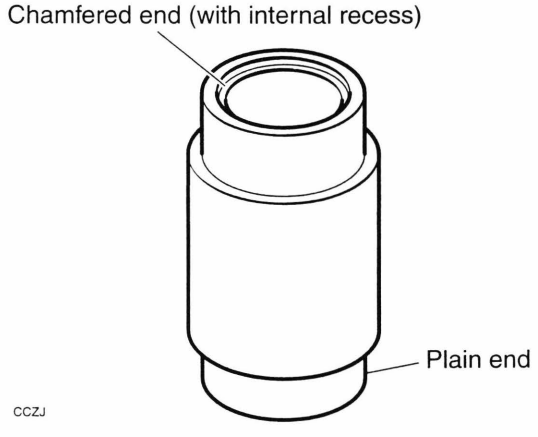

1. Lubricate the damper rod piston ring and the upper and lower bushes with clean fork oil.
2. Fit the rebound spring to the damper rod then insert the assembly into the inner tube.

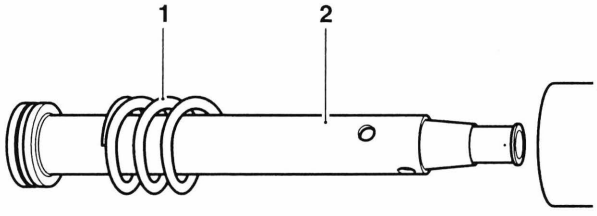

1. Rebound spring
2. Damper rod

3. Fit the seat securely to the end of the damper rod then insert the inner tube assembly into the outer tube.
4. Fit a new sealing washer to the damper rod bolt then apply locking compound (ThreeBond 1342) to the bolt threads.
5. Ensure the damper rod and seat are correctly located in the outer tube then fit the damper rod.

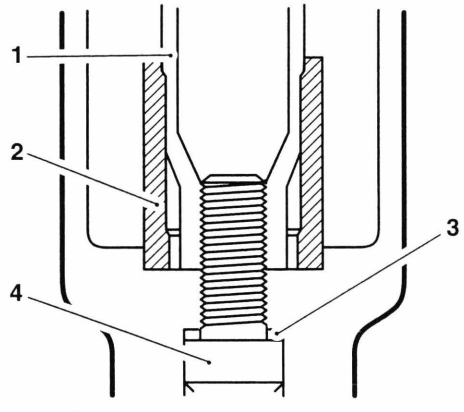

1. Damper rod
2. Seat
3. Sealing washer
4. Bolt

6. Slide the top bush along the inner tube and locate it in the outer tube. Drift the bush into position using the plain end of tool 3880080–T0301.

⚠ Caution

Keep the fork fully compressed whilst installing the bush, oil seal and circlip. Any accidental damage to the inner tube will then be confined to the area which is normally above the oil seal.

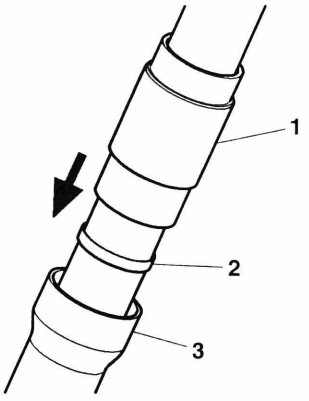

1. Tool 3880080–T0301
2. Top bush
3. Outer tube

7. Slide the washer along the inner tube and locate it in the outer tube.
8. Lubricate the lip of the new oil seal with fork oil. Ensure the seal is the correct way around then ease it onto the inner tube. Drift the seal into position in the outer tube using the plain end of tool 3880080-T0301.
9. Secure the oil seal in position with the circlip, ensuring it is correctly located in its groove.
10. Fit the new dust seal onto the inner tube and drift it into position in the outer tube using the chamfered end of tool 3880080–T0301.

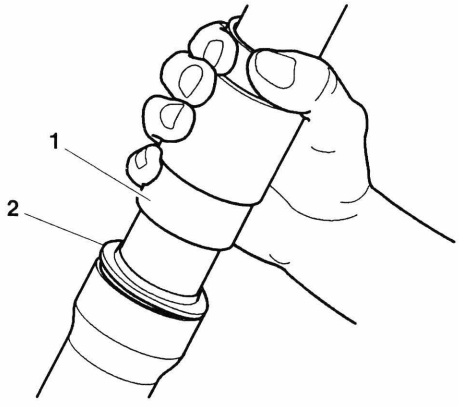

1. Tool 3880080–T0301
2. Dust seal

11. Refill the fork with new oil (see page *13-30*).
12. Extend the inner tube and insert the fork spring.
13. Fit the spring seat and spacer.

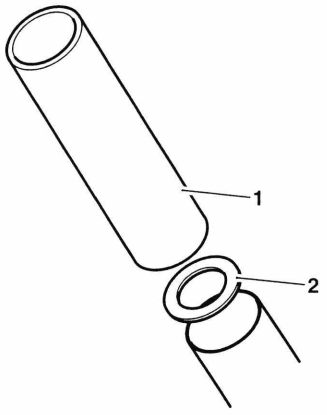

1. Spacer
2. Spring seat

14. Lubricate the O-ring with a smear of fork oil then screw the top cap fully into the inner tube.

⚠ Warning

Keep the top cap under pressure until you are sure it is fully engaged with the inner tube threads. To prevent injury, always wear eye, face and hand protection when refitting the top cap.

15. Tighten the damper rod bolt to **30 Nm**.

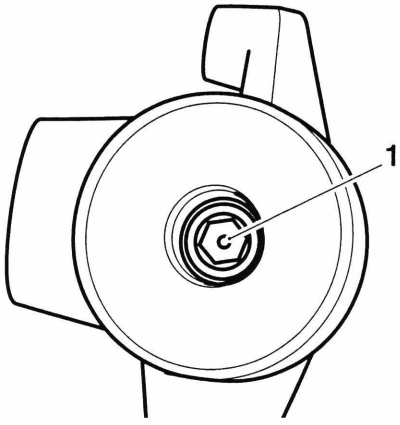

1. Damper rod bolt

16. Refit the fork (see page *13-28*) and tighten the top cap to **30 Nm**.

Note:

- **It is much easier to tighten the top cap when the fork is securely clamped in the bottom yoke.**

Steering Head Bearing Check and Adjustment - Rocket III Touring

Warning

Before starting work, ensure the motorcycle is stabilised and adequately supported. This will help prevent it from falling and causing injury to the operator or damage to the motorcycle.

Check

1. Raise and support the motorcycle so that the front wheel is clear of the ground.
2. Move the handlebars from lock-to-lock whilst checking for signs of tight spots or notchiness (bearings over-tightened).
3. Hold the lower end of the front forks and try to move them forward and backward to check for signs of free play in the bearings (bearings insufficiently tightened or worn).

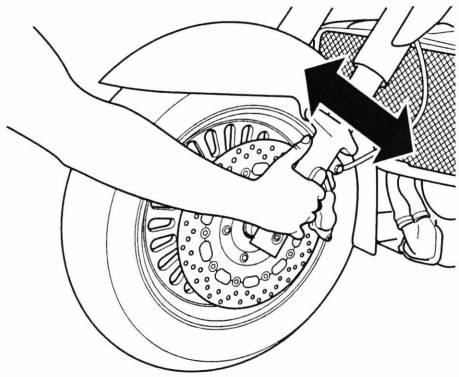

ceok

Checking for Free Play in Steering Head Bearings

4. Adjust as described below then lower the motorcycle to the ground.

Adjustment

1. Remove the seat (see page *17-19*).
2. Disconnect the battery, negative (black) lead first.
3. Remove the windscreen (see page *17-33*).
4. Release the three fixings securing the instrument assembly to the fuel tank.

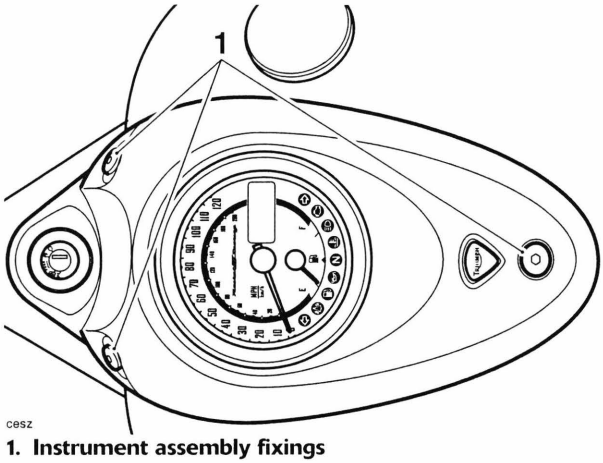

cesz

1. Instrument assembly fixings

5. Protect the top of the fuel tank from accidental damage and position the instrument assembly clear of the top yoke.
6. Slacken the top yoke clamp bolt.

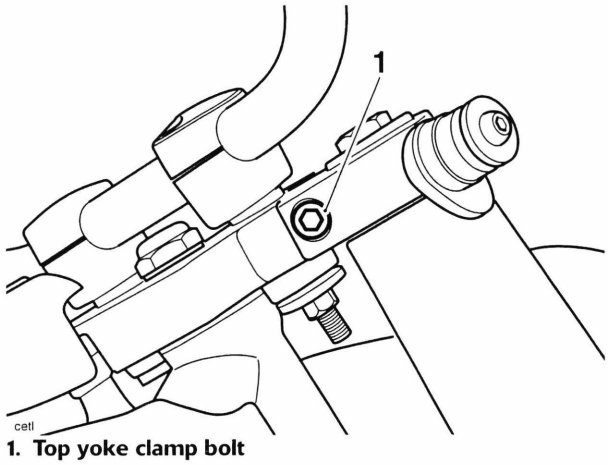

cetl

1. Top yoke clamp bolt

Note:

- **Make a note of the cable routings behind the cable guide.**

7. Release the two screws and remove the cable guide.

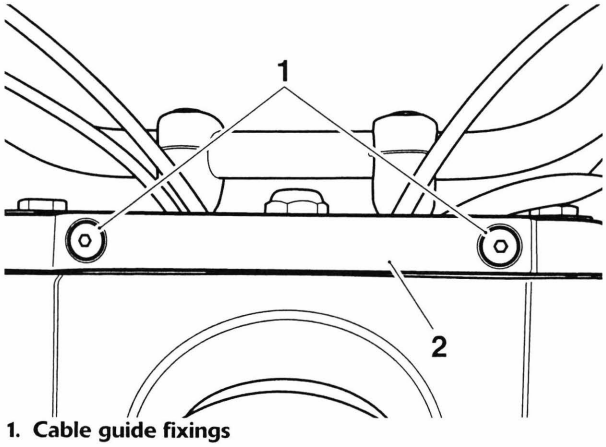

1. Cable guide fixings
2. Cable guide

8. Remove the handlebar (see page *17-37*).
9. Slacken and remove the top nut and washer. Lift and remove the top yoke.

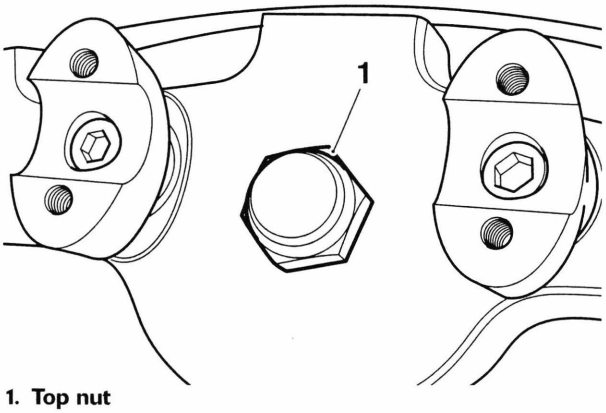

1. Top nut

10. Slacken the locknut and adjuster nut.

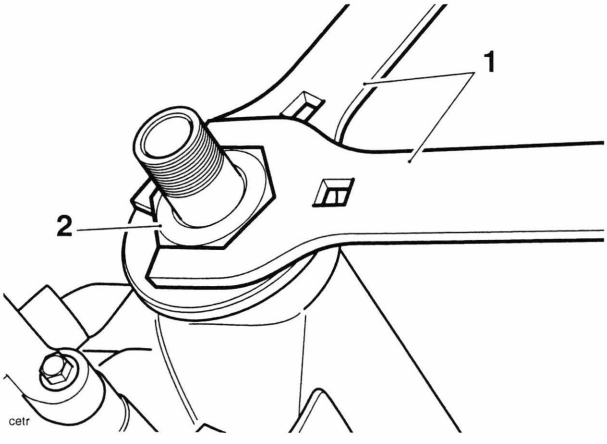

1. Tools 3880140-T0301
2. Locknut

11. Adjust the bearing free play as follows:
    a) Tighten the adjuster nut to **40 Nm**.
    b) Slacken the adjuster nut fully.
    c) Re-tighten the adjuster nut to **40 Nm**.
    d) Loosen the adjuster nut by **90°**. Note that there will now be free play present.
12. With the bearing free play correctly set, hold the adjuster nut stationary then tighten the locknut to **40 Nm** using tools 3880140–T0301.

Note:

- **Ensure the adjuster nut does not move as the locknut is tightened.**

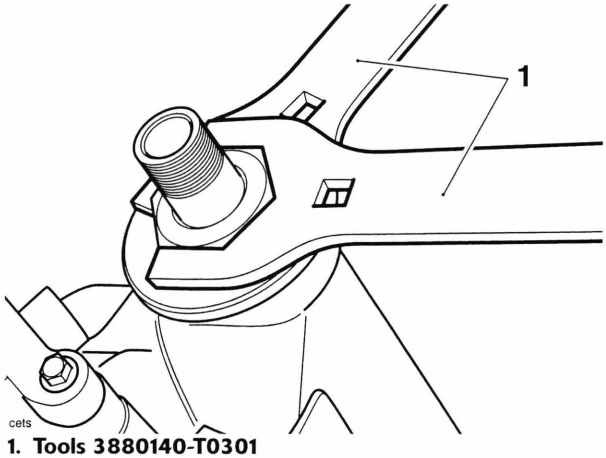

1. Tools 3880140-T0301

13. Align the two locating holes in the forks infill shroud to the two locating posts on the top yoke.

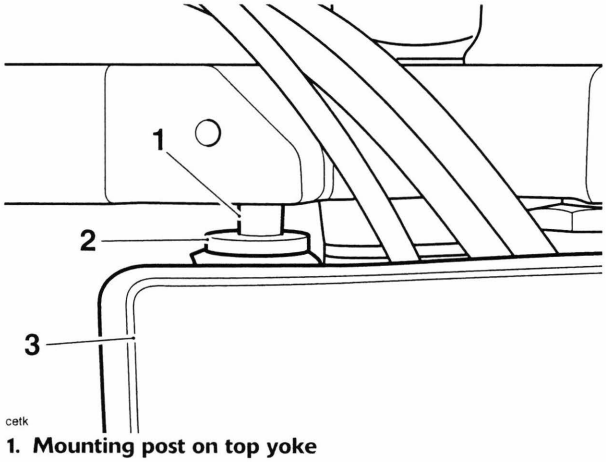

1. Mounting post on top yoke
2. Forks infill shroud locating hole
3. Forks infill shroud

14. Seat the top yoke in to position.

15. Refit the washer and top nut, tightening it to **65 Nm**.

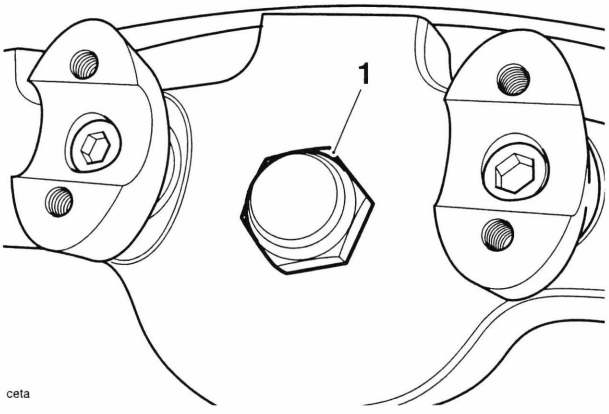

1. Top nut

16. Tighten the top yoke clamp bolt to **20 Nm**.
17. Refit the instrument assembly and tighten the fixings to **7 Nm**.
18. Install the handlebar (see page *17-38*).
19. Refit the cable guide and tighten the fixings to **7 Nm**.
20. Check that the free play has been eliminated and that the steering can be turned freely from lock to lock without any sign of tightness. Re-adjust if necessary.

⚠ Warning

Operation of the motorcycle with incorrectly adjusted steering head bearings, either too loose or too tight, may cause a dangerous riding condition leading to loss of motorcycle control and an accident.

21. Refit the windscreen (see page *17-33*).
22. Reconnect the battery, positive (red) lead first.
23. Refit the seat (see page *17-19*).

Bottom Yoke and Headstock Bearings - Rocket III Touring

Yoke Removal

⚠ Warning

Before starting work, ensure the motorcycle is stabilised and adequately supported. This will help prevent it from falling and causing injury to the operator or damage to the motorcycle.

1. Remove both forks (see page *13-27*).
2. Release the two screws and detach the headlight from the headlight bowl.

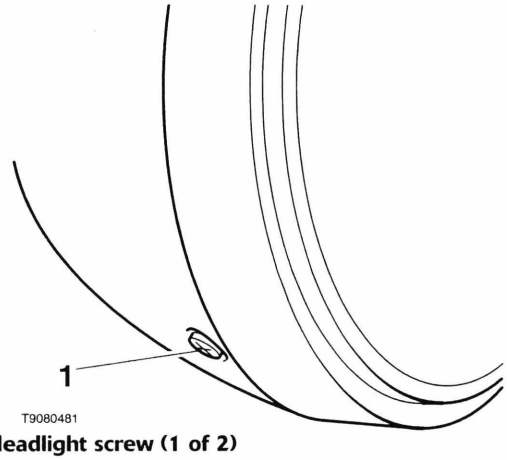

1. Headlight screw (1 of 2)

3. Disconnect the multi-pin electrical connector from the headlight bulb, detach the position light and remove the headlight.
4. Release the bolt securing the horn and bracket assembly to the bottom yoke, disconnect the horn electrical connectors and remove the horn.

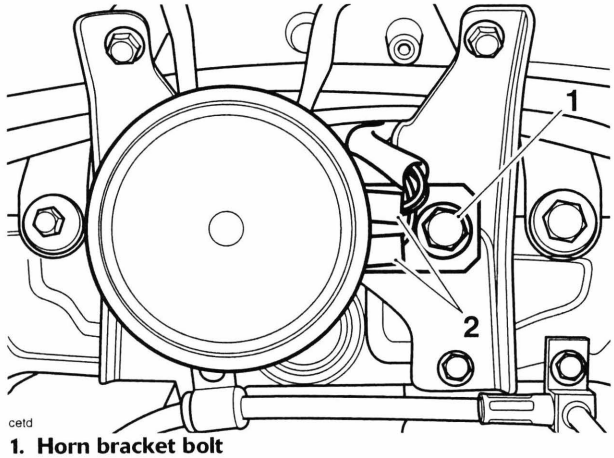

1. Horn bracket bolt
2. Horn electrical connectors

Note:

- **Make a note of the wiring harness routing inside the headlight bowl.**

5. Release the bolt and remove the headlight bowl while feeding the harness out of the headlight bowl.

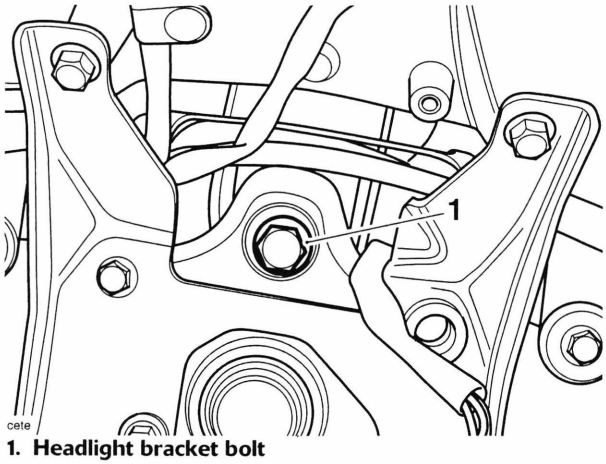

cete

1. Headlight bracket bolt

6. Release the two bolts and remove the forks infill shroud.

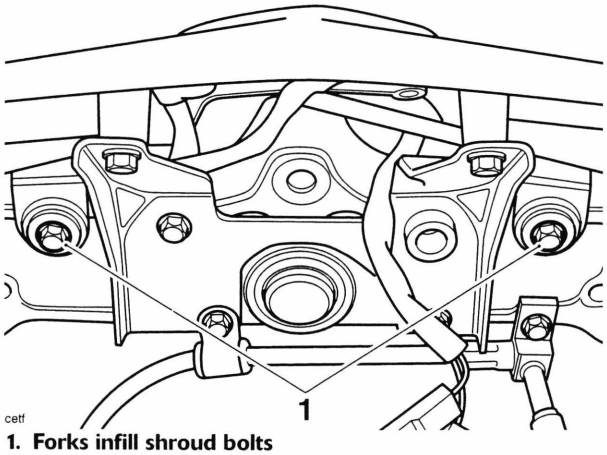

cetf

1. Forks infill shroud bolts

7. Release the three bolts and detach the brake hose clamp and the front indicators bracket from the bottom yoke. Protect the motorcycle and position the front indicators and bracket clear of the bottom yoke.

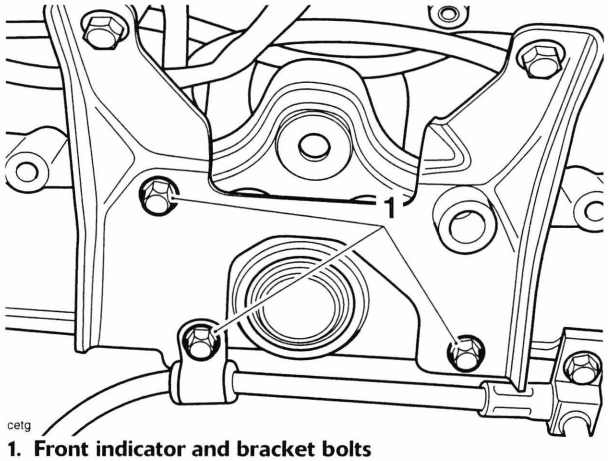

cetg

1. Front indicator and bracket bolts

8. Release the brake hose bracket from the bottom yoke.

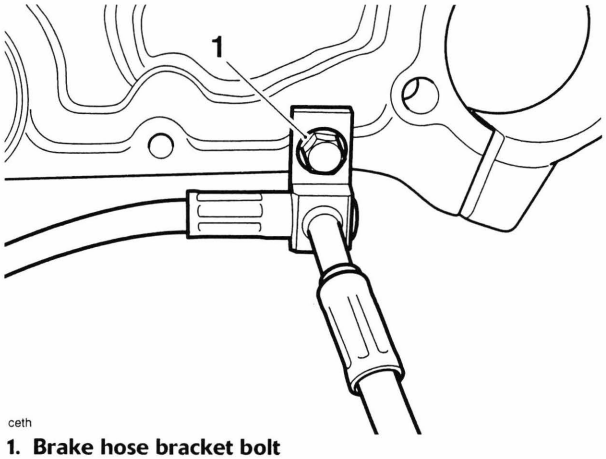

ceth

1. Brake hose bracket bolt

9. Remove the locknut, adjuster nut and bearing cover.

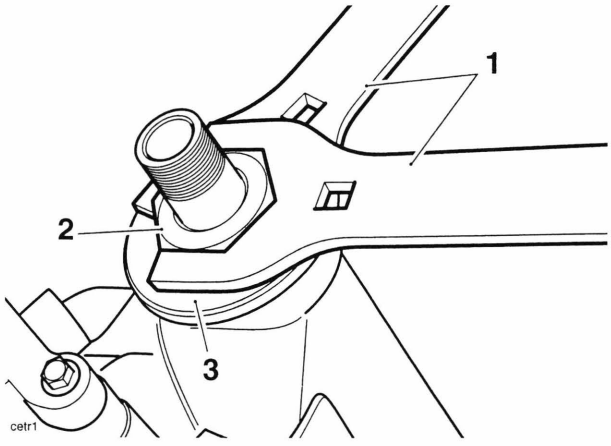

1. Tools 3880140-T0301
2. Locknut
3. Bearing cover

10. Detach the bottom yoke from below the frame headstock.

Bearing removal

1. Using a suitable drift, evenly and progressively drive the bearing outer races from the frame headstock.
2. Remove the bearing from the bottom yoke using a press or puller.

⚠ Caution

Protect the threads of the bottom yoke when using a press or puller as damaged threads may mean replacing the yoke completely.

Installation

1. Press a new bearing onto the steering stem of the bottom yoke.

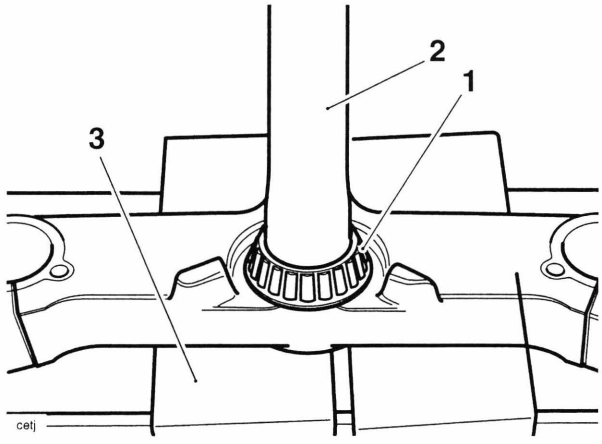

1. Bearing
2. Press
3. Press bed

2. Evenly and progressively drive new bearing outer races into the frame headstock.

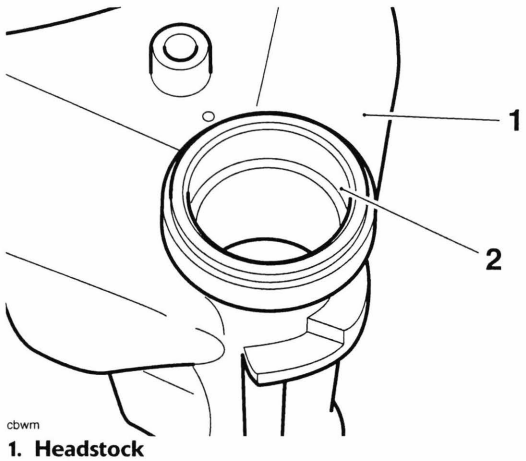

1. Headstock
2. Bearing outer race

3. Lubricate the headstock bearings using multi-purpose grease.
4. Insert the lower yoke to the frame headstock, fit the upper bearing and retain with the bearing cover, adjuster nut and locknut.
5. Adjust the bearing free play as follows:
   a) Tighten the adjuster nut to **40 Nm**.
   b) Slacken the adjuster nut fully.
   c) Re-tighten the adjuster nut to **6 Nm**.
   d) Loosen the adjuster nut by **90°**. Note that there will now be free play present.
   e) Hold the adjuster nut in that position while tightening the locknut to **40 Nm**.

Note:

- **Ensure the adjuster nut does not move as the locknut is tightened.**

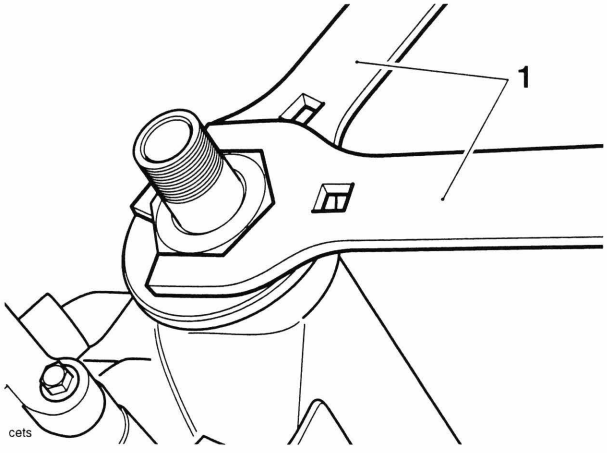

1. Tools 3880140-T0301

6. Refit the brake hose bracket to the bottom yoke. Tighten the bolt to **9 Nm**.

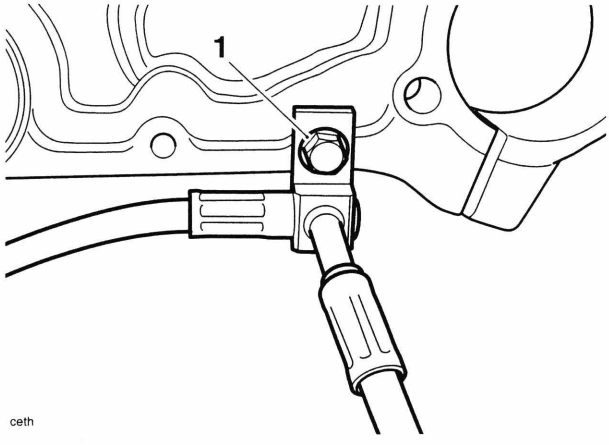

1. Brake hose bolt

7. Refit the front indicators bracket and brake hose clamp. Tighten the bolts to **9 Nm**.

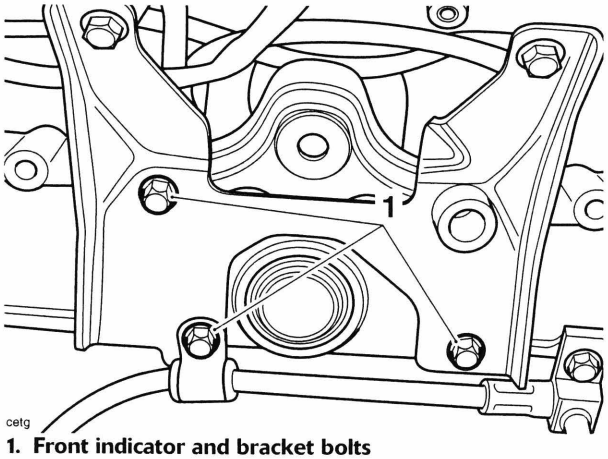

1. Front indicator and bracket bolts

8. Refit the forks infill shroud. Tighten the bolts to **9 Nm**.

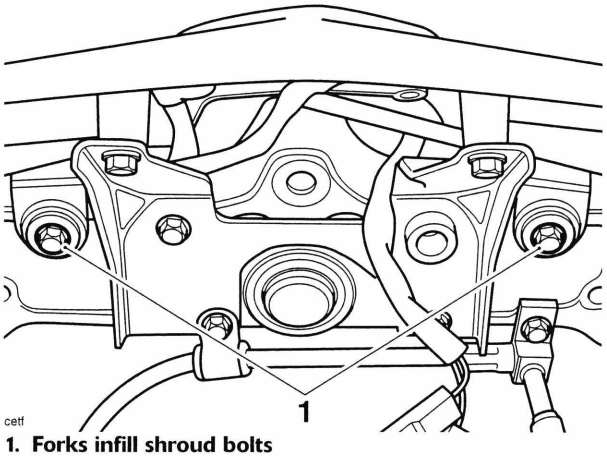

1. Forks infill shroud bolts

9. Refit headlight bowl and bracket assembly. Tighten the bolt to **35 Nm**.

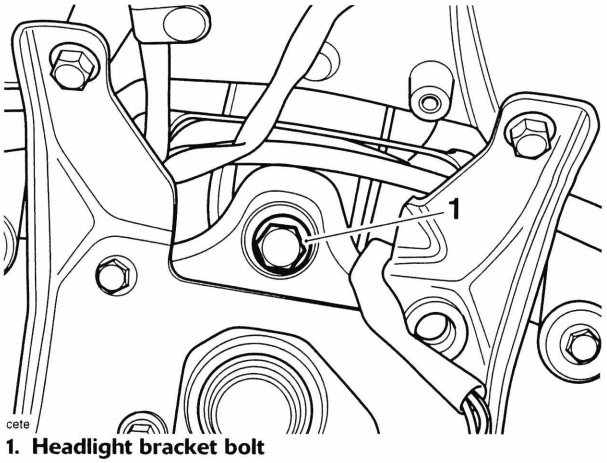

1. Headlight bracket bolt

10. Refit the wiring harness in to the headlight bowl as noted from the removal.

11. Refit the horn and bracket assembly and connect the horn electrical connectors. Tighten the bolt to **18 Nm**.

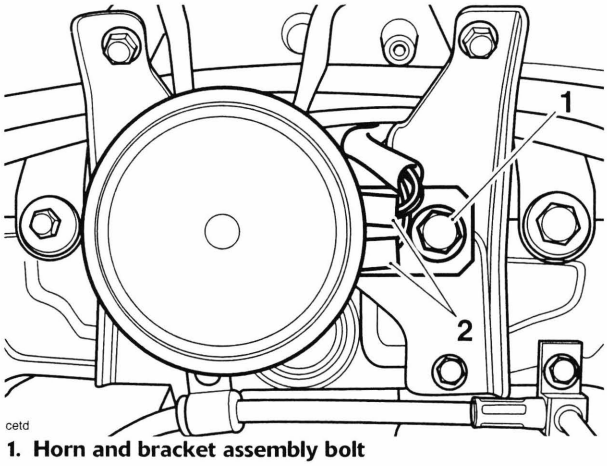

cetd

1. Horn and bracket assembly bolt
2. Horn electrical connectors

12. Refit the headlight. Tighten the screws to **12 Nm**.

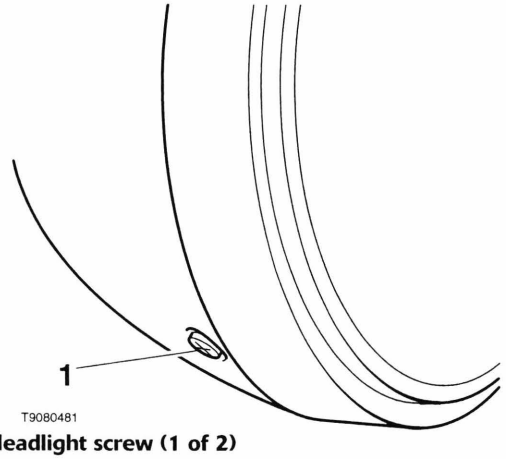

T9080481

1. Headlight screw (1 of 2)

Note:

- **For the alignment of the top yoke, do not tighten the top nut.**

13. Seat the top yoke assembly in position then refit the washer and top nut. Do not fully tighten the top nut.

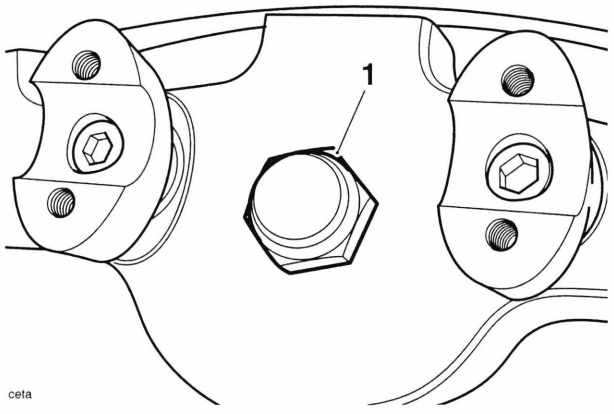

ceta

1. Top nut

14. Install the forks (see page *13-28*).
15. Check that the free play has been eliminated and that the steering can be turned freely from lock to lock without any sign of tightness. Re-adjust if necessary.

Warning

Operation of the motorcycle with incorrectly adjusted steering head bearings, either too loose or too tight, may cause a dangerous riding condition leading to loss of motorcycle control and an accident.

14 Rear Suspension

Table of Contents

Exploded View - Swinging Arm 14.2

Exploded View - Rear Suspension Units 14.3

Rear Suspension Units 14.4

- Adjustment 14.4
- Suggested Suspension Settings 14.4
- Removal 14.5
- Inspection 14.5
- Installation 14.6

Swinging Arm and Drive Shaft 14.6

- Removal 14.6
- Inspection 14.8
- Installation 14.8

Swinging Arm Bearings 14.10

- Removal 14.10
- Installation 14.10

Exploded View - Swinging Arm

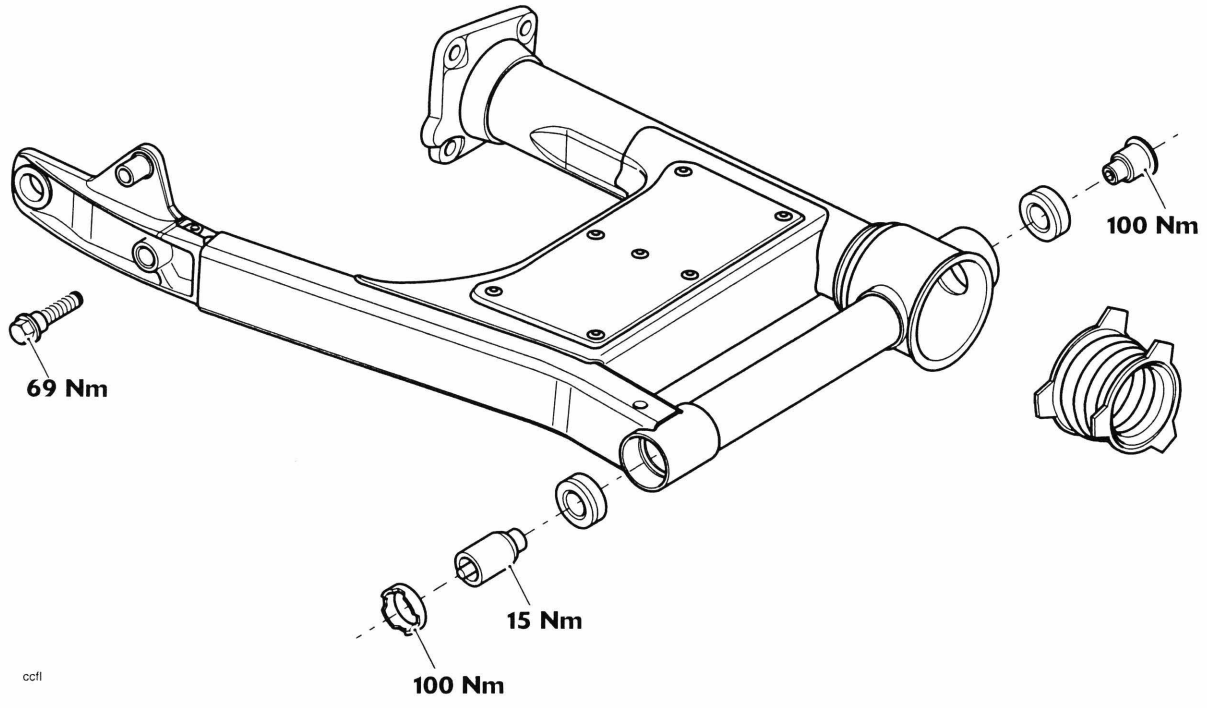

Exploded View - Rear Suspension Units

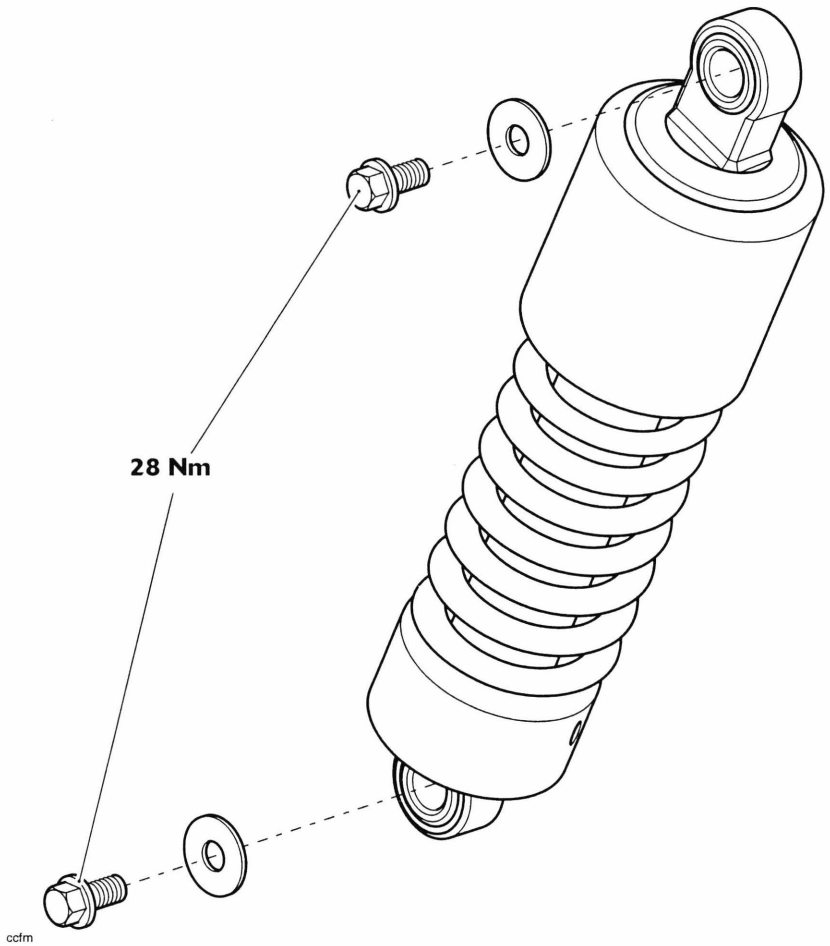

Rear Suspension Units

Adjustment

The rear suspension is adjustable for pre-load only.

To change the rear suspension spring pre-load setting, insert the adjustment tool supplied in the tool kit into the hole provided in the adjuster ring.

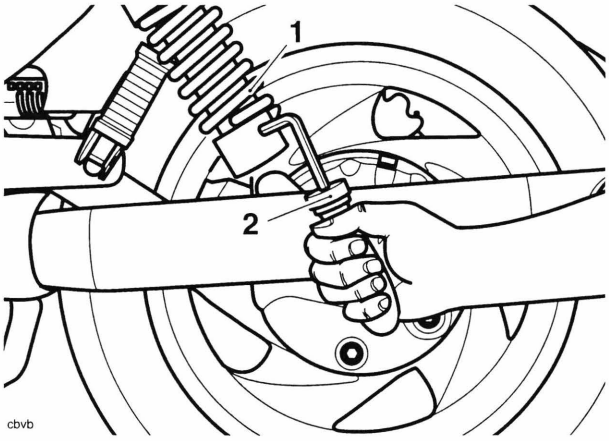

1. Rear Suspension Unit
2. Tool

Turn the adjuster ring clockwise to increase spring pre-load, and anti clockwise to decrease spring pre-load. When delivered from the factory, the pre-load adjuster will be set at position 1 for Rocket III and Classic, position 2 for Rocket III Roadster and Touring.

Warning

Ensure that the adjusters are set to the same setting on both rear suspension units. Settings that vary from left to right may affect handling and stability resulting in loss of motorcycle control, and an accident.

Suggested Suspension Settings

Adjuster settings are counted from one with position one being with the adjuster turned fully anti clockwise. There are five positions in total. Position one gives the minimum amount of spring pre-load.

Riding Condition	Suspension Preload Setting	Suspension Preload Setting
	Rocket III and Classic	Rocket III Touring
Rider only	Position 1	Position 2
Rider and passenger	Position 2	Position 4
Rider, passenger and luggage	Position 5	Position 5

Note:

- **The details given in the table are to be used as a guide only where the rider and passenger each weigh 90 kg or less. Setting requirements should be increased for heavier riders and passengers and according to personal preferences.**

Removal

Warning

Before starting work, ensure the motorcycle is stabilised and adequately supported. This will help prevent it from falling and causing injury to the operator or damage to the motorcycle.

Rocket III Touring

Note:

- **For Rocket III, Classic and Roadster go to step 5.**

1. Open the pannier lid.
2. Release the pannier quick release fixings and remove the pannier.

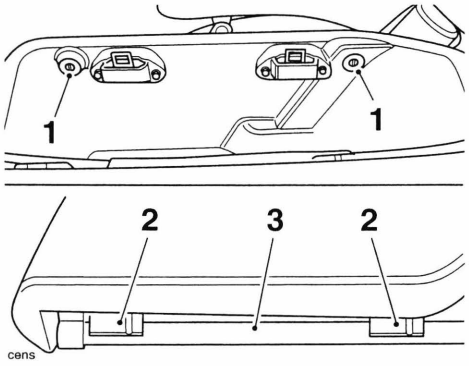

1. Quick release fixings
2. Pannier lower mountings
3. Pannier rail

3. Remove the seat (see page *17-19*).
4. Remove the upper and lower mounting bolts and remove the pannier rail dresser bar.

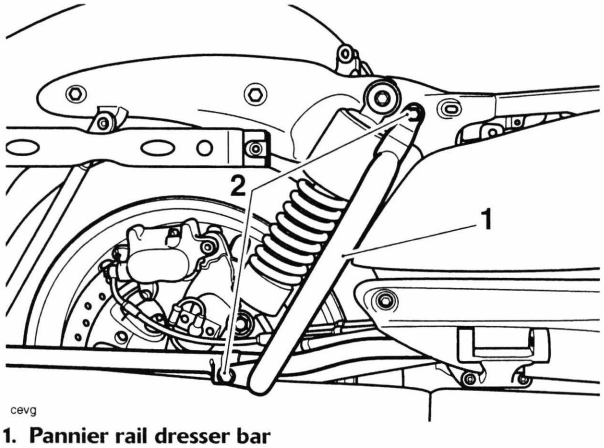

1. Pannier rail dresser bar
2. Mounting bolts

All Models

5. Raise and support the motorcycle so that the rear wheel is clear of the ground.

Note:

- **If both suspension units are to be removed, place a block beneath the rear wheel to prevent it dropping when the second unit is removed.**

6. Slacken and remove the upper and lower mounting bolts and washers then remove the suspension unit from its mounting spigots.

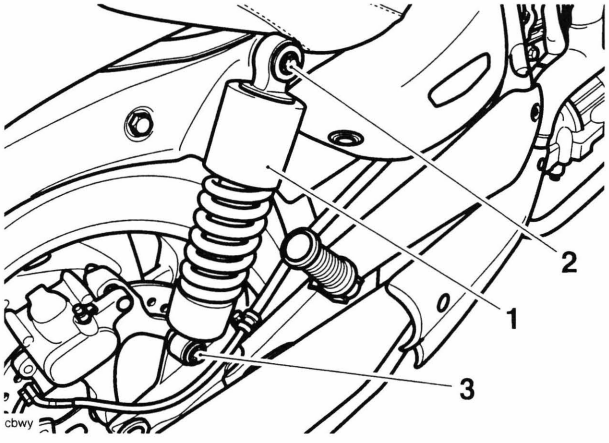

1. Rear suspension unit
2. Upper mounting bolts
3. Lower mounting bolts

7. Repeat operations 1 to 6 for the other rear suspension unit (if required).
8. Discard all mounting bolts removed.

Inspection

1. Remove all traces of dirt and inspect for damage/wear to the mountings and springs.
2. Inspect the unit closely for fluid leaks from all parts of the unit and for cracks and damage to the springs. If there is any damage, or any leaks are evident, both rear suspension units must be renewed as a matched pair.
3. Check the mounting rubbers for cracks and signs of elongation. Replace as necessary.

Warning

Always renew both rear suspension units as a pair, even if only one appears to be faulty. If only one suspension unit is replaced, the handling of the motorcycle could be adversely affected. This could result in an unsafe riding condition leading to a loss of motorcycle control and an accident.

Installation

1. Locate the suspension units to the mounting spigots, articulating the swinging arm until the distance between the upper and lower spigots allows the units to fit.
2. Fit the original washers to new mounting bolts. Install the bolts then tighten them to **28 Nm**.

Note:

- **The large washer is fitted to the top mounting, the smaller washer to the lower.**

3. Repeat operations 1 and 2 for the other rear suspension unit (if removed).
4. Remove the wheel support (if fitted), lower the motorcycle to the ground and park it on the side stand.

Rocket III Touring

5. Refit the pannier rail dresser bar and tighten the bolts to **22 Nm**.
6. Align the pannier lower mountings to the pannier rail.
7. Align the two upper quick release fixings to the pannier rail.
8. Turn the quick release fixings one quarter turn clockwise to the locked position.

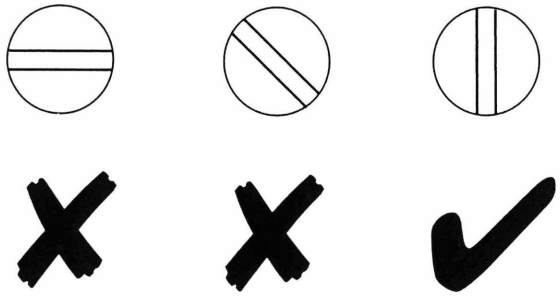

Pannier Quick Release Fixings Locked

Warning

Always ensure the panniers are secure and the quick release fixings are locked. A loose or detached pannier could cause loss of motorcycle control and an accident.

Swinging Arm and Drive Shaft

Removal

Warning

Before starting work, ensure the motorcycle is stabilised and adequately supported. This will help prevent it from falling and causing injury to the operator or damage to the motorcycle.

Note:

- **For Rocket III and Classic, the swinging arm may be removed with the exhaust system in place.**
- **For Rocket III Roadster and Touring, the exhaust silencers will need to be removed when the rear wheel is removed.**

1. Support the motorcycle so that the rear wheel is clear of the ground, with no weight on the swinging arm and suspension units.
2. Remove the rear wheel (see page *16.10* for Rocket III, Classic and Roadster, see page *16.15* for Rocket III Touring).
3. Remove the bevel box (see page *6.5*).
4. Remove the rear suspension units (see page *14.5*).
5. Detach the brake pipe clips from the right hand side of the swinging arm.

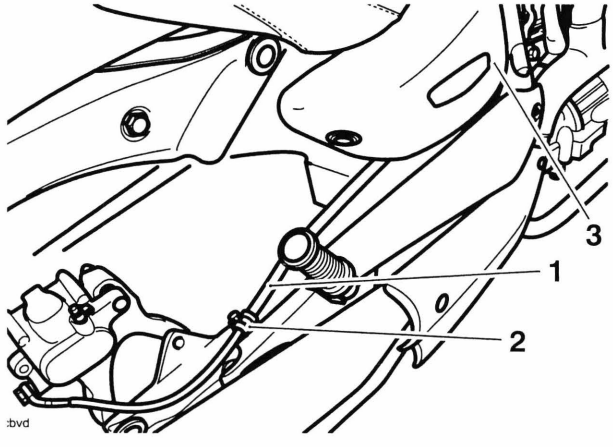

1. Brake pipe
2. Clips (rear of two shown)
3. Forward clip location on swinging arm

6. **For Rocket III, Classic and Roadster:** Remove the passenger foot peg, release the outrigger cover fixings and remove the outrigger cover, on both sides.

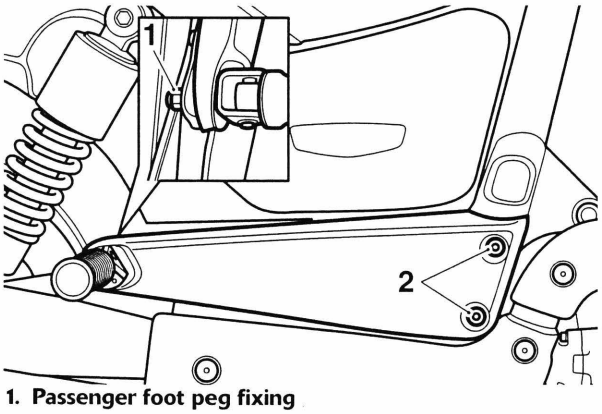

1. Passenger foot peg fixing
2. Outrigger cover fixings

7. **For Rocket III Touring only:** Release the outrigger cover fixings and remove the outrigger cover, on both sides.

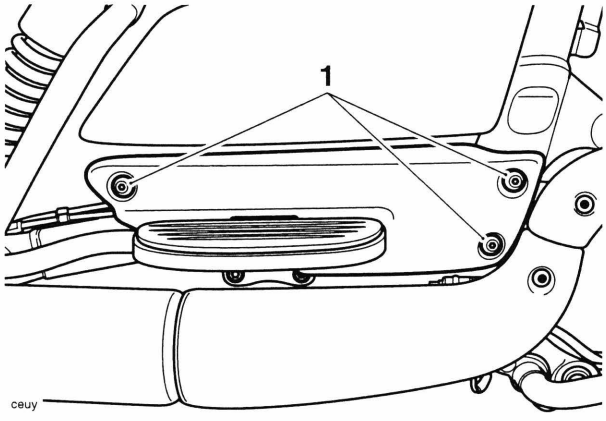

1. Outrigger cover fixings

8. **All Models:** Using tool T3880062, release the locking ring on the right hand swinging arm pivot.

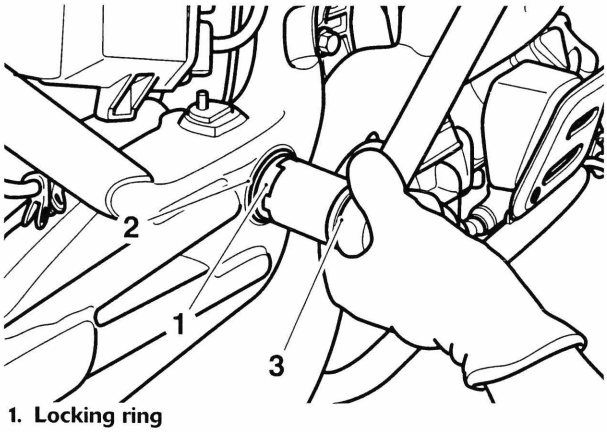

1. Locking ring
2. Swinging arm pivot
3. Tool T3880062

9. Support the arm before removing both swinging arm pivots completely.

Note:

- **The left hand pivot will be very tight.**

10. Ease the swinging arm rearwards while detaching the drive shaft gaiter from the arm, leaving it attached to the transmission.
11. Manoeuvre the swinging arm from the frame, sliding it over the drive shaft (which runs inside it). Take care to not damage or detach the air box drain hoses during removal.

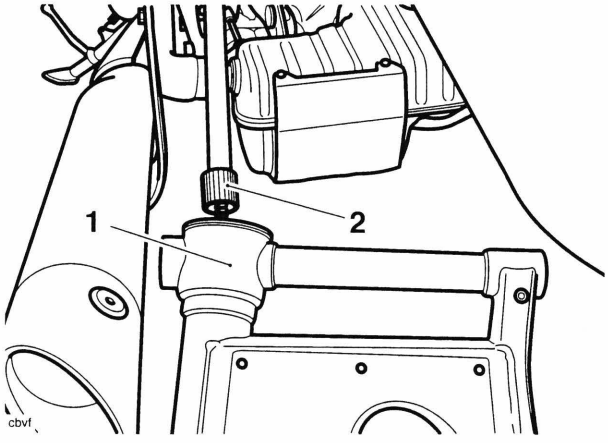

1. Swinging arm
2. Drive shaft

12. If necessary, detach the drive shaft from the gearbox output shaft by pulling it gently towards the rear of the motorcycle.

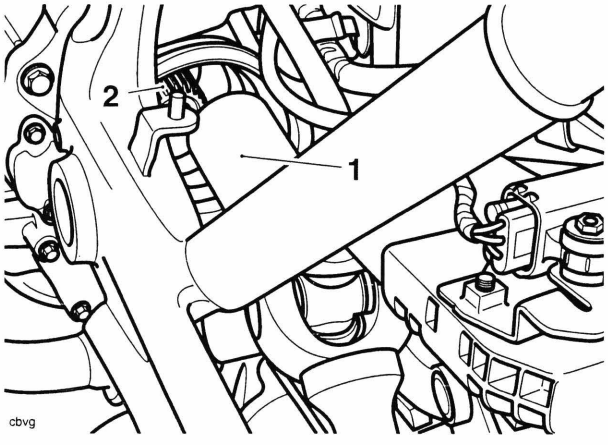

1. Drive shaft
2. Gearbox output shaft

Inspection

1. Inspect the swinging arm bearings and bearing outer cups for damage, cracks and signs of the bearing rollers indenting the outer cup. Renew the bearings as described on page *14.5* if any damage is present in either bearing.
2. Inspect the swinging arm pivots for damage and deformation. Renew as necessary.
3. Inspect the drive shaft gaiter for splits and other damage. Replace as necessary.

Installation

Note:

- **The drive shaft gaiter is attached to the swinging arm with super glue.**
- **Do not attempt to fit the swinging arm with the drive shaft sleeve in place. Fit the sleeve after first fitting the swinging arm to the frame.**

1. Grease the drive shaft splines with molybdenum disulphide grease.
2. Locate and engage the drive shaft to the gearbox output shaft.
3. Thoroughly lubricate the swinging arm bearings with general purpose grease before positioning them to the swinging arm.

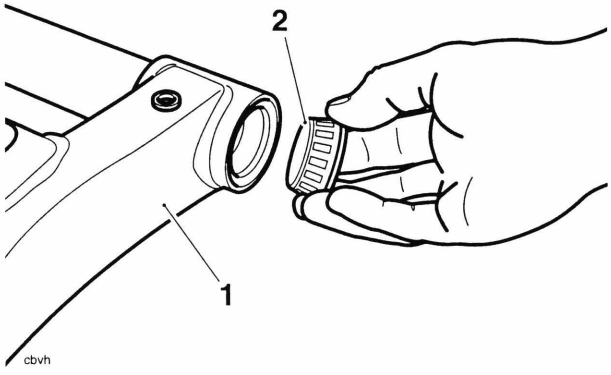

1. Swinging arm
2. Bearing

4. Position the swinging arm to the drive shaft and manoeuvre the arm along the drive shaft.

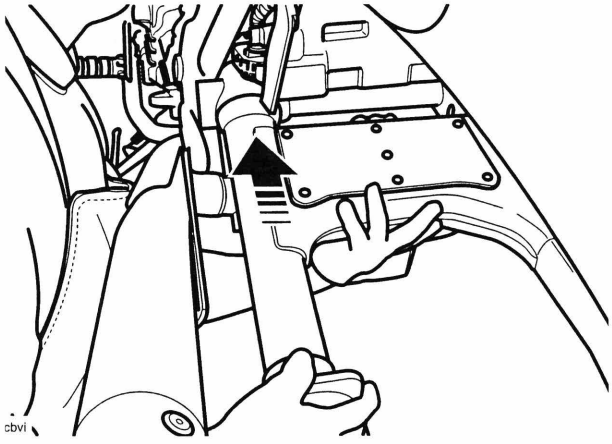

Fitting the swinging arm

5. Engage the threads of the swinging arm pivots to the frame.

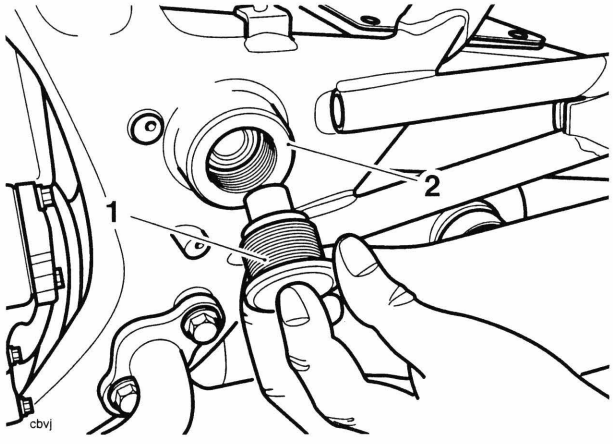

1. Pivots
2. Frame

6. Position the swinging arm bearings to the pivots.
7. Engage the pivots to the swinging arm bearings.
8. Tighten the left hand pivot to **100 Nm**.

9. Tighten the right hand pivot to **15 Nm**.
10. Tighten the right hand locking ring to **100 Nm** using tool T3880062.

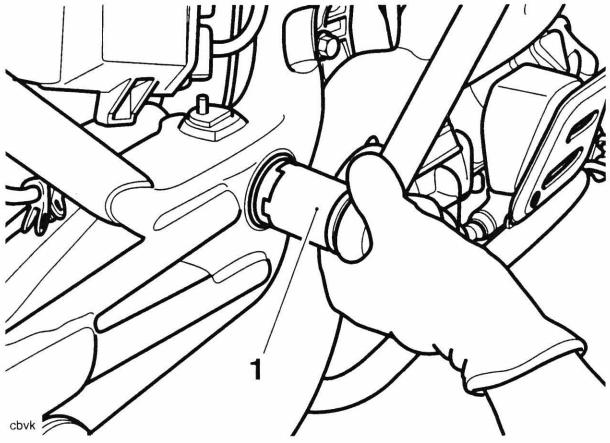

1. Tool T3880062

11. Apply a smear of general purpose grease to the drive shaft sleeve, inside and out.
12. Refit the drive shaft gaiter to the swinging arm and crankcase. Ensure it is engaged throughout its entire circumference both ends.
13. Refit the drive shaft sleeve.

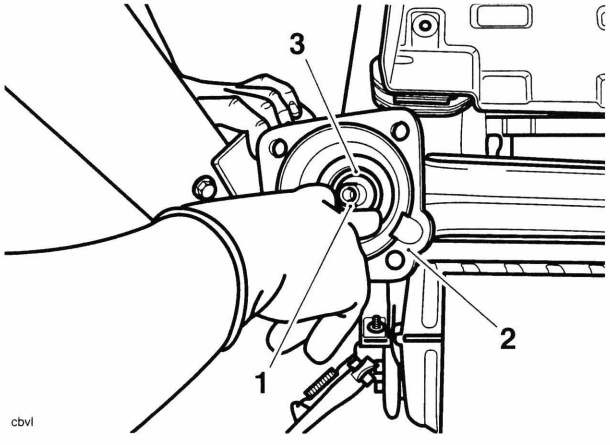

1. Drive shaft
2. Swinging arm
3. Sleeve

14. Align the two brake pipe clips to the right hand side of the swinging arm. Tighten the clip fixings to **7 Nm**.

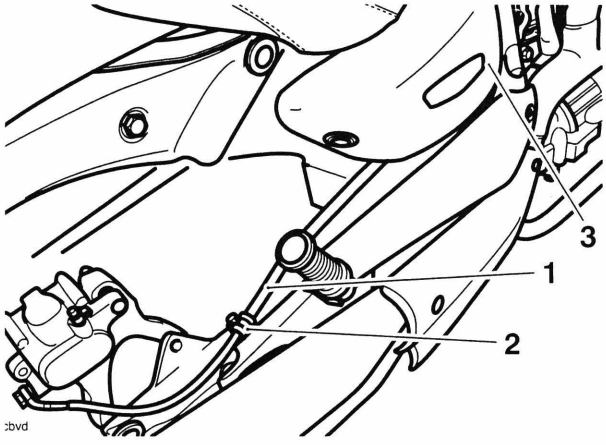

1. Brake pipe
2. Clips
3. Forward clip location on swinging arm

15. Refit the rear suspension units (see page *14.6*).
16. Refit the bevel box (see page *6.5*).
17. Refit the rear wheel (see page *16.11* for Rocket III, Classic and Roadster, see page *16-17* for Rocket III Touring).
18. **Rocket III, Classic and Roadster only:** Position the outrigger covers. Fit the outrigger front fixings and tighten to **3 Nm**.
    Fit passenger foot peg and tighten the nut to **27 Nm**.
19. **Rocket III Touring only:** Position the outrigger covers. Fit the outrigger fixings and tighten to **3 Nm**.
20. **All Models:** Lower the motorcycle to the ground and park it on the side stand.
21. Pump the rear brake to position the rear brake pads.

Swinging Arm Bearings

Removal

Warning

Before starting work, ensure the motorcycle is stabilised and adequately supported. This will help prevent it from falling and causing injury to the operator or damage to the motorcycle.

1. Remove the swinging arm (see page *14.6*).

Note:

- **It is necessary to remove the left hand bearing first.**

2. Working from the opposite side of the arm to the bearing being removed, drift out the bearing and plug together.

Note:

- **For access to the bearing cup during removal, it is recommended that the plug be deliberately deformed and removed first in order to see the rear face of the bearing cup.**

3. Repeat for the second bearing cup.

Caution

Never use excessive force to drift the outer cup from the swinging arm or allow the cup to tip excessively. Either condition will damage the swinging arm.

4. To remove the right hand bearing, drift out the plug and bearing outer cup working from the left hand side of the swinging arm.

Installation

Note:

- **Replacement bearings are supplied with the plug attached to the outer cup by means of adhesive. Do not separate these components, as it is not necessary to do so for installation. The plug is not an interference fit in the swinging arm.**

1. Thoroughly clean all debris and dirt from the two bearing locations in the swinging arm.
2. Press the new bearing outer cups and plugs into each side of the swinging arm using tool T3880064, until both are pressed fully up to their locating shoulders inside the arm.

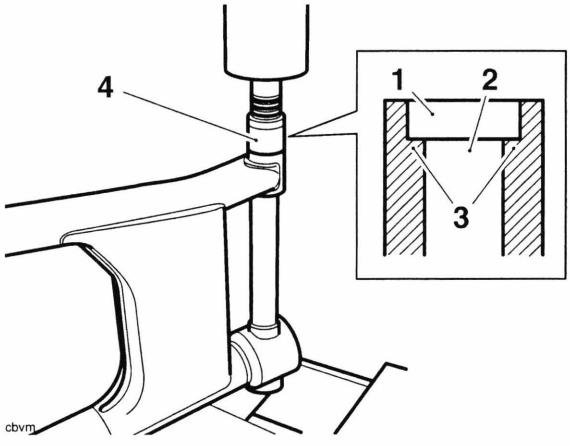

1. Bearing outer cup
2. Plug
3. Shoulder (arm shown in section)
4. Tool T3880064

3. Apply general purpose grease to both bearings before refitting the swinging arm (see page *14.8*).

15 Brakes

Table of Contents

Exploded View - Front Brake Master Cylinder Rocket III, Classic and Roadster 15.5
Exploded View - Front Brake Master Cylinder Rocket III Touring 15.6
Exploded View - Front Brake Caliper and Disc 15.7
Exploded View - Rear Brake Master Cylinder - Rocket III and Classic 15.8
Exploded View - Rear Brake Master Cylinder - Rocket III Touring 15.9
Exploded View - Rear Brake Master Cylinder - Rocket III Roadster 15.10
Exploded View - Rear Brake Caliper and Disc - Rocket III, Classic and Roadster 15.11
Exploded View - Rear Brake Caliper and Disc - Rocket III Touring 15.12
Exploded View - ABS System - Rocket III Touring ABS - Rocket III Roadster 15.13
Braking System Maintenance Safety Precautions 15.14
Brake Fluid Level Inspection 15.15
- Front Brake Fluid Level Inspection 15.15
- Rear Brake Fluid Level Inspection 15.16

Changing Brake Fluid 15.17
Brake Pads 15.17
Brake Wear Inspection 15.17
Breaking-in New Brake Pads and Discs 15.17
Bleeding the Front Brakes, Renewing Brake Fluid 15.18
Front Brake Pads 15.20
- Removal 15.20
- Installation 15.21

Front Brake Caliper 15.22
- Removal 15.22
- Disassembly 15.23
- Inspection 15.23
- Assembly 15.24
- Installation 15.25

Front Discs 15.25
- Wear 15.25
- Removal 15.26
- Installation 15.26

Front Brake Master Cylinder - Rocket III, Rocket III Classic and Rocket III Roadster 15.27
Removal 15.27
Disassembly 15.27
Inspection 15.28
Assembly 15.28
Installation 15.29
Front Brake Master Cylinder - Rocket III Touring 15.30
Removal 15.30
Disassembly 15.31
Inspection 15.32
Assembly 15.32
Installation 15.33
Bleeding the Rear Brakes, Renewing Brake Fluid 15.34
Rear Brake Pads, Rear Brake Caliper 15.36
Removal 15.36
Installation 15.37
Rear Brake Caliper 15.38
Removal 15.38
Disassembly 15.39
Assembly 15.40
Rear Brake Disc 15.41
Wear 15.41
Removal 15.41
Installation 15.41
Rear Master Cylinder 15.42
Removal 15.42
Disassembly 15.43
Inspection 15.44
Assembly 15.44
Installation 15.45
Rear Master Cylinder Rocket III Roadster 15.46
Removal 15.46
Installation 15.47
Bleeding the Front Brakes, Renewing Brake Fluid - Rocket III Touring - ABS and Rocket III Roadster 15.48
Front ABS Wheel Speed Sensor- Rocket III Touring - ABS and Rocket III Roadster 15.49
Removal 15.49
Installation 15.50
Front ABS Pulser Ring - Rocket III Touring - ABS and Rocket III Roadster 15.51
Removal 15.51
Inspection 15.51
Installation 15.51
Bleeding the Rear Brakes, Renewing Brake Fluid - Rocket III Touring - ABS and Rocket III Roadster 15.52

Rear ABS Wheel Speed Sensor- Rocket III Touring - ABS and Rocket III Roadster 15.53
Removal 15.53
Installation 15.53
Rear ABS Pulser Ring- Rocket III Touring - ABS and Rocket III Roadster 15.53
Removal 15.53
Inspection 15.53
Installation 15.53
ABS Hydraulic Modulator/ECM - Rocket III Touring - ABS and Rocket III Roadster 15.54
Removal 15.54
Installation 15.56
Anti-lock Brake System (ABS) 15.58
System Description 15.58
ABS System Circuit Diagram - Rocket III Touring ABS and Rocket III Roadster 15.60
Key To Wiring Circuit Diagram 15.60
Key To Wiring Colour Codes 15.60
ABS ECM Connector Pin Numbering 15.60
ABS System Circuit Diagrams - Rocket III Touring ABS and Rocket III Roadster 15.61
System Diagnostics - Rocket III Touring ABS and Rocket III Roadster 15.62
Diagnostic Tool Connection 15.62
Triumph Diagnostic Tool 15.63
Build Data - Rocket III Touring ABS and Rocket III Roadster 15.63
Current Data - Rocket III Touring ABS and Rocket III Roadster 15.63
Bleed System 15.63
Diagnostic Trouble Codes - Rocket III Touring ABS and Rocket III Roadster 15.64
Diagnostic Trouble Codes - Rocket III Touring ABS and Rocket III Roadster 15.65
Electrical Connectors - Rocket III Touring ABS and Rocket III Roadster 15.67
Before Disconnection: 15.67
When Disconnecting a Connector: 15.67
When Inspecting a Connector: 15.67
When Connecting a Connector: 15.67
Disconnection of ABS ECM connector - Rocket III Touring ABS and Rocket III Roadster 15.68
Reconnection of ABS ECM connector - Rocket III Touring ABS and Rocket III Roadster 15.68
Further Diagnosis - Rocket III Touring ABS and Rocket III Roadster 15.69
Pinpoint Tests 15.69
Before starting pinpoint tests: 15.69
After completion of the pinpoint tests: 15.69
ABS Warning Light ON (No DTCs Stored) - Rocket III Touring ABS and Rocket III Roadster 15.70
Circuit Diagram - Rocket III Touring ABS and Rocket III Roadster 15.71
ABS Warning Light Does not Illuminate (No DTCs Stored) - Rocket III Touring ABS and Rocket III Roadster 15.72
Circuit Diagram - Rocket III Touring ABS and Rocket III Roadster 15.73
Front Wheel Sensor Open Circuit/Short Circuit - Rocket III Touring ABS and Rocket III Roadster 15.74
Circuit Diagram - Rocket III Touring ABS and Rocket III Roadster 15.75

Rear Wheel Sensor Open Circuit/Short Circuit - Rocket III Touring ABS and Rocket III Roadster 15.76
Circuit Diagram - Rocket III Touring ABS and Rocket III Roadster 15.77
Front Wheel Sensor Abnormal Input/Losing Contact - Rocket III Touring ABS and Rocket III Roadster 15.78
Rear Wheel Sensor Abnormal Input/Losing Contact - Rocket III Touring ABS and Rocket III Roadster 15.79
Front Wheel Pulser Gear Missing Teeth - Rocket III Touring ABS and Rocket III Roadster 15.80
Rear Wheel Pulser Gear Missing Teeth - Rocket III Touring ABS and Rocket III Roadster 15.81
Front or Rear Input/output solenoid Open/Short Circuit - Rocket III Touring ABS and Rocket III Roadster 15.82
Front or Rear Wheel Actuator (Hydraulic Control) Wheel Lock - Rocket III Touring ABS and Rocket III Roadster 15.83
Motor - Lock; Motor Stuck OFF; Motor Stuck ON - Rocket III Touring ABS and Rocket III Roadster 15.84
Power Source Voltage Drop/Voltage Rise - Rocket III Touring ABS and Rocket III Roadster 15.85
Different Tyre Diameter - Rocket III Touring ABS and Rocket III Roadster 15.86
Abnormal ECU - Rocket III Touring ABS and Rocket III Roadster 15.87
ABS Hydraulic Circuit Layout - Rocket III Touring ABS and Rocket III Roadster 15.88

Exploded View - Front Brake Master Cylinder Rocket III, Classic and Roadster

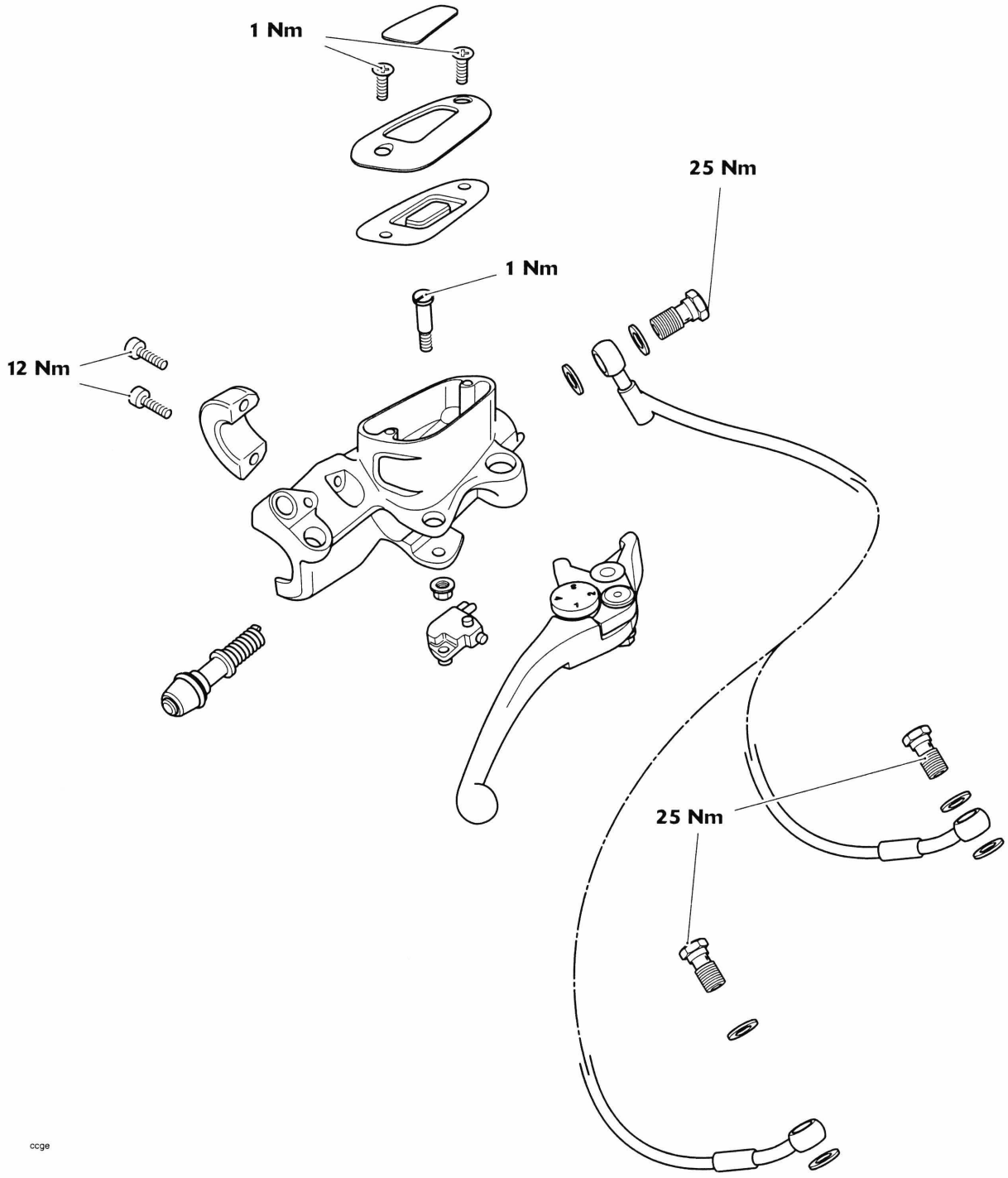

Exploded View - Front Brake Master Cylinder Rocket III Touring

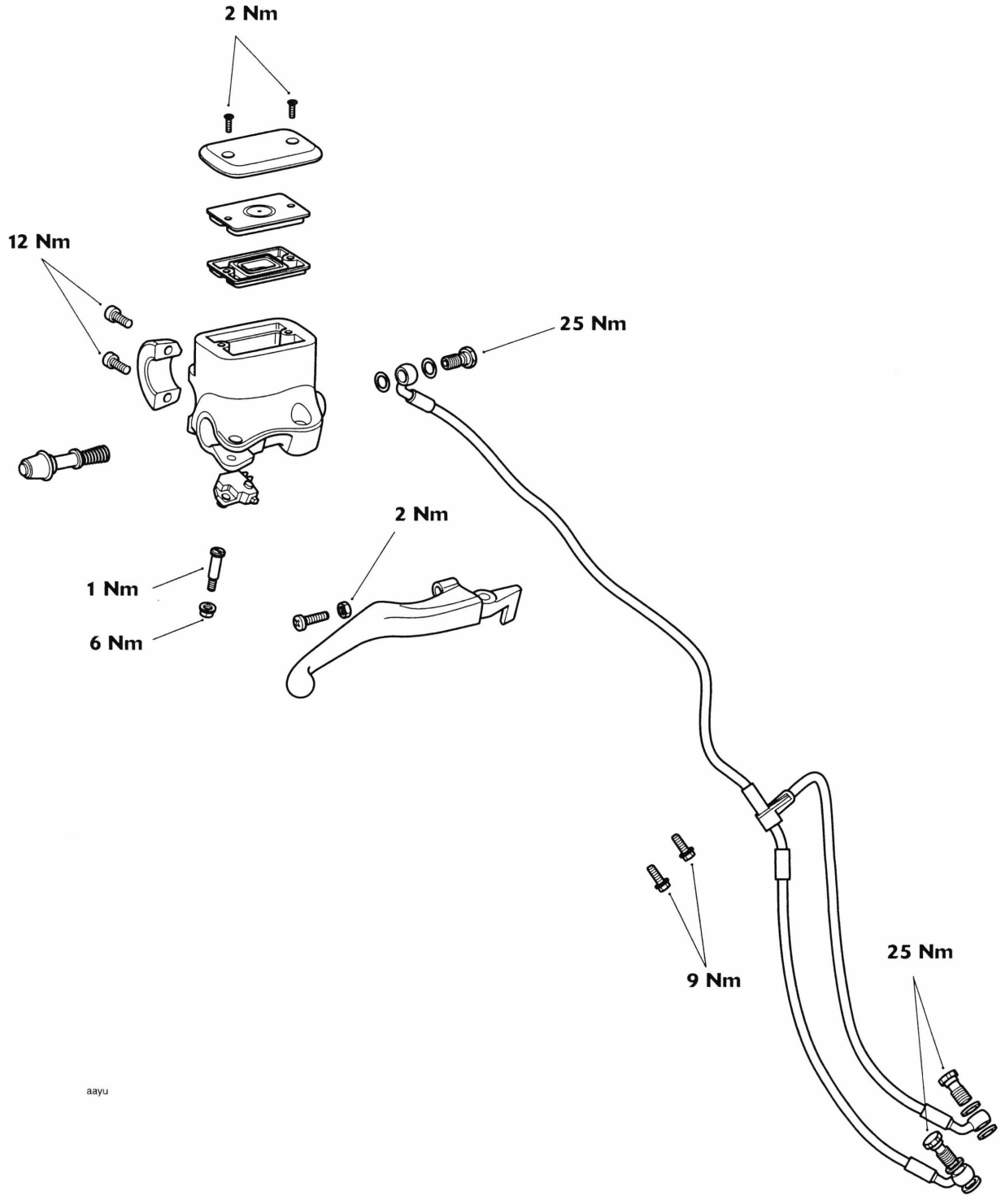

Exploded View - Front Brake Caliper and Disc

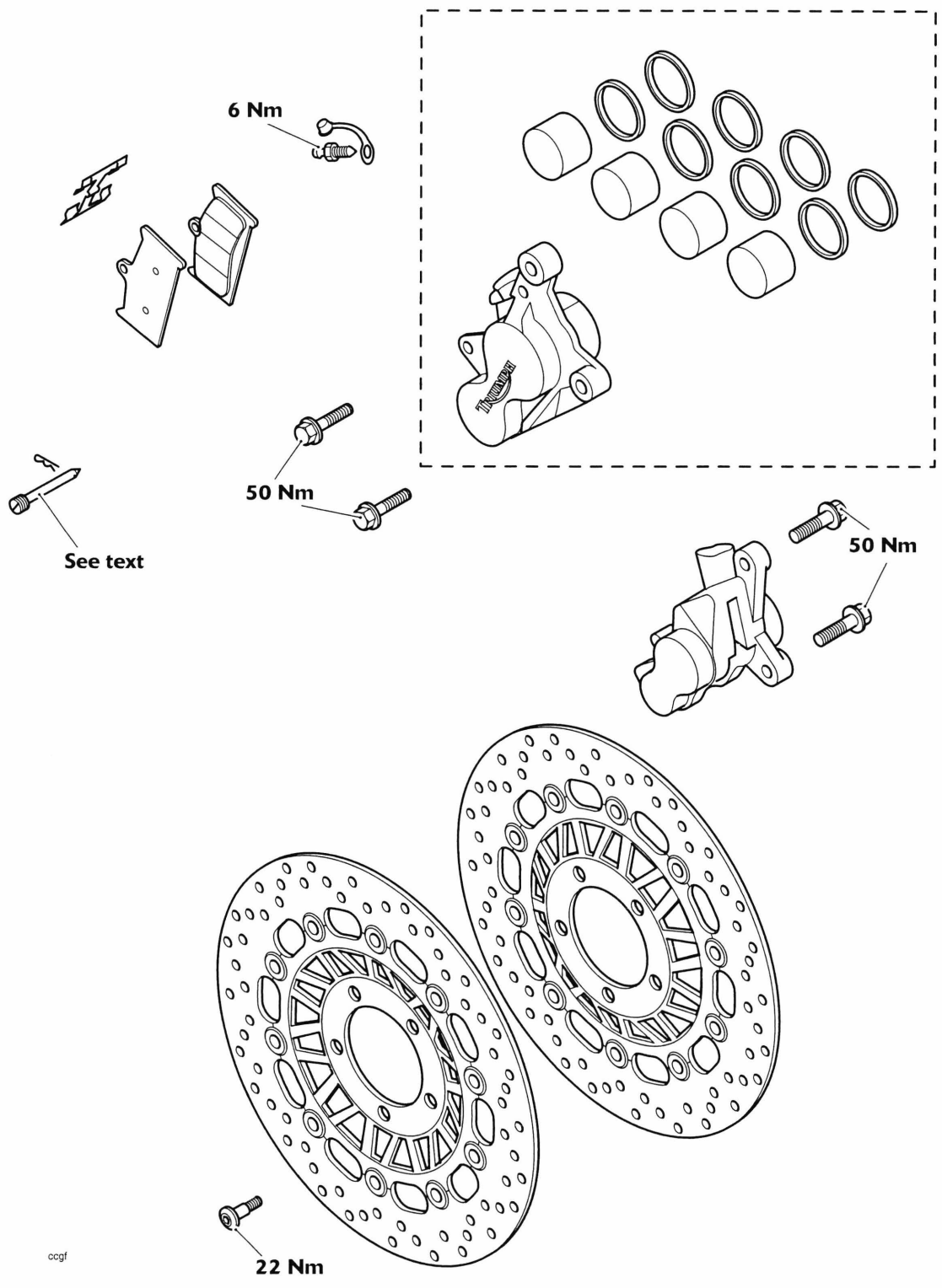

Exploded View - Rear Brake Master Cylinder - Rocket III and Classic

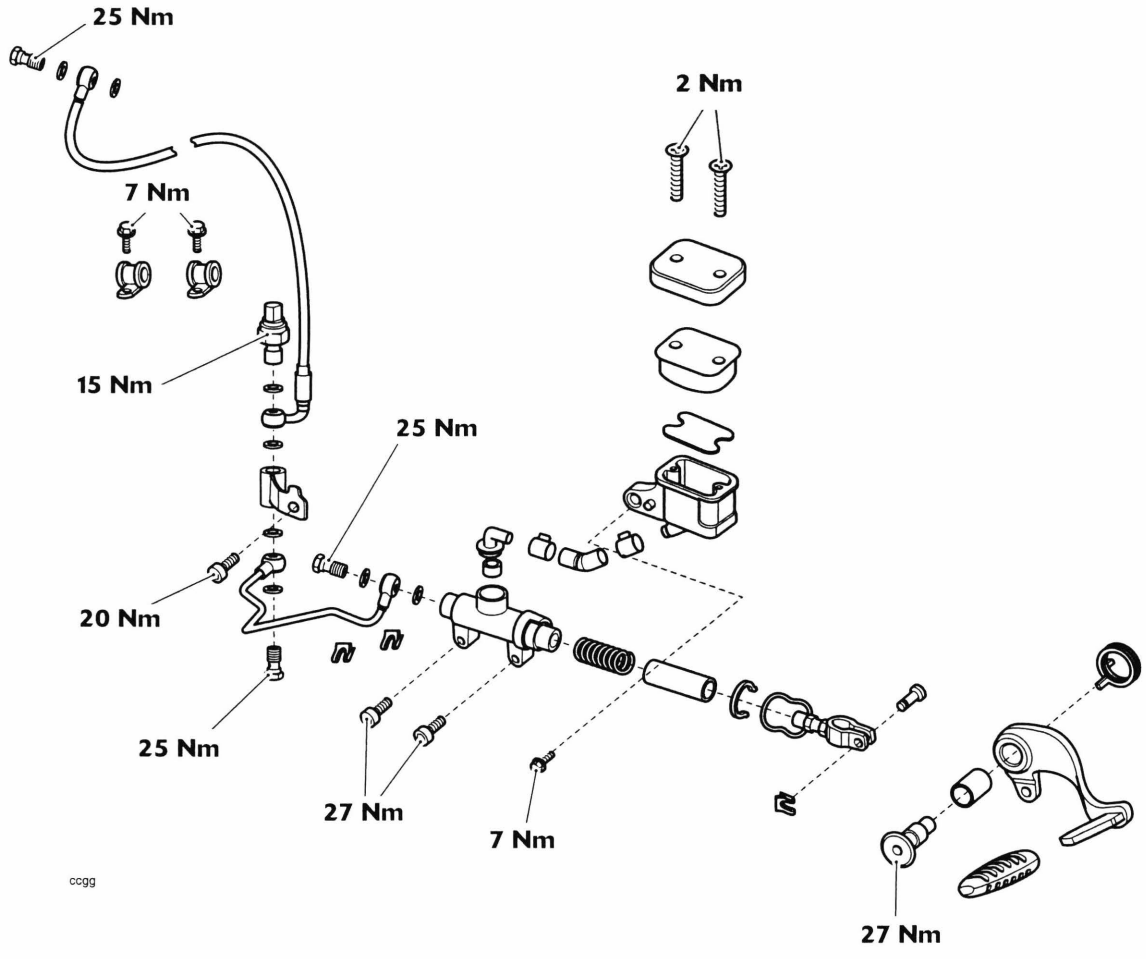

Exploded View - Rear Brake Master Cylinder - Rocket III Touring

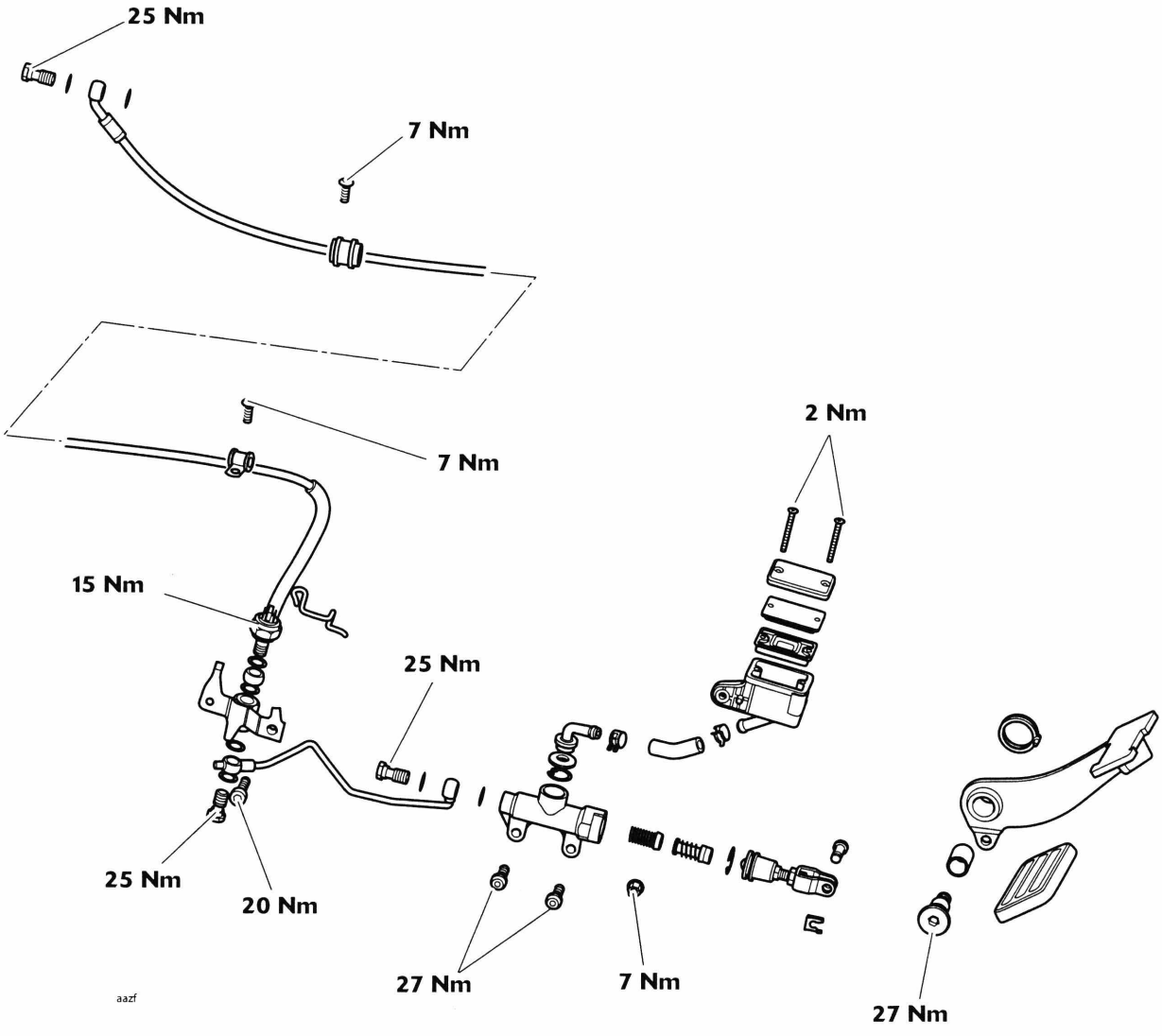

Exploded View - Rear Brake Master Cylinder - Rocket III Roadster

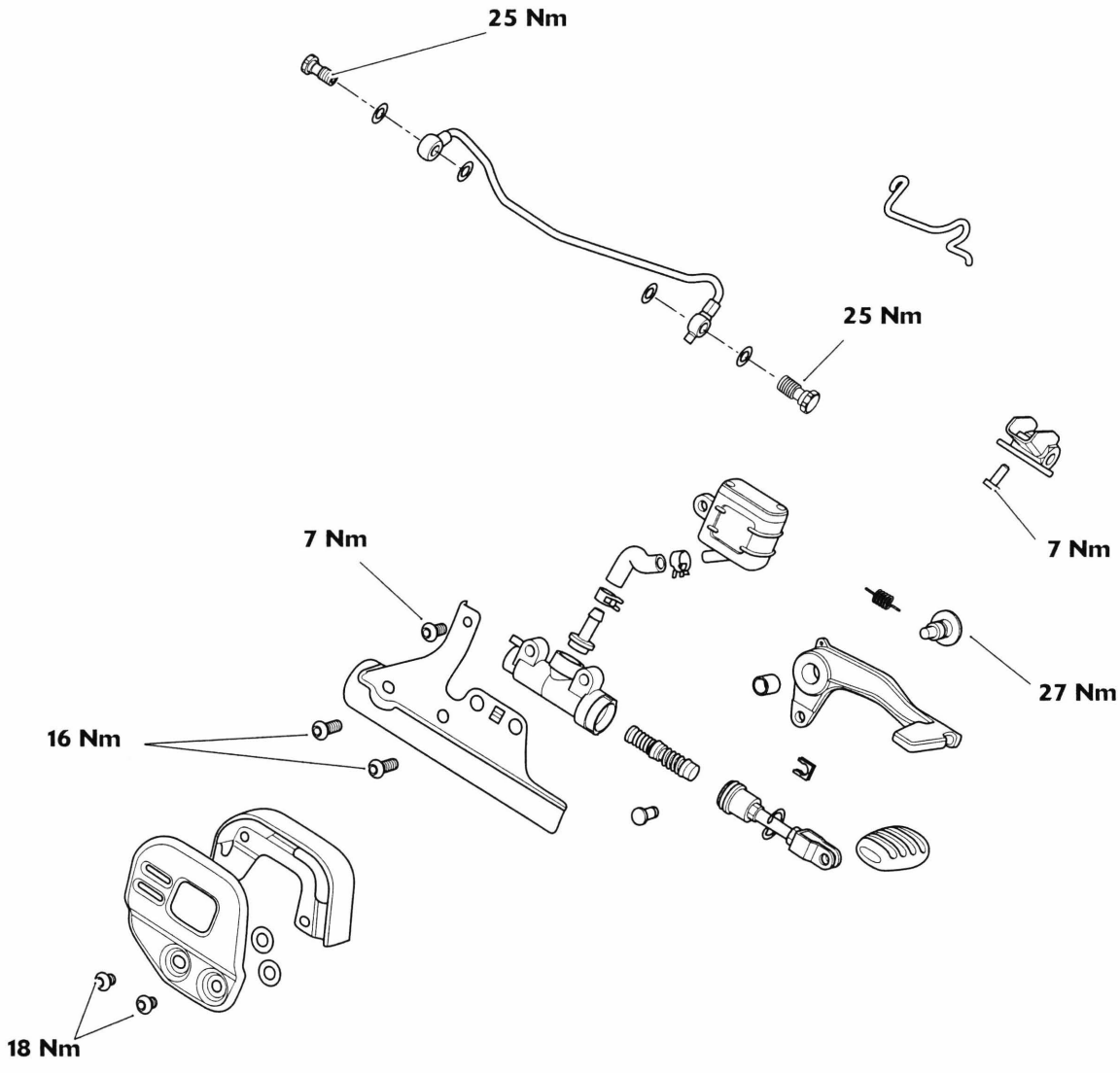

Exploded View - Rear Brake Caliper and Disc - Rocket III, Classic and Roadster

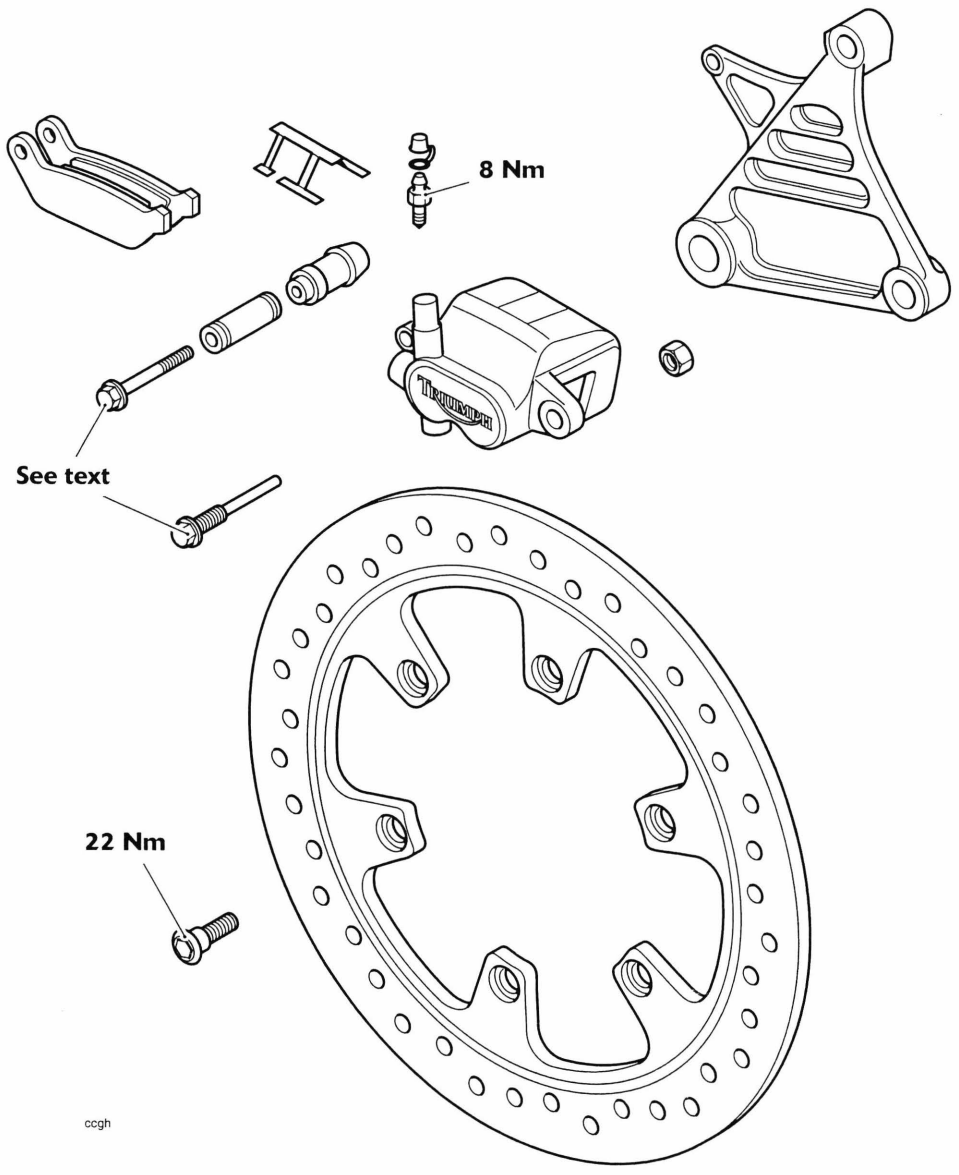

Exploded View - Rear Brake Caliper and Disc - Rocket III Touring

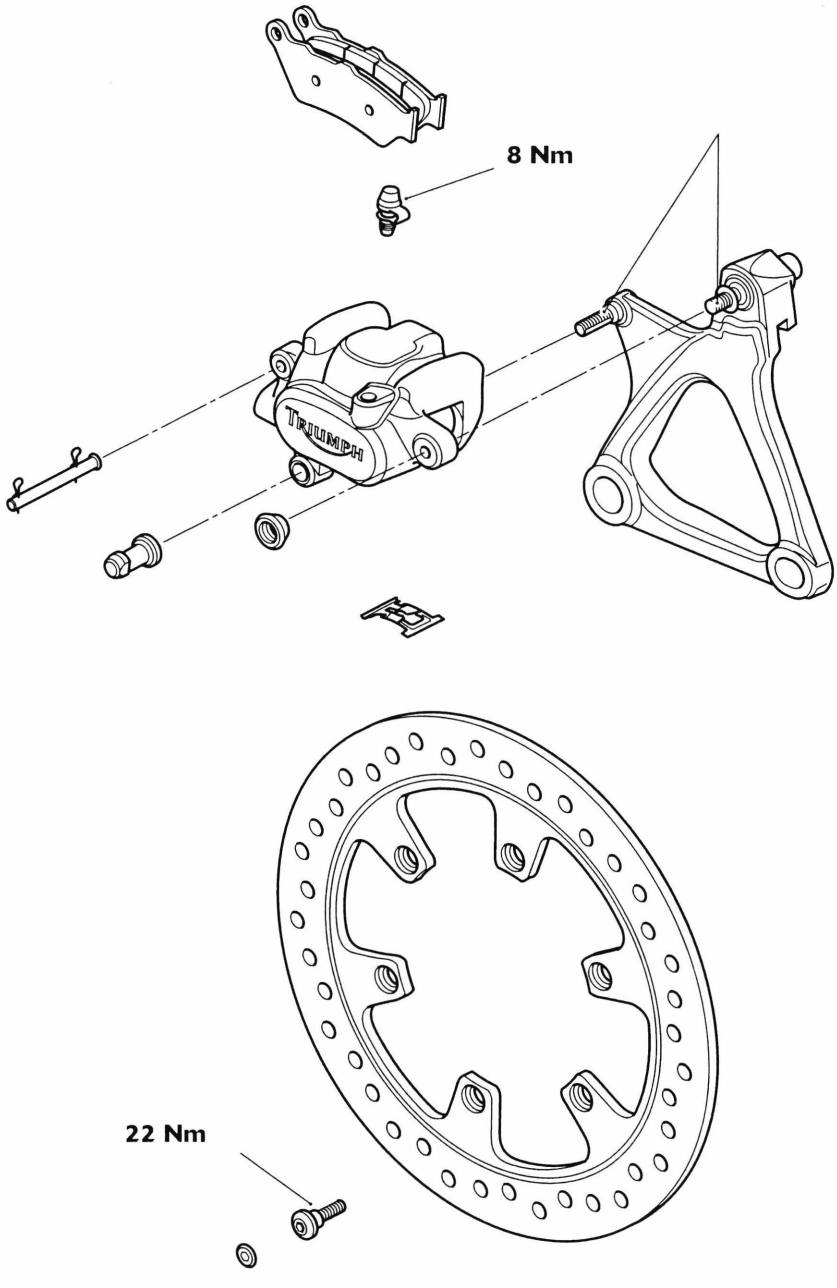

Exploded View - ABS System - Rocket III Touring ABS - Rocket III Roadster

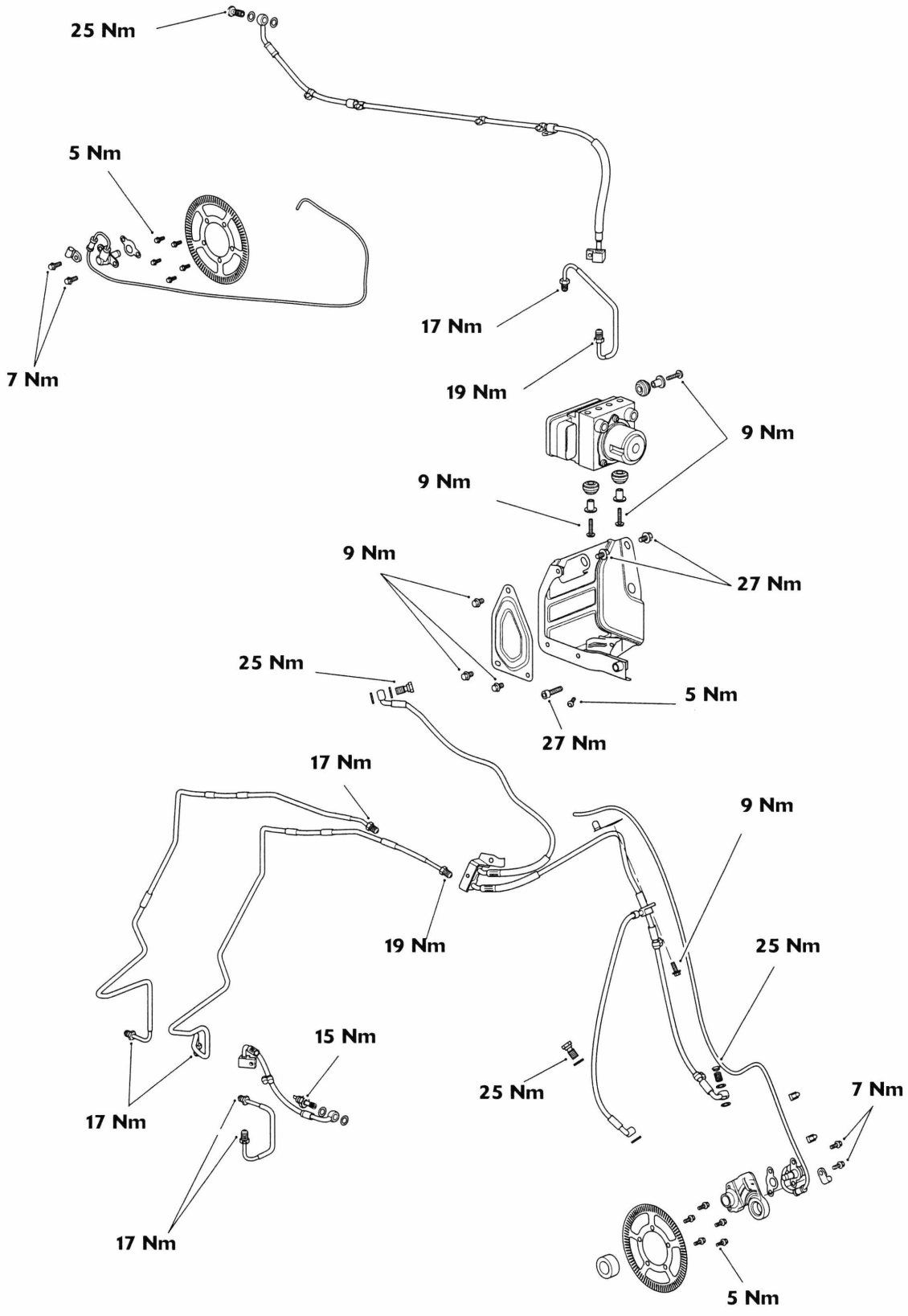

Braking System Maintenance Safety Precautions

Warning

Brake fluid is hygroscopic which means it will absorb moisture from the air. The absorbed moisture will greatly reduce the boiling point of the brake fluid causing a reduction in braking efficiency.

Replace brake fluid in line with the scheduled maintenance chart. A dangerous riding condition could result if this important maintenance item is neglected.

Do not spill brake fluid onto any area of the bodywork as this will damage any painted or plastic surface.

Always use new brake fluid from a sealed container and never use fluid from an unsealed container or from one that has been previously opened.

Do not mix different brands of fluid. Check for fluid leakage around brake fittings, seals and joints.

Check regularly for brake hose damage.

FAILURE TO OBSERVE ANY OF THE ABOVE WARNINGS MAY REDUCE BRAKING EFFICIENCY LEADING TO LOSS OF MOTORCYCLE CONTROL AND AN ACCIDENT.

Warning

If there has been an appreciable drop in the level of the fluid in either brake fluid reservoir, consult your authorised Triumph dealer before riding.

If the brake lever or pedal feels soft when it is applied, or if the lever/pedal travel becomes excessive, there may be air in the brake lines or the brake may be defective.

It is dangerous to operate the motorcycle under such conditions and you must have your authorised Triumph dealer take remedial action before you attempt to ride the motorcycle again. Failure to take remedial action may reduce braking efficiency leading to loss of motorcycle control and an accident.

Warning

Use only DOT 4 specification brake fluid as listed in the General Information section of this manual. The use of brake fluids other than those DOT 4 fluids listed in the General Information section may reduce the efficiency of the braking system leading to loss of motorcycle control and an accident.

Failure to change the brake fluid at the interval specified in the scheduled maintenance chart may reduce braking efficiency resulting in loss of motorcycle control and an accident.

Warning

Never use mineral based grease in any part of the braking system or in any area where contact with the braking system is possible. Mineral based grease will damage the hydraulic seals in the calipers and master cylinders. Damage caused by contact with mineral based grease may reduce braking efficiency resulting in loss of motorcycle control and an accident.

Warning

Before installation, all internal brake components should be cleaned and lubricated with clean new DOT 4 brake fluid.

Never use solvents, petrol (gasoline), engine oil or any other petroleum distillate on internal brake components as this will cause deterioration of the hydraulic seals in the calipers and master cylinders.

A dangerous riding condition leading to loss of motorcycle control and an accident could result if this warning is ignored.

Brake Fluid Level Inspection

Warning

Before starting work, ensure the motorcycle is stabilised and adequately supported. This will help prevent it from falling and causing injury to the operator or damage to the motorcycle.

In accordance with the scheduled maintenance chart, inspect the brake fluid levels in the front and rear master cylinder reservoirs.

Front Brake Fluid Level Inspection

1. Ensure that the brake fluid level in the front brake fluid reservoir is between the upper and lower level lines (reservoir held horizontal).

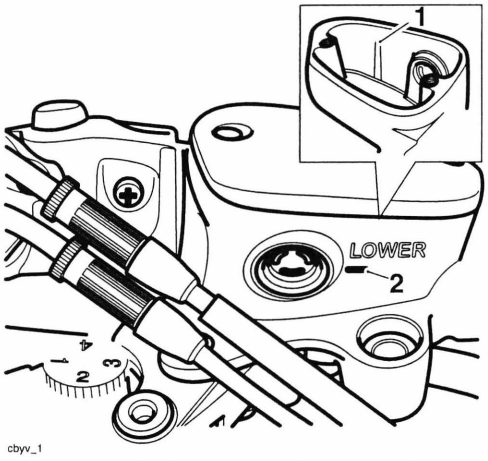

Rocket III, Rocket III Classic and Rocket III Roadster

1. **Front reservoir upper level**
2. **Front reservoir lower level**

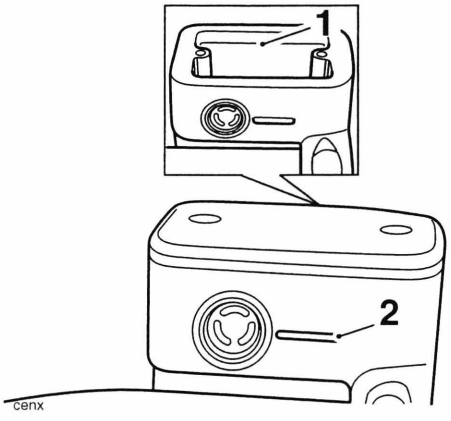

Rocket III Touring

1. **Front reservoir upper level**
2. **Front reservoir lower level**

2. To inspect the fluid level, check the level of fluid visible in the window at the front of the reservoir body.
3. To adjust the fluid level:
   - Release the cap screws and detach the cover noting the position of the sealing diaphragm.
   - Fill the reservoir to the upper level line using new DOT 4 fluid from a sealed container.
   - Refit the cover, ensuring that the diaphragm seal is correctly positioned between the cap and reservoir body. Tighten the cap retaining screws.

Rear Brake Fluid Level Inspection

Warning

Before starting work, ensure the motorcycle is stabilised and adequately supported. This will help prevent it from falling and causing injury to the operator or damage to the motorcycle.

In accordance with the scheduled maintenance chart, inspect the brake fluid level in the rear master cylinder reservoir.

1. Ensure that the brake fluid level in the rear brake fluid reservoir is between the upper and lower level lines (reservoir held horizontal).

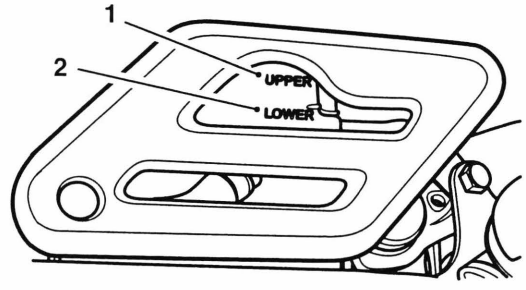

cenx_2

Rocket III, Rocket III Classic and Rocket III Touring

1. Rear reservoir lower level
2. Rear reservoir upper level

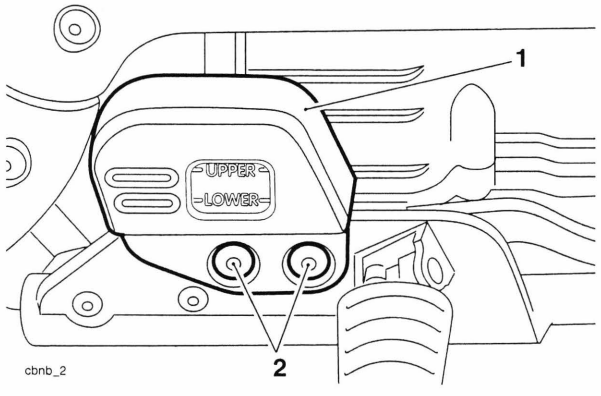

cbnb_2

Rocket III Roadster

1. Rear reservoir lower level
2. Rear reservoir upper level

2. To adjust the fluid level:
   - Release the cap screws and detach the cover noting the position of the sealing diaphragm.
   - Fill the reservoir to the upper level line using new DOT 4 fluid from a sealed container.
   - Refit the cover, ensuring that the diaphragm seal is correctly positioned between the cap and reservoir body. Tighten the cap retaining screws.

Changing Brake Fluid

Brake fluid must be changed every two calendar years, irrespective of the mileage the motorcycle has covered in that time.

Brake Pads

Front and rear brake pad wear is automatically compensated for and has no effect on brake lever or pedal action.

Brake Wear Inspection

In accordance with the scheduled maintenance chart, inspect the brake pads for wear. The minimum thickness of lining material for any front or rear brake pad is 1.5 mm. If any pad has worn to the bottom of the groove in the pad centre, replace all the brake pads on that wheel.

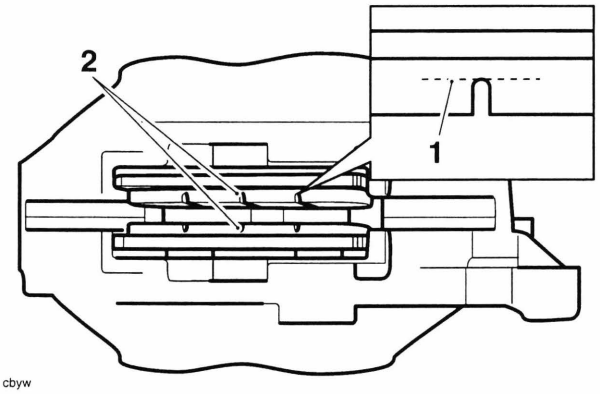

cbyw

1. Lining material thickness
2. Centre groove

Warning

Do not replace individual brake pads, replace both pads in the brake caliper. On the front where two calipers are mounted on the same wheel, all the pads in both calipers must be replaced simultaneously. Replacing individual pads will reduce braking efficiency and may cause loss of motorcycle control and an accident.

Breaking-in New Brake Pads and Discs

After replacement brake discs and/or pads have been fitted to the motorcycle, we recommend a period of careful breaking-in that will optimise the performance and longevity of the discs and pads. The recommended distance for breaking-in new pads and discs is 200 miles (300 km).

After fitting new brake discs and/or pads avoid extreme braking, ride with caution and allow for greater braking distances during the breaking-in period.

Bleeding the Front Brakes, Renewing Brake Fluid

Note:

- **Models with ABS brakes: Refer to bleeding ABS brakes later in this section (see page *15-48*).**

Warning

Before starting work, ensure the motorcycle is stabilised and adequately supported. This will help prevent it from falling and causing injury to the operator or damage to the motorcycle.

1. **Rocket III and Classic only:** Note the original setting of the brake lever adjuster in order that it can be returned to the same position when the bleeding operation is complete. Set the brake lever adjuster to position No.1.

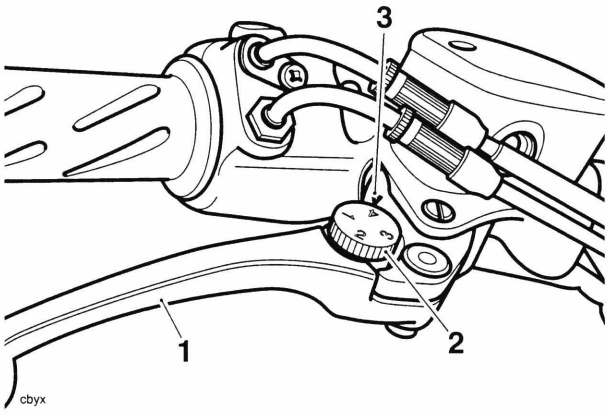

1. Lever
2. Adjuster wheel
3. Triangular mark

2. Turn the handlebars to bring the fluid reservoir to a level position.
3. Remove the screws from the reservoir cover.

Warning

Ensure absolute cleanliness when adding brake fluid to the brake fluid reservoir. Do not allow moisture or debris to enter the cylinder, as this will adversely affect the fluid properties. Always use fluid from a sealed container and do not use fluid from a container that has been opened for any period of time. Always check for fluid leakage around hydraulic fittings and for damage to hoses. A dangerous riding condition leading to loss of motorcycle control and an accident could result if this warning is ignored.

Caution

To prevent paint damage, do not spill brake fluid onto any area of the bodywork. Spilled brake fluid will damage paintwork.

4. Carefully remove the reservoir cover taking care not to spill any fluid.
5. Check the condition of the sealing diaphragm for the reservoir. Replace if necessary.

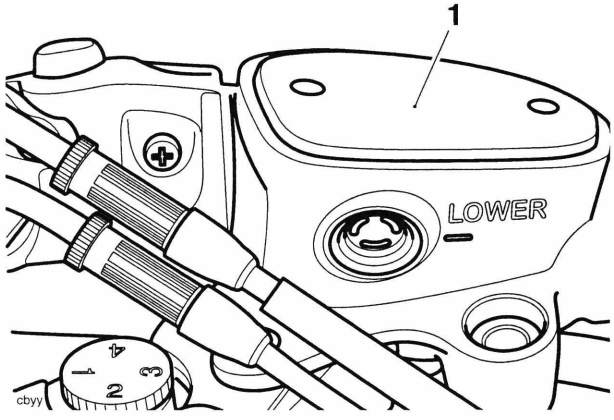

Rocket III and Classic shown, Rocket III Touring similar

1. Diaphragm

6. Undo and remove the bolts securing the front brake caliper to the fork and manoeuvre the caliper clear of the brake disc. Do not remove the brake hose connected to the caliper.

Warning

Do not allow the caliper to hang on the brake hose as this may damage the hose and could lead to an accident.

7. Obtain a suitable, wide, flat metal plate which is approximately 2 mm thick and place it between the brake pads. Pump the front brake lever a few times until the metal plate is held in place by the brake pads.

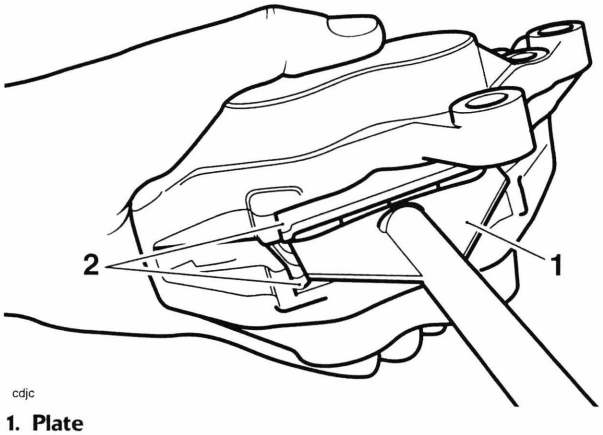

1. Plate
2. Brake pads

8. Remove the rubber cap from the bleed nipple on the caliper.
9. Whilst supporting the front brake caliper, attach a transparent tube to the bleed nipple and place the other end of the tube in a suitable receptacle containing new brake fluid. Keep the tube end below the level of fluid.
10. Support the caliper so that the bleed nipple is uppermost.

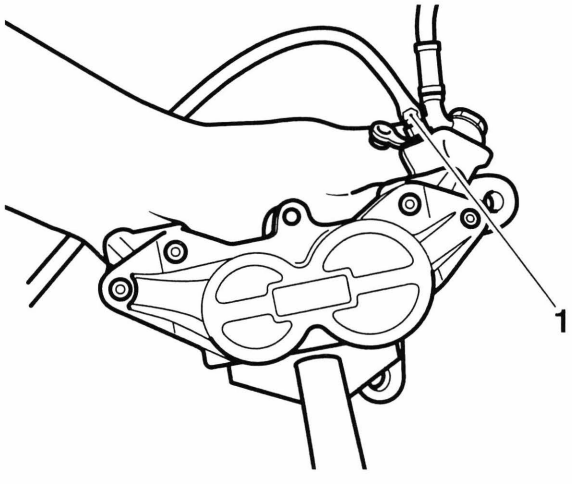

1. Bleed nipple

11. Release the bleed nipple.

Note:

- **During bleeding, do not allow the fluid level to fall below the lower level mark in the reservoir. If the fluid level is allowed to fall below this mark, air may enter the system and the sequence of bleeding must be repeated.**

12. Get an assistant to slowly pull the brake lever to the handlebar.
13. With the lever held fully against the handlebar, close the bleed nipple. Once the bleed nipple is closed, release the brake lever.
14. Repeat steps 12 and 13 until no more air appears in the bleed tube.
15. When all air has been expelled from the system, hold the lever fully against the handlebar and close the bleed nipple.
16. Remove the transparent bleed tube.
17. Using the flat metal plate, gently push the brake pads apart to allow clearance for the brake disc when the caliper is refitted.

⚠ Warning

Brake fluid may be displaced as the caliper pistons are compressed. To prevent bodywork damage, ensure that the displaced fluid does not come into contact with any part of the bodywork or wheel.

18. Secure the caliper to the front fork using the original fixings. Tighten the fixings to **50 Nm**.
19. Refit the transparent bleed tube and repeat steps 12 to 13 until no more air appears in the bleed tube.

Note:

- **Maintain the brake fluid level between the upper and lower reservoir levels whilst bleeding is being carried out.**

20. Tighten the bleed nipple to **6 Nm**.
21. Remove the bleed tube.
22. Replace the bleed nipple cap.
23. Fill the reservoir to the upper level with new DOT 4 fluid.

⚠ Warning

Use only DOT 4 specification brake fluid as listed in the General Information section of this manual. The use of brake fluids other than those DOT 4 fluids listed in the General Information section may reduce the efficiency of the braking system leading to loss of motorcycle control and an accident.

Observe the brake fluid handling warnings given earlier in this section of the manual.

⚠ Caution

To prevent paint damage, do not spill brake fluid onto any area of the bodywork. Spilled brake fluid will damage paintwork.

24. Repeat the procedure for the left hand caliper.
25. When both calipers have been bled, ensure the brake lever operation has a firm resistive feel to it, does not feel spongy and that the lever cannot be pulled directly back to the handlebar. Take remedial action as necessary.
26. Refit the diaphragm and reservoir cover. Tighten the screws to **1 Nm**.

Warning

Always return the lever adjuster to the original setting as noted in paragraph 1. Operating the motorcycle with lever settings that are unfamiliar may lead to loss of control or an accident.

27. **Rocket III and Classic only:** Reset the brake lever adjuster to the original setting.
28. Check the operation of the front brake. Rectify as necessary.

Warning

It is dangerous to operate the motorcycle with defective brakes and you must have your authorised Triumph dealer take remedial action before you attempt to ride the motorcycle again. Failure to take remedial action may reduce braking efficiency leading to loss of motorcycle control and an accident.

Front Brake Pads

Removal

Warning

Before starting work, ensure the motorcycle is stabilised and adequately supported. This will help prevent it from falling and causing injury to the operator or damage to the motorcycle.

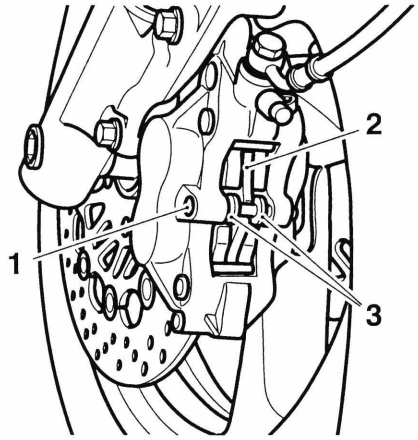

cbza

1. Retaining pin
2. Anti-rattle spring
3. Brake pads

1. Remove the brake pad retaining pin after removing and discarding its split pin. Inspect the retaining pin for damage.
2. Remove the anti-rattle spring and inspect the spring for damage.

Caution

In the following operation, never lever directly against the disc, caliper or the pad lining material as this will damage these components. Always use a levering tool made from a soft material that will not cause damage to the load bearing surfaces.

Brake fluid will be displaced as the caliper pistons are compressed. To prevent paint damage, ensure that the displaced fluid does not come into contact with any part of the bodywork.

3. Carefully push the brake pads apart to force the caliper pistons back and allow withdrawal of the pads.
4. Remove both brake pads and inspect for damage and wear beyond the service limit.

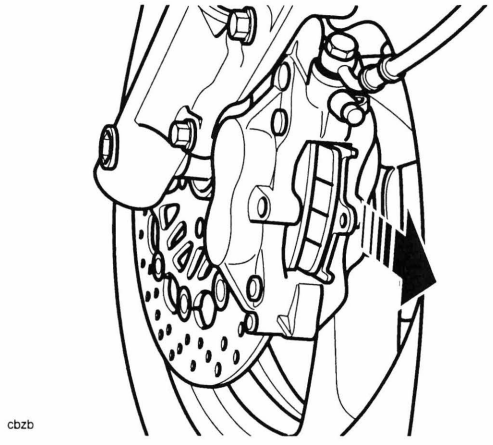

Brake Pad Removal

Note:

- **Complete the assembly of the brake pads to one caliper (see assembly for details) before removing the pads from the other caliper.**

Installation

Warning

Never use mineral based grease in any part of the braking system or in any area where contact with the braking system is possible. Mineral based grease will damage the hydraulic seals in the calipers and master cylinders.

Damage caused by contact with mineral based grease may reduce braking efficiency resulting in loss of motorcycle control and an accident.

1. Fit new brake pads as an axle set or, if all the pads are in a serviceable condition, clean the pad grooves before refitting all pads in their original positions.

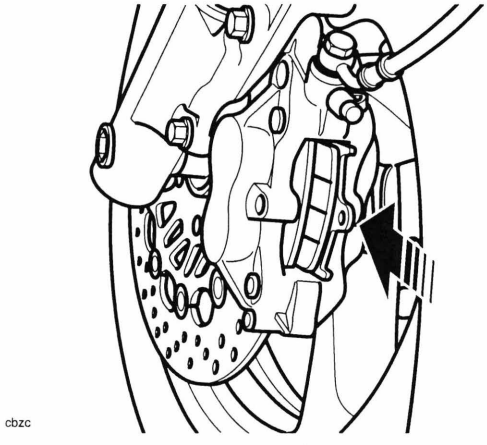

Installing Brake Pads

Warning

Do not apply more than a minimum coating of grease to the pad retaining pins. Excess grease may contaminate the brake pads, hydraulic seals and discs causing reduced braking efficiency leading to loss of motorcycle control and an accident.

2. Lubricate the pad retaining pins using a minimum amount of proprietary high temperature brake grease.
3. Fit the anti-rattle spring over the pads and push down in the centre to allow the pad retaining pin to slide across the top of the spring.
4. Tighten the pad retaining pin to **18 Nm**, and secure with a new split pin.
5. Pump the brake lever to correctly position the caliper pistons.

Warning

Use only DOT 4 specification brake fluid as listed in the General Information section of this manual. The use of brake fluids other than those DOT 4 fluids listed in the General Information section may reduce the efficiency of the braking system leading to an accident. Observe the brake fluid handling warnings given on page *1.4*.

Caution

To prevent paint damage, do not spill brake fluid onto any area of the bodywork. Spilled brake fluid will damage paintwork.

6. Check the front brake fluid level and top up as required with new DOT 4 fluid.
7. Check the operation of the front brake. Rectify as necessary.

Warning

It is dangerous to operate the motorcycle with defective brakes and you must have your authorised Triumph dealer take remedial action before you attempt to ride the motorcycle again. Failure to take remedial action may reduce braking efficiency leading to loss of motorcycle control and an accident.

Front Brake Caliper

Removal

Warning

Before starting work, ensure the motorcycle is stabilised and adequately supported. This will help prevent it from falling and causing injury to the operator or damage to the motorcycle.

Caution

To prevent paint damage, do not spill brake fluid onto any area of the bodywork. Spilled brake fluid will damage paintwork.

1. Disconnect the brake hose at the caliper and place the free end of the hose in a suitable container to collect any displaced brake fluid.
2. Remove the brake pads (see page *15-20*).
3. Remove the two caliper bolts.
4. Manoeuvre the caliper clear of the disc, taking care not to damage the wheel.

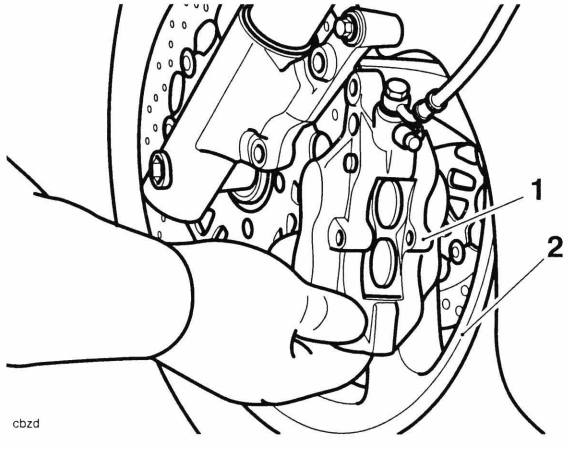

1. Caliper
2. Wheel

Disassembly

1. Remove the four bolts which secure the two halves of the brake caliper together. Discard the bolts.

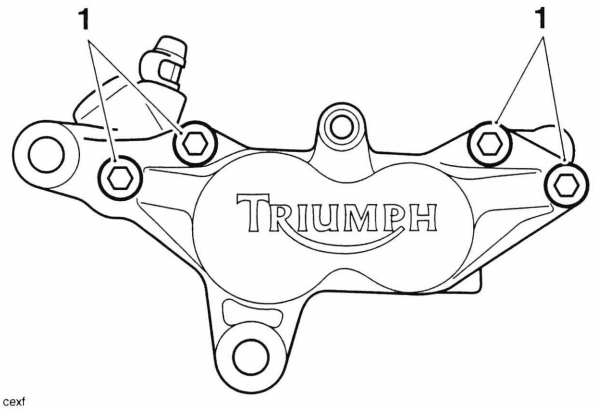

cexf

1. Bolts

2. Carefully split the two halves of the caliper then remove and discard the two joint seals.

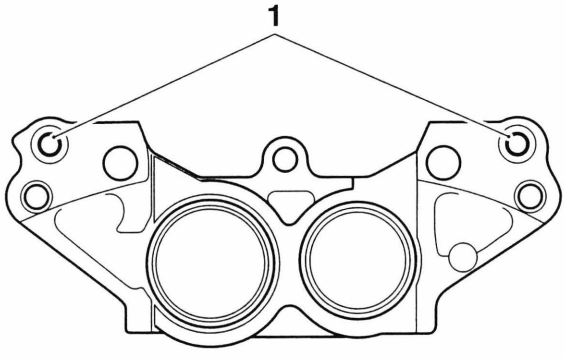

cexg

1. Joint seals

Warning

To prevent injury, never place fingers or hands inside the caliper opening when removing the pistons. Always wear eye, hand and face protection when using compressed air. Eye, face and skin damage will result from direct contact with compressed air or brake fluid.

Warning

Ensure that the caliper bores do not become scratched during piston removal and assembly. Ensure that the pistons remain square to their bores during fitment otherwise damage to the caliper could result.

A dangerous riding condition leading to an accident could result if this warning is ignored.

3. Cover the caliper half with a clean, heavy cloth and, using compressed air, remove the pistons, one at a time.

Warning

Ensure the seal grooves in the caliper are not damaged during the removal of the seals. Damage to the seal grooves may allow brake fluid to leak past the seals resulting in a dangerous riding condition leading to loss of motorcycle control and an accident.

4. Remove the old piston seals and the dust seals then thoroughly clean and dry the caliper bores. Discard the old seals.

Inspection

1. Check the pistons and caliper bores for corrosion, scoring and damage. Renew as necessary.

Warning

Always renew caliper seals and pistons after removal from the caliper. An effective hydraulic seal can only be made if new components are used. A dangerous riding condition leading to an accident could result if this warning is ignored.

2. Inspect the brake pads for damage and wear beyond the service limit. Renew as necessary.

Assembly

Warning

Never use mineral based grease in any part of the braking system or in any area where contact with the braking system is possible. Mineral based grease will damage the hydraulic seals in the calipers and master cylinders. A dangerous riding condition leading to loss of motorcycle control and an accident could result from use of mineral grease.

Note:

- **The piston seals are slightly thicker than the dust seals.**

1. Fit new piston seals and dust seals to the caliper bores.

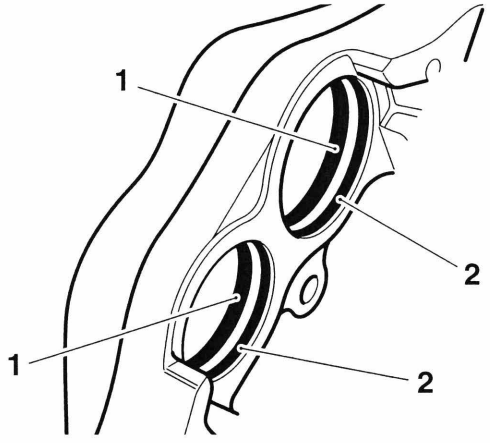

cdff1

1. Piston seal
2. Dust seal

Warning

Ensure that the bores do not become scratched during piston removal and assembly. Ensure that the pistons remain square to their bores during fitment, as incorrect fitment can lead to seal and bore damage. A dangerous riding condition leading to loss of motorcycle control and an accident could result from damaged seals and/or bores.

2. Apply brake fluid to the outside of the caliper pistons and fluid seals.
3. Carefully push the pistons fully and squarely into the caliper bores by hand.
4. Once all seals and pistons have been fitted, carefully clean the mating faces of both sides of the caliper.
5. Fit new joint seals to the recess in one half of the caliper.

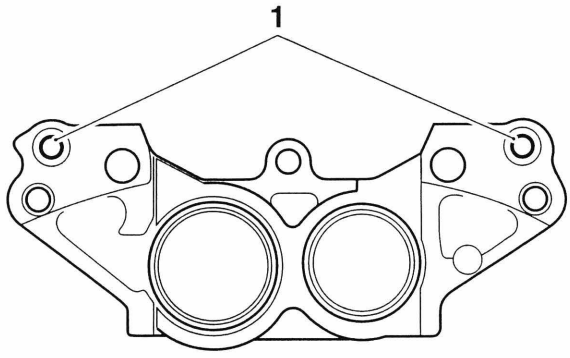

cexg

1. Joint seals

Warning

Ensure the mating surfaces of the caliper halves are clean and free from dust prior to assembly. Failure to ensure that the mating faces are clean and free from dust will result in a dangerous riding condition leading to loss of motorcycle control and an accident.

6. Apply a small drop of threadlocking solution (ThreeBond 1305 or equivalent) to the threads of the new caliper bolts and secure the two halves of the caliper together. Tighten the caliper bolts to **24 Nm**.

Installation

1. Position the caliper over the disc taking care not to damage the wheel.
2. Tighten the caliper bolts to **50 Nm**.
3. Refit the brake pads (see page *15-21*).
4. Connect the brake hose to the caliper incorporating new sealing washers on each side of the union.
5. Tighten the brake hose union bolt to **25 Nm**.

Warning

Use only DOT 4 specification brake fluid as listed in the General Information section of this manual. The use of brake fluids other than those DOT 4 fluids listed in the General Information section may reduce the efficiency of the braking system leading to loss of motorcycle control and an accident.

Observe the brake fluid handling warnings given earlier in this section of the manual.

Caution

To prevent body damage, do not spill brake fluid onto any area of the bodywork. Spilled brake fluid will damage paintwork.

6. Fill the master cylinder with new, DOT 4 brake fluid from a sealed container.
7. Bleed the front brake line (see page *15-17*).
8. Check the operation of the front brake. Rectify as necessary.

Warning

It is dangerous to operate the motorcycle with defective brakes and you must have your authorised Triumph dealer take remedial action before you attempt to ride the motorcycle again. Failure to take remedial action may reduce braking efficiency leading to loss of motorcycle control and an accident.

Front Discs

Warning

Before starting work, ensure the motorcycle is stabilised and adequately supported. This will help prevent it from falling and causing injury to the operator or damage to the motorcycle.

Wear

1. Replace any brake disc if worn beyond the service limit or exceeds the disc run-out limit.

Front Disc Thickness	
Standard	5.0 mm
Service limit	4.5 mm

Disc Run-out	
Standard	0.1 mm
Service limit	0.3 mm

Measure disc run out using an accurate dial gauge mounted on a surface plate.

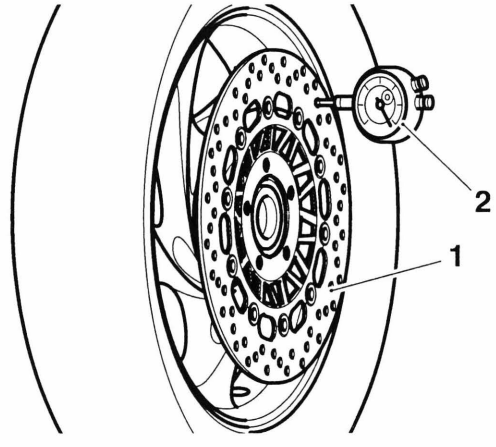

cbzg

1. Disc
2. Dial gauge

Removal

Warning

Do not renew front brake discs individually. Discs must always be renewed in pairs even if one of a pair is serviceable. A dangerous riding condition leading to loss of motorcycle control and an accident could result if this warning is ignored.

1. Remove the front wheel (see page *16-8* for Rocket III and Classic, see page *16-10* for Rocket III Touring).

Warning

To avoid wheel damage, always support the wheel as instructed below. A dangerous riding condition leading to loss of motorcycle control and an accident could result if this warning is ignored.

2. Support the wheel on blocks as illustrated.

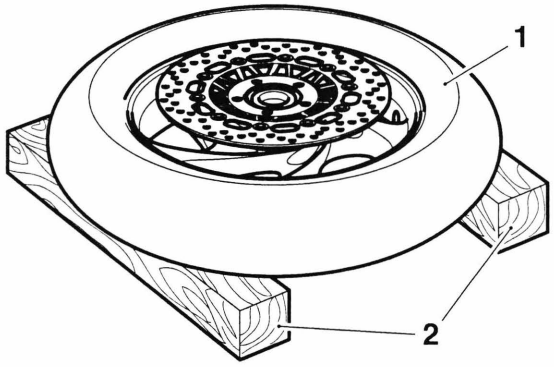

cbzh

1. Wheel
2. Support block

3. Remove and discard the disc securing bolts.
4. Detach the disc.
5. Repeat operations 2, 3 and 4 to remove the disc on the opposite side.

Installation

1. Locate the first disc on the correct side of the wheel (offset of disc outwards) as noted during removal.
2. Fit new disc bolts and tighten to **22 Nm**.
3. Fit the remaining disc in the same way.
4. Refit the wheel (see page *16-9* for Rocket III, Classic and Roadster, see page *16-11* for Rocket III Touring).
5. Check the operation of the front brake. Rectify as necessary.

Warning

It is dangerous to operate the motorcycle with defective brakes and you must have your authorised Triumph dealer take remedial action before you attempt to ride the motorcycle again. Failure to take remedial action may reduce braking efficiency leading to loss of motorcycle control and an accident.

Front Brake Master Cylinder - Rocket III, Rocket III Classic and Rocket III Roadster

Removal

Warning

Before starting work, ensure the motorcycle is stabilised and adequately supported. This will help prevent it from falling and causing injury to the operator or damage to the motorcycle.

1. Remove the seat (see page *17-18*).
2. Disconnect the battery negative (black) lead first.

Caution

To prevent paint damage, do not spill brake fluid onto any area of the bodywork. Spilled brake fluid will damage paintwork.

3. To drain the fluid from the master cylinder, attach a tube to the right hand caliper bleed nipple, slacken the nipple and operate the brake lever until all fluid has been expelled into a suitable container.
4. Remove the right hand switch cube (see page *11-157*).
5. Disconnect the throttle cables (see page *11-156*).
6. Note the setting of the brake lever adjuster to ensure it is returned to the same position when the overhaul operation is complete.

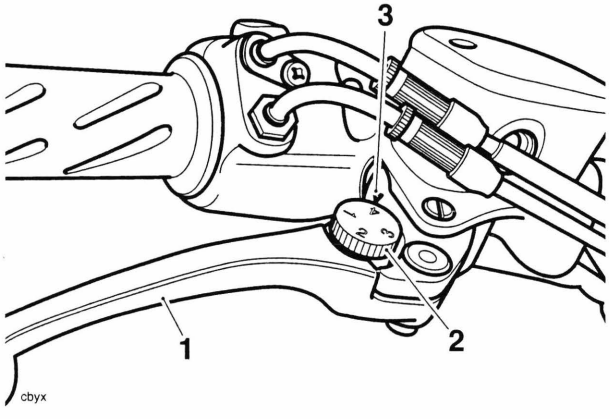

cbyx

1. Lever
2. Adjuster wheel
3. Triangular mark

7. Disconnect the brake hose and brake light switch connections to the master cylinder.
8. Release the clamp screws from the handlebar to remove the master cylinder.

Disassembly

1. Remove the pivot locknut and bolt securing the brake lever to the master cylinder. Remove the lever.
2. Detach the dust cover from the lever end of the cylinder.



cbzi

1. Dust cover

3. Remove the circlip from beneath the dust cover.

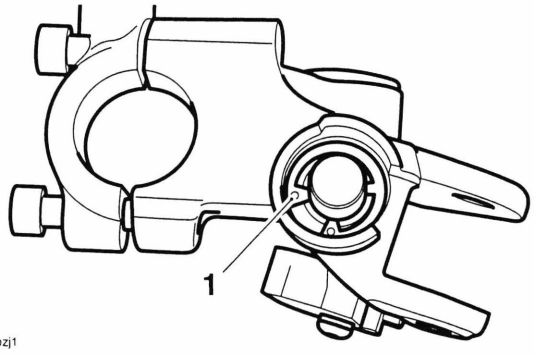

cbzj1

1. Circlip

4. Remove the piston set from the master cylinder bore noting the relative position of the seals and piston components.

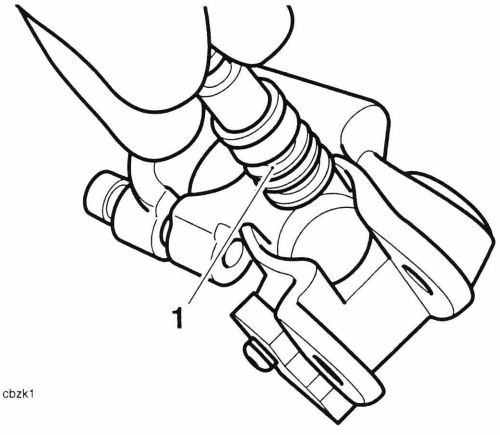

cbzk1

1. Piston Set

Inspection

1. Check the following for wear, damage, cracks or deterioration:

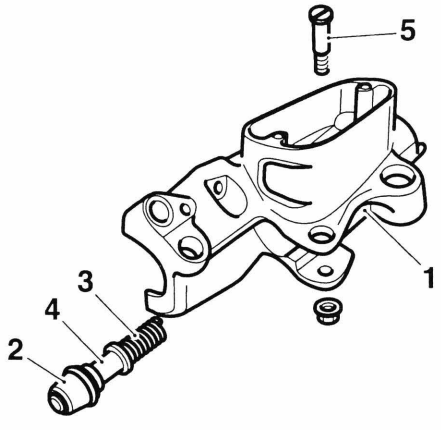

cbzl

1. Cylinder bore
2. Dust cover
3. Spring
4. Piston
5. Pivot Bolt

Note:

- **Always renew the piston and seal set if the cylinder is dismantled.**

2. Check that the relief and supply ports on the cylinder are not blocked.

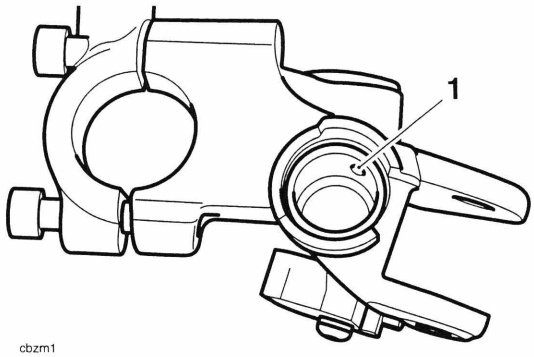

cbzm1

1. Ports

Assembly

Warning

Never use mineral based grease in any part of the braking system or in any area where contact with the braking system is possible. Mineral based grease will damage the hydraulic seals in the calipers and master cylinders. A dangerous riding condition leading to loss of motorcycle control and an accident could result if this warning is ignored.

1. Lubricate the piston and cylinder with new, clean brake fluid.

Warning

Ensure that the piston and piston seal are fitted facing the same way as noted during removal. A dangerous riding condition leading to loss of motorcycle control and an accident could result from incorrect assembly of the master cylinder.

2. Fit the new piston set into the master cylinder and retain with a new circlip.

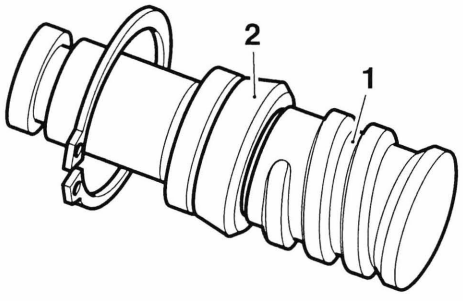

cbzn

1. Piston
2. Seal (in correct orientation)

3. Refit the master cylinder dust cover.

Installation

1. Locate the master cylinder to the handlebars.
2. Position the clamp to the rear side of the handlebars.
3. Align the master cylinder/clamp split line with the dot mark on the underside of the handlebar.

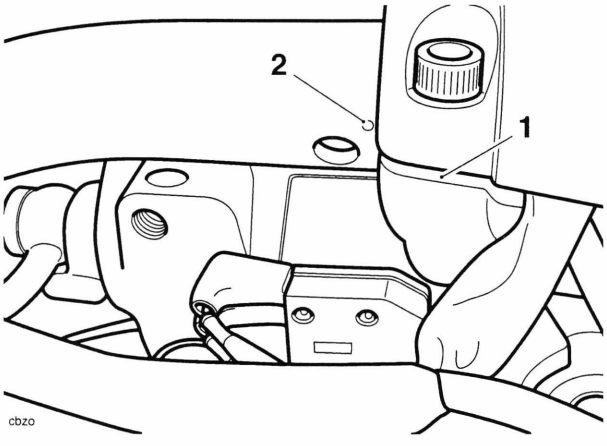

cbzo

1. Split line
2. Dot mark

4. Tighten the clamp bolts, upper first and then the lower to **15 Nm**.
5. Connect the brake light switch.

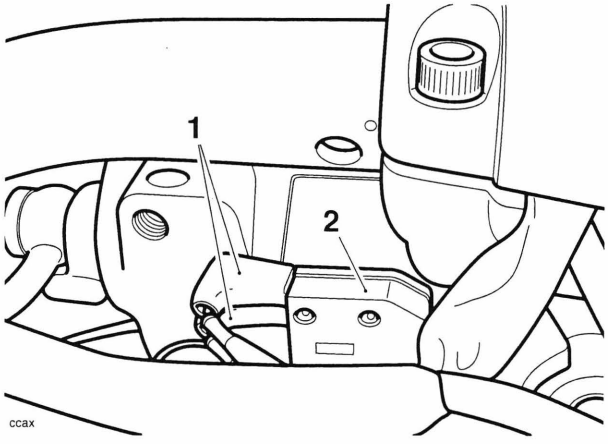

ccax

1. Brake light switch connections
2. Brake light switch

6. Position the brake lever ensuring that the pivot boss is correctly aligned to the push rod.
7. Fit and tighten the pivot bolt to **1 Nm**, and the locknut to **6 Nm**.
8. Connect the brake hose to the master cylinder incorporating new sealing washers to each side of the union. Tighten the union bolt to **25 Nm**.

⚠ Warning

Use only DOT 4 specification brake fluid as listed in the General Information section of this manual. The use of brake fluids other than those DOT 4 fluids listed in the General Information section may reduce the efficiency of the braking system leading to loss of motorcycle control and an accident.

Observe the brake fluid handling warnings given earlier in this section of the manual.

⚠ Caution

To prevent body damage, do not spill brake fluid onto any area of the bodywork. Spilled brake fluid will damage paintwork.

9. Reconnect and adjust the throttle cables (see page *11-159*).
10. Refit the right hand switch cube. Tighten the screws to **2.5 Nm**.
11. Fill and bleed the front brakes (see page *15-17*).

Warning

Always return the lever adjuster to the original setting noted during removal. Operating the motorcycle with lever settings that are unfamiliar may lead to loss of control or an accident.

12. Reset the brake lever adjuster to the original setting.
13. Examine the system for correct operation and fluid leaks. Rectify as necessary.
14. Check the operation of the front brake. Rectify as necessary.

Warning

It is dangerous to operate the motorcycle with defective brakes and you must have your authorised Triumph dealer take remedial action before you attempt to ride the motorcycle again. Failure to take remedial action may reduce braking efficiency leading to loss of motorcycle control and an accident.

15. Connect the battery, positive (red) lead first, and refit the seat.

Front Brake Master Cylinder - Rocket III Touring

Removal

Warning

Before starting work, ensure the motorcycle is stabilised and adequately supported. This will help prevent it from falling and causing injury to the operator or damage to the motorcycle.

1. Remove the seat (see page *17-19*).
2. Disconnect the battery negative (black) lead first.

Caution

To prevent paint damage, do not spill brake fluid onto any area of the bodywork. Spilled brake fluid will damage paintwork.

3. To drain the fluid from the master cylinder, attach a tube to the right hand caliper bleed nipple, slacken the nipple and operate the brake lever until all fluid has been expelled into a suitable container.
4. Disconnect the brake hose and brake light switch connections to the master cylinder.

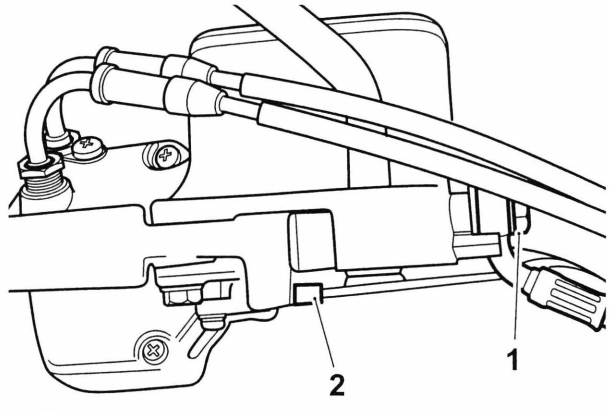

cers

1. Brake hose connection
2. Brake light switch connection

5. Release the clamp screws from the handlebar to remove the master cylinder.

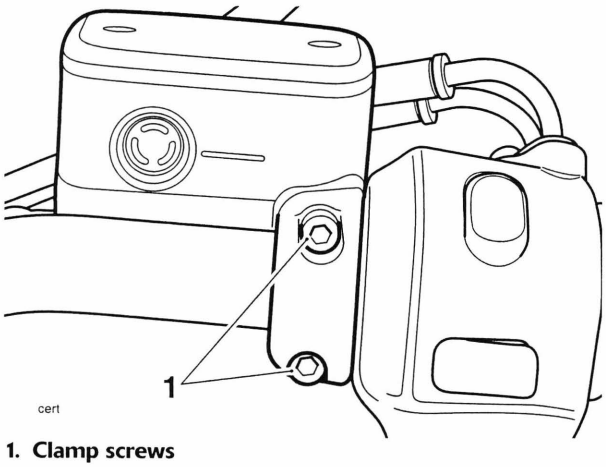

1. Clamp screws

Disassembly

1. Remove the pivot locknut and bolt securing the brake lever to the master cylinder.
2. Remove the brake lever and spring.

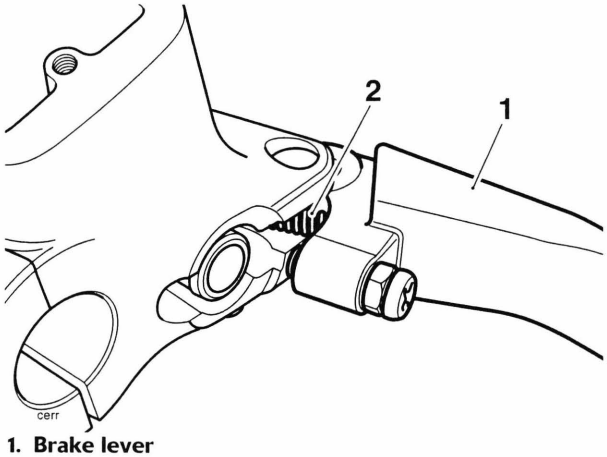

1. Brake lever
2. Spring

3. Detach the dust cover from the lever end of the cylinder.

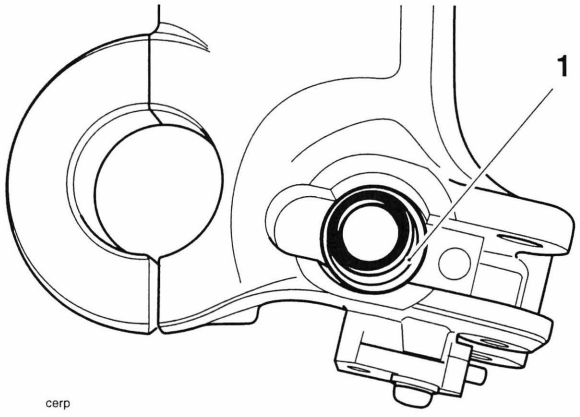

1. Dust cover

4. Remove the circlip from beneath the dust cover.

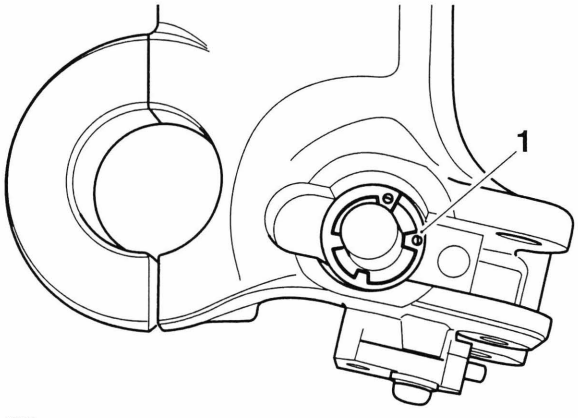

1. Circlip

5. Remove the piston set from the master cylinder bore noting the relative position of the seals and piston components.

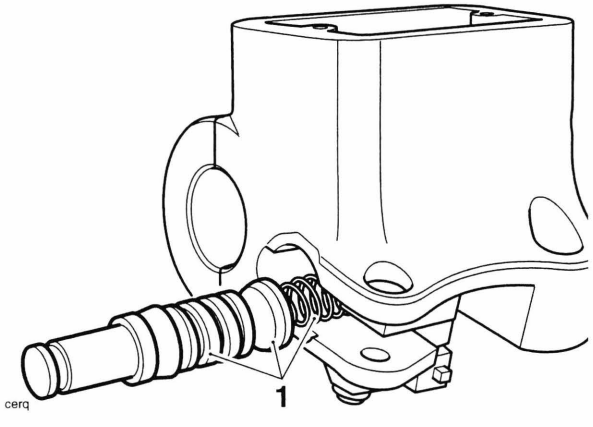

1. Piston Set

Inspection

1. Check the following for wear, damage, cracks or deterioration:

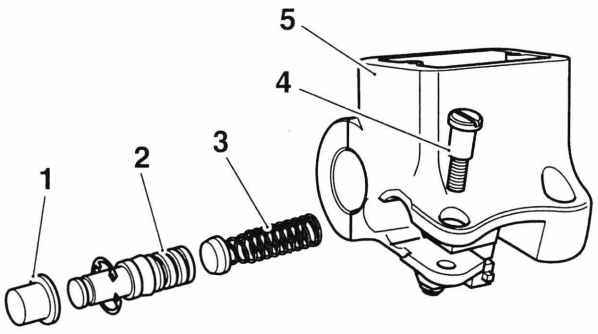

ceru

1. Pivot Bolt
2. Dust cover
3. Piston
4. Spring
5. Cylinder bore

Note:

- **Always renew the piston and seal set if the cylinder is dismantled.**

2. Check that the relief and supply ports on the cylinder are not blocked.

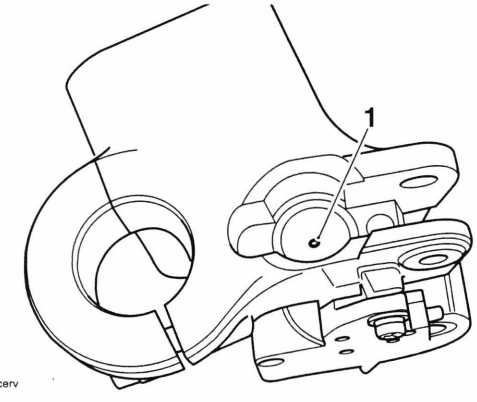

cerv

1. Ports

Assembly

Warning

Never use mineral based grease in any part of the braking system or in any area where contact with the braking system is possible. Mineral based grease will damage the hydraulic seals in the calipers and master cylinders. A dangerous riding condition leading to loss of motorcycle control and an accident could result if this warning is ignored.

1. Lubricate the piston and cylinder with new, clean brake fluid.

Warning

Ensure that the piston and piston seal are fitted facing the same way as noted during removal. A dangerous riding condition leading to loss of motorcycle control and an accident could result from incorrect assembly of the master cylinder.

2. Fit the new piston set into the master cylinder and retain with a new circlip.

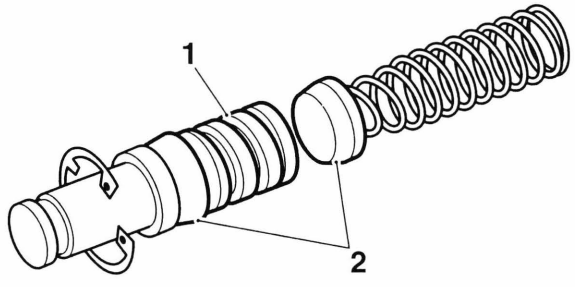

ceqw

1. Piston
2. Seals (in correct orientation)

3. Refit the master cylinder dust cover.

Installation

1. Locate the master cylinder to the handlebars.
2. Position the clamp to the rear side of the handlebars.
3. Align the master cylinder/clamp split line with the dot mark on the upperside of the handlebar.

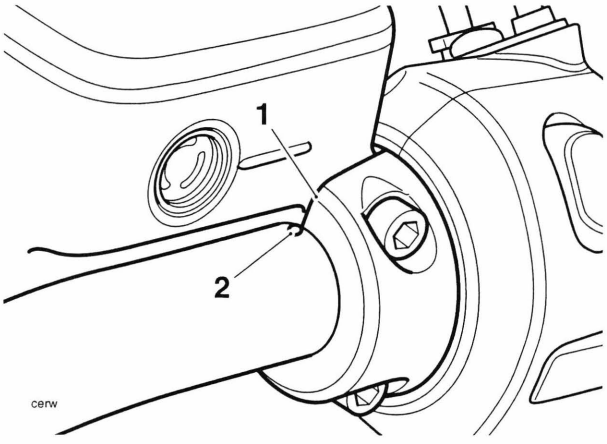

1. Dot mark
2. Split line

4. Tighten the clamp bolts, upper first and then the lower to **12 Nm**.
5. Connect the brake light switch.
6. Position the brake lever and spring ensuring that the pivot boss is correctly aligned to the push rod.
7. Fit and tighten the pivot bolt to **3 Nm**, and the locknut to **6 Nm**.
8. Connect the brake hose to the master cylinder incorporating new sealing washers to each side of the union. Tighten the union bolt to **25 Nm**.

⚠ Warning

Use only D.O.T. 4 specification brake fluid as listed in the general information section of this manual. The use of brake fluids other than those D.O.T. 4 fluids listed in the general information section may reduce the efficiency of the braking system leading to loss of motorcycle control and an accident.

Observe the brake fluid handling warnings given earlier in this section of the manual.

⚠ Caution

To prevent body damage, do not spill brake fluid onto any area of the bodywork. Spilled brake fluid will damage paintwork.

9. Fill and bleed the front brakes (see page *15-17*).
10. Examine the system for correct operation and fluid leaks. Rectify as necessary.
11. Check the operation of the front brake. Rectify as necessary.

⚠ Warning

It is dangerous to operate the motorcycle with defective brakes and you must have your authorised Triumph dealer take remedial action before you attempt to ride the motorcycle again. Failure to take remedial action may reduce braking efficiency leading to loss of motorcycle control and an accident.

12. Connect the battery, positive (red) lead first, and refit the seat.

Bleeding the Rear Brakes, Renewing Brake Fluid

Note:

- **Models with ABS brakes: Refer to bleeding ABS brakes later in this section (see page *15-48*).**

Warning

Before starting work, ensure the motorcycle is stabilised and adequately supported. This will help prevent it from falling and causing injury to the operator or damage to the motorcycle.

1. **Rocket III Touring only:** Remove the right hand pannier only (see page *17-22*).
2. **All models:** Remove the cap from the rear bleed nipple.
3. Attach a transparent tube to the bleed nipple.

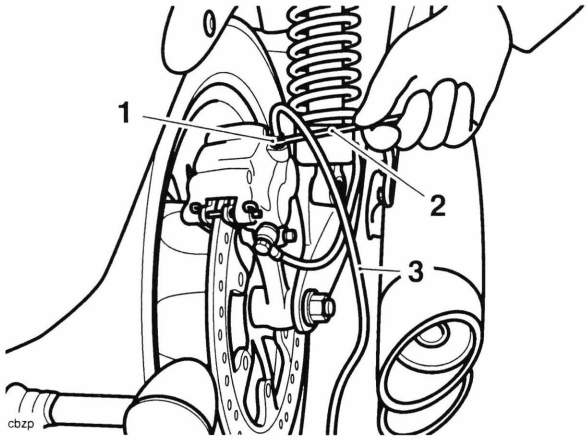

1. Bleed nipple
2. Spanner
3. Bleed tube

4. Place the other end of the tube in a suitable receptacle containing new brake fluid.

Caution

To prevent paint damage, do not spill brake fluid onto any area of the bodywork. Spilled brake fluid will damage paintwork.

5. Remove the master cylinder heel guard.

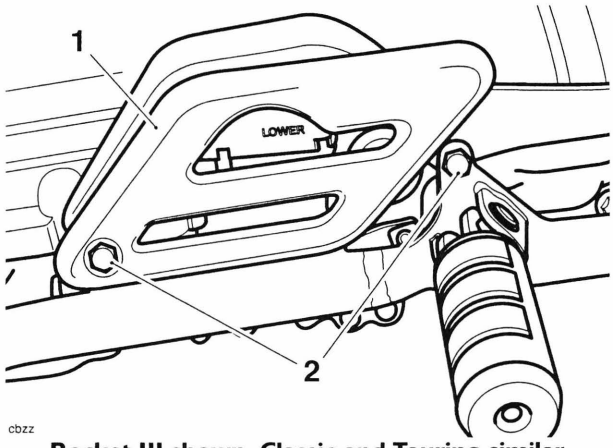

Rocket III shown, Classic and Touring similar

1. Heel guard
2. Heel guard fixings

6. Remove the screws and remove the rear brake reservoir cap taking care not to spill any fluid.

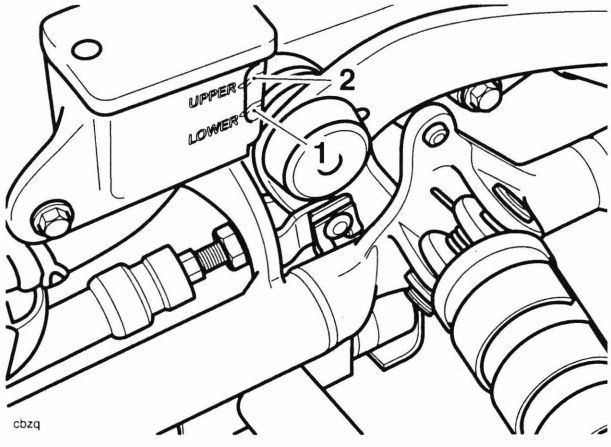

1. Rear reservoir lower level
2. Rear reservoir upper level

Warning

Ensure absolute cleanliness when adding brake fluid to the brake fluid reservoir. Do not allow moisture or debris to enter the cylinder, as this will adversely affect the fluid properties. Always use fluid from a sealed container and do not use fluid from a container that has been opened for any period of time. Always check for fluid leakage around hydraulic fittings and for damage to hoses. A dangerous riding condition leading to loss of motorcycle control and an accident could result if this warning is ignored.

Caution

To prevent paint damage, do not spill brake fluid onto any area of the bodywork. Spilled brake fluid will damage paintwork.

7. Check the condition of the sealing diaphragm. Replace the diaphragm as necessary.

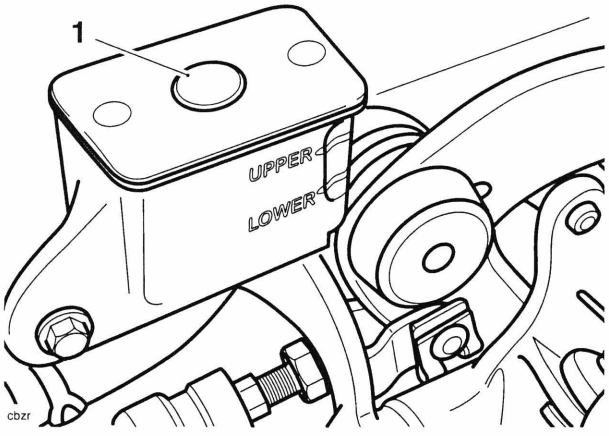

1. Diaphragm

8. Release the bleed nipple.

Note:

- **During bleeding, do not allow the fluid level to fall below the lower level mark in the reservoir. If the level is allowed to fall below this mark, air may enter the system and the sequence of bleeding must be repeated.**

9. Slowly depress the brake pedal and, holding the pedal fully down, close the bleed nipple. Repeat steps 7 and 8 until no more air appears in the bleed tube, maintaining the brake fluid level between the upper and lower reservoir levels whilst bleeding is being carried out.
10. When all air has been expelled from the system, hold down the brake pedal and close the bleed nipple. Tighten the nipple to **8 Nm**.
11. Fill the reservoir to the maximum level with new DOT 4 fluid.

Warning

Use only D.O.T. 4 specification brake fluid as listed in the general information section of this manual. The use of brake fluids other than those D.O.T. 4 fluids listed in the general information section may reduce the efficiency of the braking system leading to loss of motorcycle control and an accident. Observe the brake fluid handling warnings given earlier in this section of the manual.

Caution

To prevent paint damage, do not spill brake fluid onto any area of the bodywork. Spilled brake fluid will damage paintwork.

12. Fit the reservoir cover and diaphragm. Check for correct diaphragm fitment before tightening the cover fixings to **3 Nm**.
13. Refit the master cylinder heel guard. Tighten the fixings to **18 Nm.**
14. Remove the bleed tube from the nipple.
15. Replace the bleed nipple dust cap.
16. Ensure the brake pedal operation has a firm resistive feel to it, does not feel spongy and that the pedal cannot be depressed through its full range of travel. Rectify as necessary.
17. Check the operation of the rear brake. Rectify as necessary.

Warning

It is dangerous to operate the motorcycle with defective brakes and you must have your authorised Triumph dealer take remedial action before you attempt to ride the motorcycle again. Failure to take remedial action may reduce braking efficiency leading to loss of motorcycle control and an accident.

Rear Brake Pads, Rear Brake Caliper

Removal

Warning

Before starting work, ensure the motorcycle is stabilised and adequately supported. This will help prevent it from falling and causing injury to the operator or damage to the motorcycle.

18. Raise and support the rear of the motorcycle.
19. **Rocket III Touring only:** Remove both of the exhaust silencers (see page *11-182*).
20. Release the wheel spindle nut and withdraw the spindle to a point where it clears the caliper carrier.

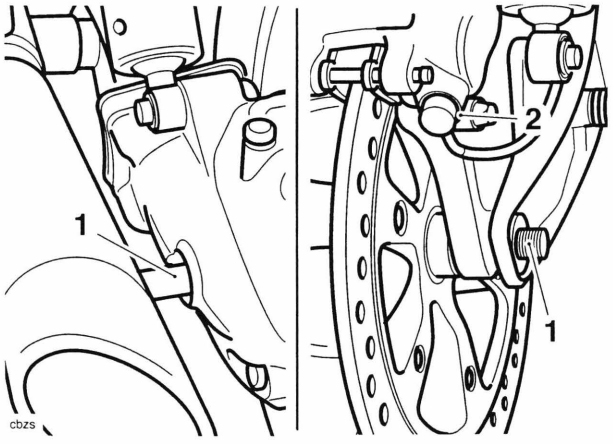

1. Wheel spindle
2. Caliper carrier

21. Release and discard the torque reaction bolt from the caliper carrier, collecting the spacer from between the wheel and caliper carrier.

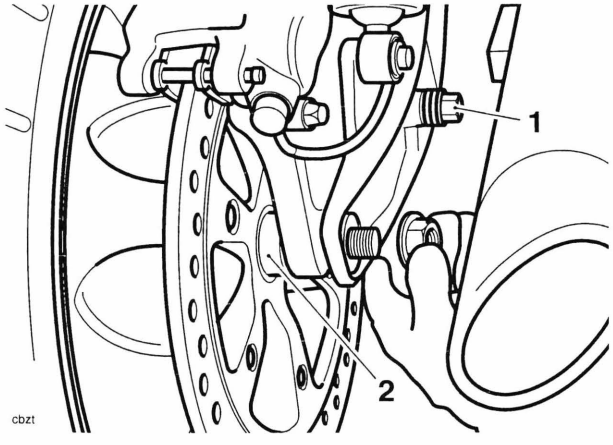

1. Torque reaction bolt
2. Spacer

22. If removing the caliper completely, disconnect the brake hose. Otherwise, leave the hose attached.

Warning

Do not allow the caliper to hang on the brake hose as this may damage the hose and could lead to reduced brake efficiency causing loss of motorcycle control and an accident.

23. As an assembly, manoeuvre the caliper and carrier until it is clear of the brake disc and wheel, collecting the spacer once it is freed from the caliper carrier.

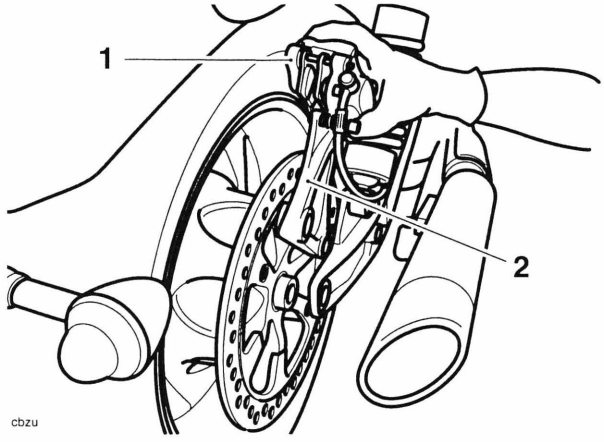

1. Caliper
2. Caliper carrier

24. Remove both 'R' clips from the pad retaining pin, and remove the pin.

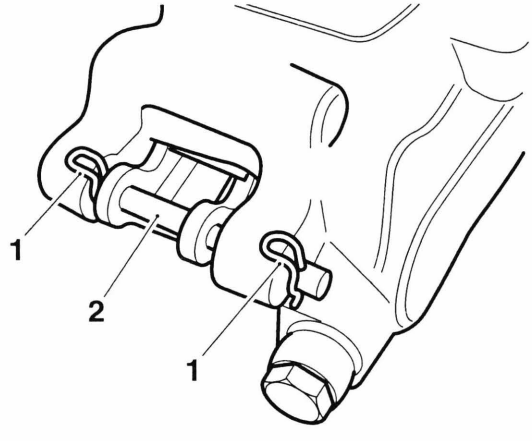

1. 'R' Clips
2. Pad retaining pin

25. Remove the brake pads and inspect for damage or wear beyond the service limit.
26. Remove the anti-rattle spring and inspect for damage.

Installation

Warning

Never use mineral based grease in any part of the braking system or in any area where contact with the braking system is possible. Mineral based grease will damage the hydraulic seals in the calipers and master cylinders. Damage caused by mineral based grease may reduce braking efficiency resulting in loss of motorcycle control and an accident.

Caution

Brake fluid will be displaced as the caliper pistons are compressed. To prevent body damage, ensure that the displaced fluid does not come into contact with any part of the bodywork or the rear wheel.

1. If fitting new pads, use hand pressure to compress the caliper pistons fully into their bores.
2. Install the anti-rattle spring into the caliper.

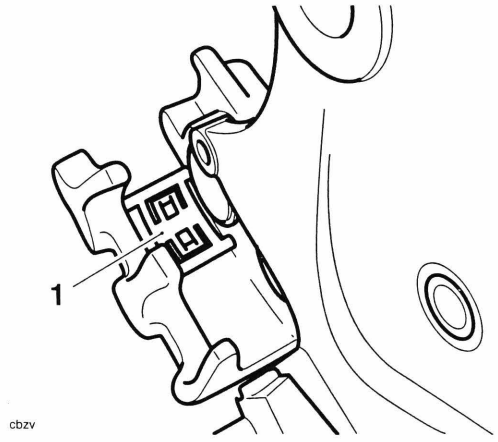

1. Anti rattle spring

3. Renew the brake pads as a pair or, if both pads are in a serviceable condition, clean the pad grooves before fitting them.

Warning

Do not apply more than a minimum coating of grease to the pad retaining pins. Excess grease may contaminate the brake pads, hydraulic seals and discs causing reduced braking efficiency and an accident.

4. Lubricate the pad retaining pin using a minimum amount of proprietary high temperature brake grease. Refit the pin and retain with both 'R' clips.
5. Position the spacer between the wheel hub and caliper carrier.

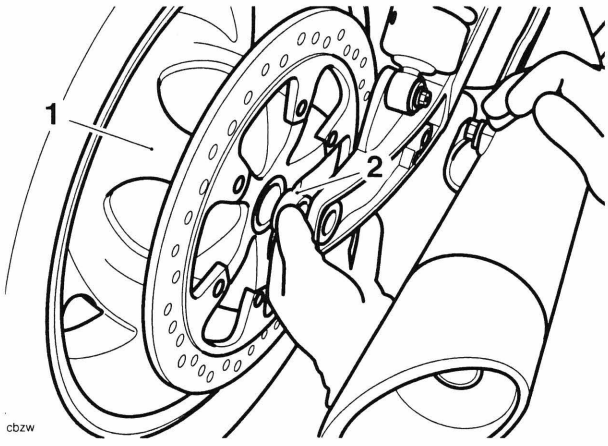

1. Wheel hub
2. Spacer

6. Position the caliper and carrier over the disc ensuring both pads are correctly aligned on either side of the disc.
7. Align the caliper carrier with the wheel spindle, spacer and swinging arm. Once in alignment, push the wheel spindle through the spacer and caliper carrier.
8. Align the caliper carrier to the torque reaction fixing point. Once in alignment, fit a new torque reaction bolt.
9. Tighten the wheel spindle nut to **110 Nm** and the torque reaction bolt to **69 Nm**.

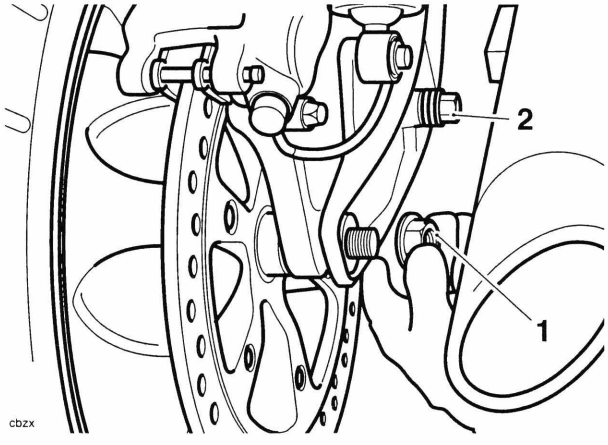

1. Wheel spindle nut
2. Torque reaction bolt

10. If previously disconnected, incorporating new washers to each side of the union, fit and tighten the brake union bolt to **25 Nm**.
11. If the brake hose has been disconnected, bleed the rear brake (see page *15-34*).
12. Pump the brake pedal to correctly position the caliper pistons.

Warning

Use only DOT 4 specification brake fluid as listed in the general information section of this manual. The use of brake fluids other than those DOT 4 fluids listed in the general information section may reduce the efficiency of the braking system leading to loss of motorcycle control and an accident.

Observe the brake fluid handling warnings given earlier in this section of the manual.

13. Check the brake fluid level and top-up as required with new DOT 4 fluid.
14. Check the operation of the rear brake. Rectify as necessary.
15. **Rocket III Touring only:** Refit the exhaust silencers (see page *11-185*).

Warning

It is dangerous to operate the motorcycle with defective brakes and you must have your authorised Triumph dealer take remedial action before you attempt to ride the motorcycle again. Failure to take remedial action may reduce braking efficiency leading to loss of motorcycle control and an accident.

Rear Brake Caliper

Removal

Warning

Before starting work, ensure the motorcycle is stabilised and adequately supported. This will help prevent it from falling and causing injury to the operator or damage to the motorcycle.

Caution

To prevent paint damage, do not spill brake fluid onto any area of the bodywork. Spilled brake fluid will damage the paintwork.

Rocket III Touring

1. Remove both of the exhaust silencers, as described in the service manual.

All Models

1. Disconnect the brake hose at the caliper and place the free end of the hose in a suitable container to collect any displaced brake fluid.
2. Remove the brake caliper, brake pads and anti-rattle spring, as described in the service manual.

Disassembly

Warning

To prevent injury, never place fingers or hands inside the caliper opening when removing the piston. Always wear eye, hand and face protection when using compressed air. Eye, face and skin damage will result from direct contact with compressed air.

Warning

Always renew caliper seals after the pistons have been removed from the caliper. An effective hydraulic seal can only be made if new components are used.

A dangerous riding condition leading to loss of motorcycle control and an accident could result if this warning is ignored.

1. Cover the caliper opening with a clean, heavy cloth and, using either compressed air or by reconnecting the brake hose to the caliper and pumping the brake lever, remove the pistons.

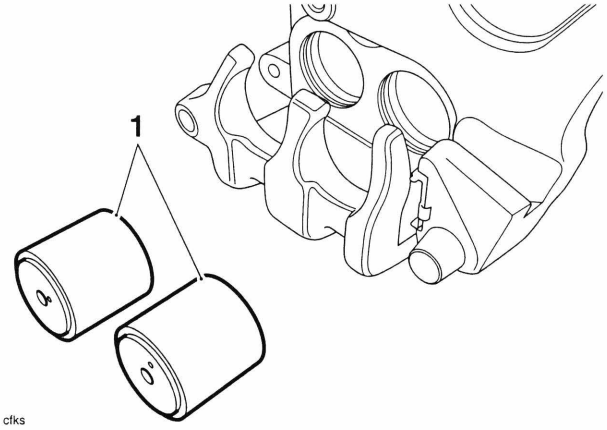

cfks

1. Caliper pistons

Warning

Ensure the seal grooves in the caliper bores are not damaged during the removal of the seals. Damage to the seal grooves may allow brake fluid to leak past the seals resulting in a dangerous riding condition leading to loss of motorcycle control and an accident.

Note:

- **The dust seal has a lip, note the orientation of the seal lip prior to removal.**

2. Remove the old seals then thoroughly clean and dry the caliper bores and pistons. Discard the old seals, these must not be reused.

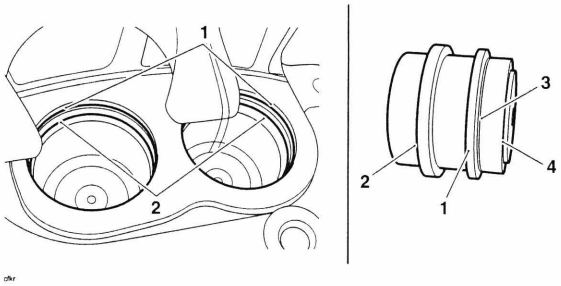

cfkr

1. Dust seals
2. Piston seals
3. Dust seal lip (shown on piston for clarity)
4. Caliper piston

3. Check the piston and caliper bore for corrosion, scoring and damage. Renew as necessary.

Assembly

Warning

Never use mineral based grease in any part of the braking system or in any area where contact with the braking system is possible. Mineral based grease will damage the seals in the calipers and master cylinders.

A dangerous riding condition leading to an accident could result if this warning is ignored.

Warning

Ensure that the caliper bores do not become scratched during removal and assembly.

A dangerous riding condition leading to an accident could result if this warning is ignored.

Warning

Before installation, all internal brake components should be cleaned and lubricated with clean new DOT 4 brake fluid.

Never use solvents, petrol (gasoline), engine oil, or any other petroleum distillate on internal brake components as this will cause deterioration of the hydraulic seals in the calipers and master cylinders.

A dangerous riding condition leading to loss of motorcycle control and an accident could result if this warning is ignored.

1. Fit new piston seals to the caliper.
2. Fit new dust seals as noted prior to removal.

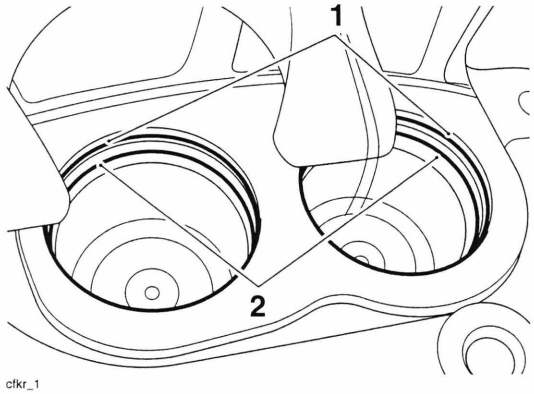

cfkr_1

1. Dust seals
2. Piston seals

3. Apply new brake fluid to the outside of the caliper pistons and seals.

Warning

Ensure that the piston does not tip during assembly as this could damage the caliper.

A dangerous riding condition leading to loss of motorcycle control and an accident could result if this warning is ignored.

4. Carefully push the piston into the caliper by hand.
5. Fit the anti-rattle spring, brake pads and brake caliper, as described in the service manual.
6. Connect the brake hose to the caliper incorporating new washers on each side of the banjo bolt. Tighten the banjo bolt to **25 Nm**.
7. Bleed the rear brake, as described in the service manual.
8. Check for correct brake operation. Rectify as necessary.

Warning

It is dangerous to operate the motorcycle with defective brakes and you must have your authorised Triumph dealer take remedial action before you attempt to ride the motorcycle again. Failure to take remedial action may reduce braking efficiency leading to loss of motorcycle control and an accident.

Rear Brake Disc

Wear

Warning

Before starting work, ensure the motorcycle is stabilised and adequately supported. This will help prevent it from falling and causing injury to the operator or damage to the motorcycle.

1. Replace any brake disc if worn beyond the service limit or exceeds the disc run-out limit.

Rear Disc Thickness	
Standard	7.5 mm
Service limit	6.5 mm

Disc Run-out	
Service limit	0.15 mm

Measure disc run-out using an accurate dial gauge mounted on a surface plate.

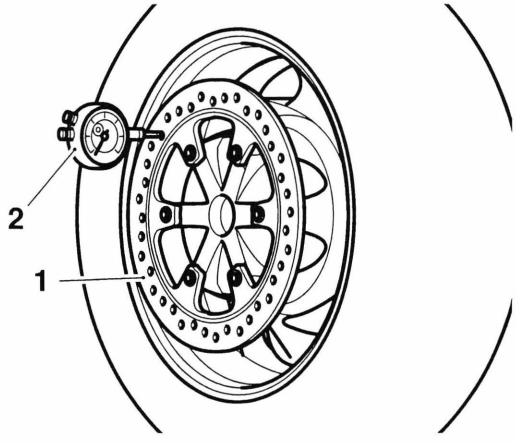

cbzy

1. Disc
2. Dial gauge

Removal

Warning

Before starting work, ensure the motorcycle is stabilised and adequately supported. This will help prevent it from falling and causing injury to the operator or damage to the motorcycle.

1. Remove the rear wheel (see page *16-10* for Rocket III and Classic, see page *16-15* for Rocket III Touring).
2. Support the wheel on blocks to avoid damage to the wheel centre.
3. Remove and discard the disc securing bolts. Detach the disc.

Installation

1. Locate the disc to the wheel.
2. Fit new securing bolts and tighten to **22 Nm**.
3. Refit the rear wheel (see page *16-11* for Rocket III and Classic, see page *16-17* for Rocket III Touring).
4. Check the operation of the rear brake. Rectify as necessary.

Warning

It is dangerous to operate the motorcycle with defective brakes and you must have your authorised Triumph dealer take remedial action before you attempt to ride the motorcycle again. Failure to take remedial action may reduce braking efficiency leading to loss of motorcycle control and an accident.

Rear Master Cylinder

Removal

Warning

Before starting work, ensure the motorcycle is stabilised and adequately supported. This will help prevent it from falling and causing injury to the operator or damage to the motorcycle.

1. Remove the seat (see page *17-18* for Rocket III and Classic, see page *17-19* for Rocket III Touring).
2. Disconnect the battery, negative (black) lead first.

Caution

To prevent paint damage, do not spill brake fluid onto any area of the bodywork. Spilled brake fluid will damage paintwork.

3. Drain the fluid from the master cylinder by bleeding the system at the rear caliper until all fluid has been expelled.
4. Remove the master cylinder heel guard.

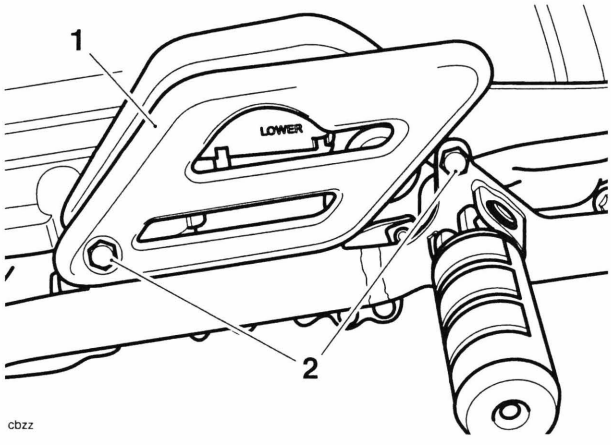

Rocket III shown, Rocket III Classic and Touring have footboards

1. Heel guard
2. Heel guard fixings

5. Remove the clip from the brake pedal clevis pin. Remove the clevis pin.

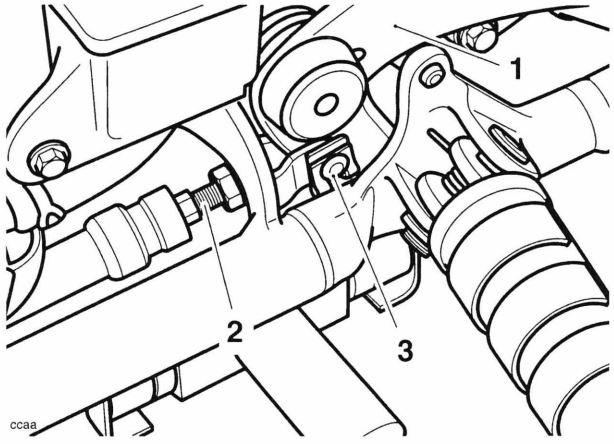

1. Pedal
2. Pushrod
3. Clevis pin

6. Disconnect the feed hose from the brake fluid reservoir at the master cylinder.

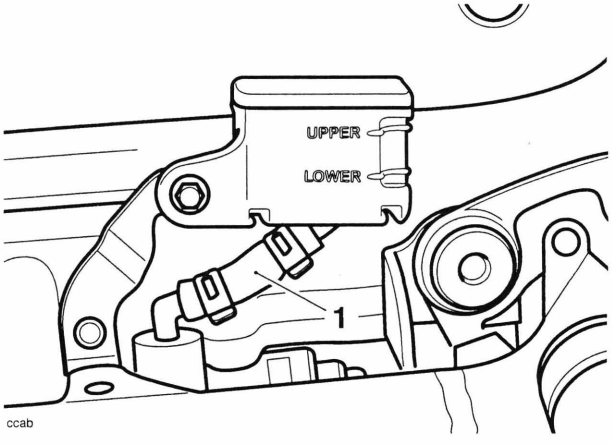

1. Reservoir feed hose

7. Disconnect the brake pipe from the master cylinder (discard the sealing washers).

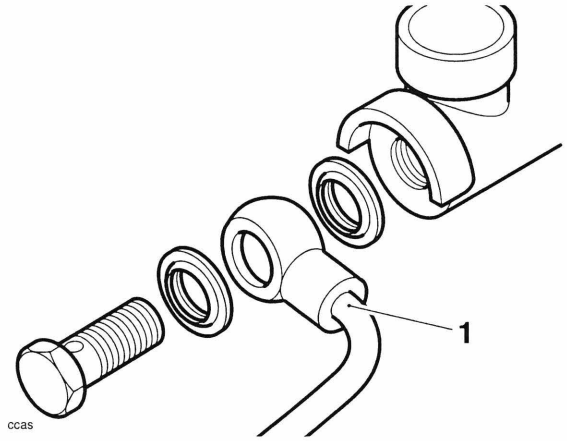

ccas

1. Brake pipe

8. Release the bolts securing the master cylinder to the footrest mounting bar. Detach the master cylinder.

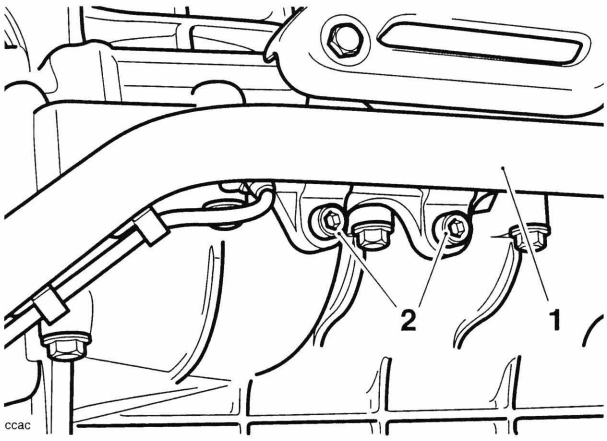

ccac

1. Footrest mounting bar
2. Master cylinder bolts

Disassembly

1. Remove the dust cover from the cylinder and pushrod.
2. Remove the circlip retaining the pushrod to the cylinder.

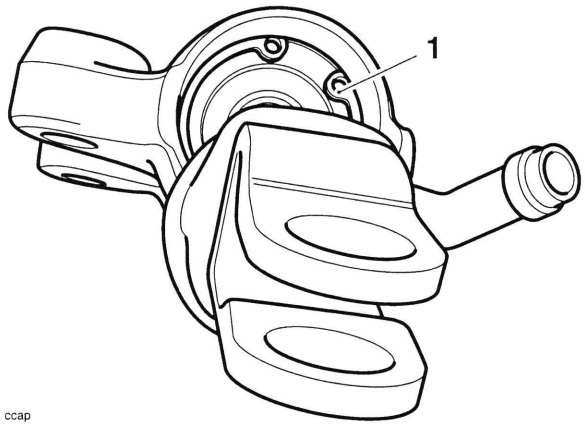

ccap

1. Circlip

3. Remove the pushrod and piston set from the master cylinder bore noting the relative position of the seals and piston components.

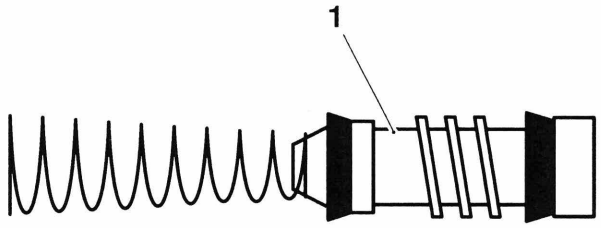

ccaq

1. Piston

Inspection

1. Check the following for wear, damage, cracks or deterioration:

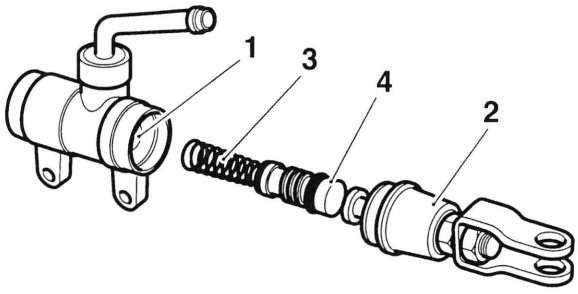

ccad

1. Cylinder bore
2. Dust cover
3. Spring
4. Piston

2. Examine the pushrod for distortion and other damage. Replace as necessary.

Assembly

Warning

Never use mineral based grease in any part of the braking system or in any area where contact with the braking system is possible. Mineral based grease will damage the hydraulic seals in the calipers and master cylinders. A dangerous riding condition leading to loss of motorcycle control and an accident could result from use of mineral grease.

1. Lubricate the piston and cylinder with new, clean brake fluid.

Warning

Ensure that the piston and piston seal are fitted facing the same way as noted during removal. A dangerous riding condition leading to loss of motorcycle control and an accident could result from incorrect assembly of the master cylinder.

2. Fit the new piston and seal set into the master cylinder.

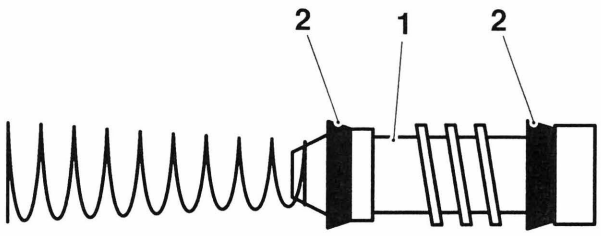

ccao

1. Piston
2. Seals (in correct orientation)

3. Apply a small amount of brake grease to the pushrod.
4. Install the pushrod in the master cylinder, compress the spring and retain the assembly with a new circlip.

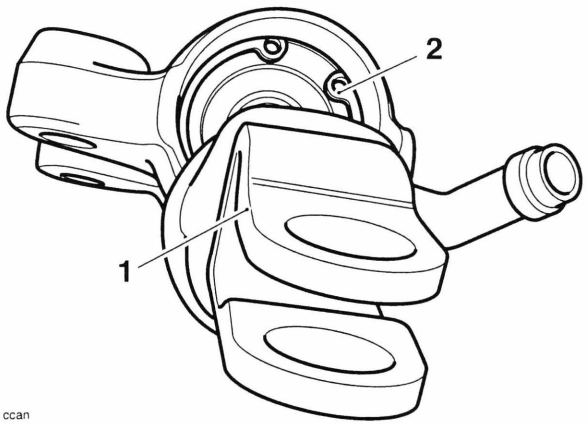

ccan

1. Pushrod
2. Circlip

5. Refit the master cylinder boot.

Installation

1. Position the master cylinder to the footrest mounting bar.
2. Secure with two new bolts, tightening to **27 Nm**.
3. Incorporating new washers to either side of the union, fit the brake pipe. Tighten the union bolt to **25 Nm**.
4. Position the reservoir hose to the master cylinder. Retain the hose by positioning the clips as shown below.

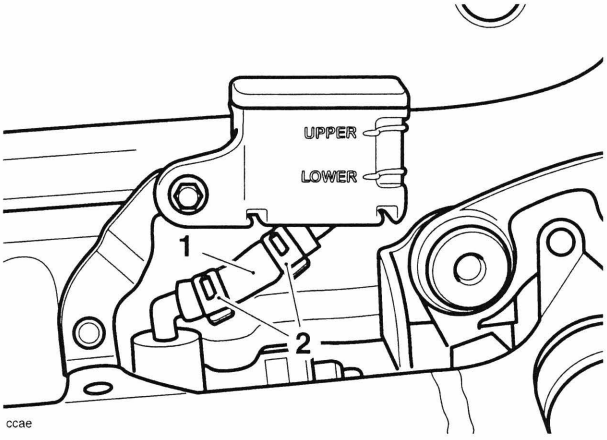

1. Reservoir hose
2. Clips

5. Align the brake pedal with the pushrod, engage the clevis and retain it with the clip. Ensure the clip is fitted as shown below.

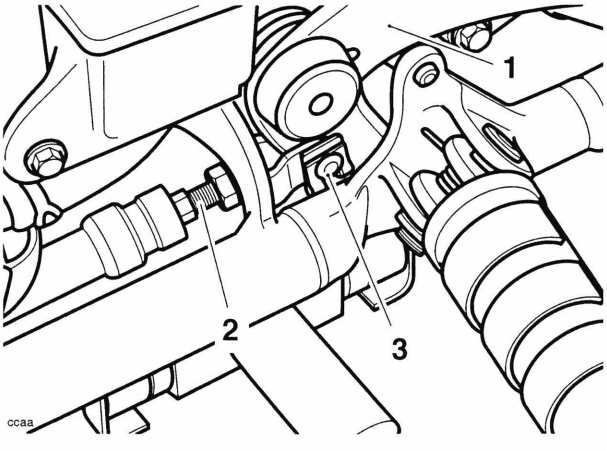

1. Pedal
2. Pushrod
3. Clevis pin

Warning

Use only DOT 4 specification brake fluid as listed in the general information section of this manual. The use of brake fluids other than those DOT 4 fluids listed in the general information section may reduce the efficiency of the braking system leading to loss of motorcycle control and an accident. Observe the brake fluid handling warnings given earlier in this section of the manual.

6. Refit the heel guard tightening the fixings to **18 Nm**.

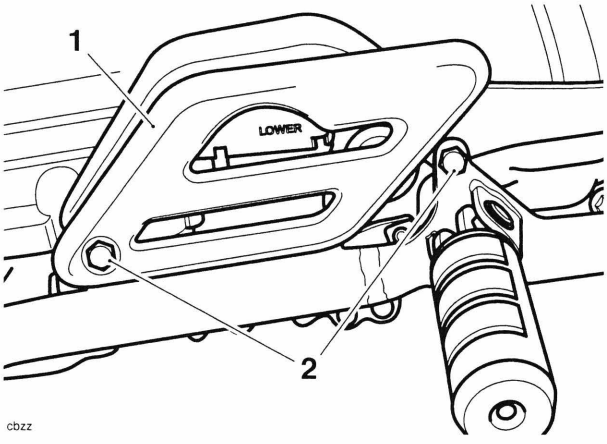

1. Heel guard
2. Fixings

7. Fill and bleed the rear brake system (see page *15-34*).
8. Reconnect the battery, positive (red) lead first.
9. Refit the seat (see page *17-18*) for Rocket III and Classic, see page *17-19* for Rocket III Touring).
10. Check the operation of the rear brake. Rectify as necessary.

Warning

It is dangerous to operate the motorcycle with defective brakes and you must have your authorised Triumph dealer take remedial action before you attempt to ride the motorcycle again. Failure to take remedial action may reduce braking efficiency leading to loss of motorcycle control and an accident.

Rear Master Cylinder Rocket III Roadster

Removal

Warning

Before starting work, ensure the motorcycle is stabilised and adequately supported. This will help prevent it from falling and causing injury to the operator or damage to the motorcycle.

1. Remove the seat (see page *17-18*).
2. Disconnect the battery, negative (black) lead first.

Warning

To prevent paint damage, do not spill brake fluid onto any area of the bodywork. Spilled brake fluid will damage paintwork.

3. Drain the fluid from the master cylinder by bleeding the system at the rear caliper until the all fluid has been expelled.
4. Remove the master cylinder heel guard.

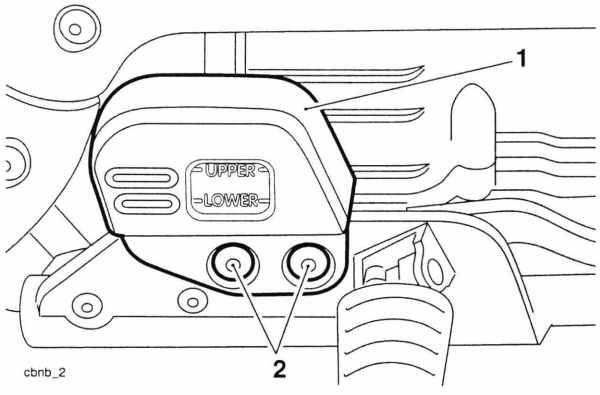

1. Heal guard
2. Fixings

5. Remove the clip from the brake pedal clevis pin (footrest mounting bar removed for clarity).

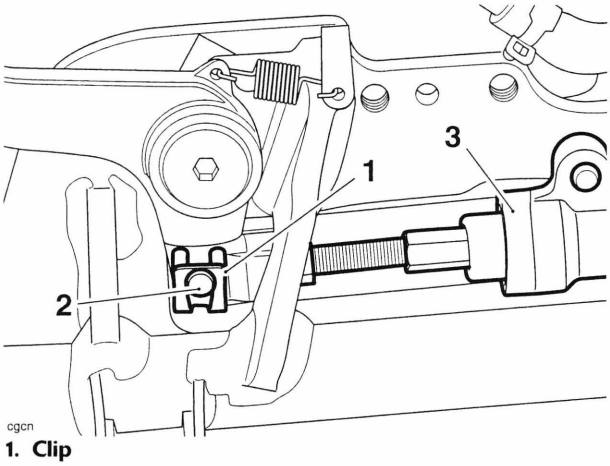

1. Clip
2. Clevis pin
3. Master cylinder

6. Disconnect the brake pipe from the master cylinder (discard the sealing washers).

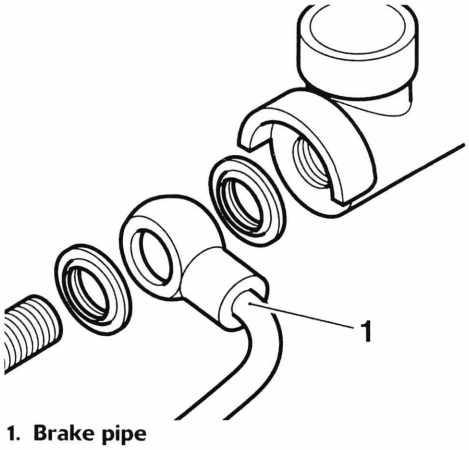

1. Brake pipe

7. Detach the brake fluid reservoir from the master cylinder cover.

8. Release the fixings and remove the master cylinder cover.

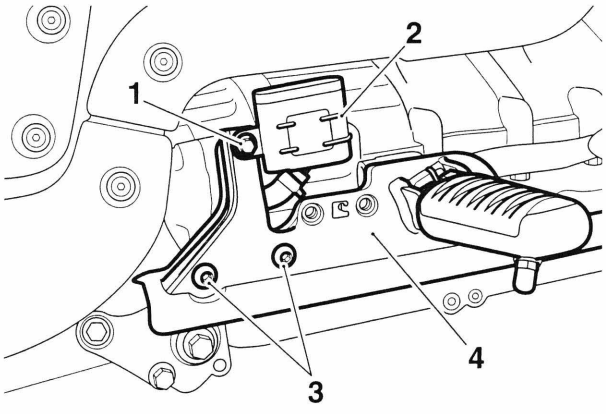

cgcm

1. Reservoir fixing
2. Brake fluid reservoir
3. Cover fixings
4. Cover

9. Remove the clevis pin and the master cylinder.

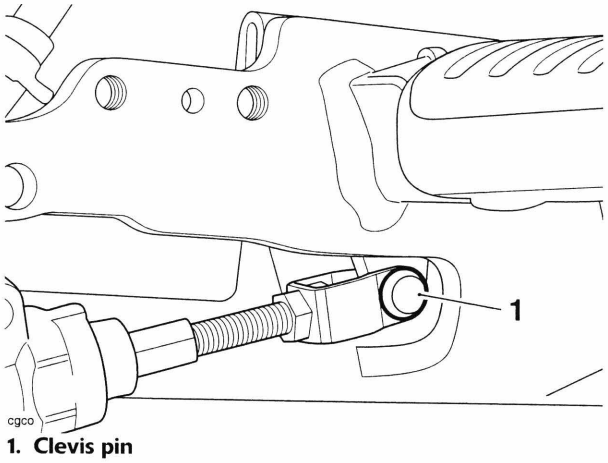

cgco

1. Clevis pin

Installation

1. Align the brake pedal with the push rod and fit the clevis pin.
2. Position the master cylinder and its cover to the footrest mounting bar.
3. Secure with the two fixings and tighten to **16 Nm**.
4. Secure the fluid reservoir to the footrest bar and tighten the fixing to **7 Nm**.
5. Incorporating new washers to either side of the union, fit the brake pipe. Tighten the union bolt to **25 Nm**.
6. Secure the clevis pin with its clip. Ensure the clip is fitted as shown below (footrest mounting bar removed for clarity).

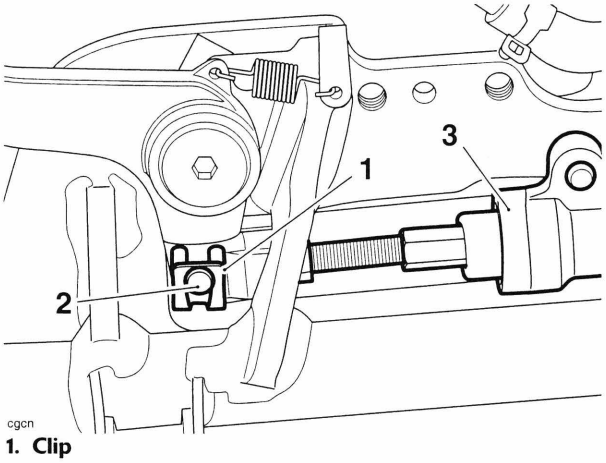

cgcn

1. Clip
2. Clevis pin
3. Master cylinder

Warning

Use only DOT 4 specification brake fluid as listed in the general information section of the service manual. The use of brake fluids other than those DOT 4 fluids listed in the general information section may reduce the efficiency of the braking system leading to loss of control and an accident. Observe the brake fluid handling warnings given in the brakes section of the service manual.

7. Fill and bleed the rear brake system (see page *15-48*).
8. Refit the heel guard, tightening the fixings to **18 Nm**.
9. Reconnect the battery, positive (red) lead first.
10. Refit the seat (see page *17-18*).
11. Check the operation of the rear brake. Rectify as necessary.

Warning

It is dangerous to operate the motorcycle with defective brakes and you must have your authorised Triumph dealer take remedial action before you attempt to ride the motorcycle again. Failure to take remedial action may reduce braking efficiency leading to loss of control and an accident.

Bleeding the Front Brakes, Renewing Brake Fluid - Rocket III Touring - ABS and Rocket III Roadster

Using the Triumph diagnostic tool, it is possible to bleed the ABS modulator of trapped air. This is necessary when the hydraulic brake system has been dismantled, or the ABS modulator renewed.

The following procedure is the method to be used for bleeding the front brakes.

1. Complete the brake bleed procedure as for models without ABS brakes (see page *15-17*) to step 24. Do not remove the bleed tube from the bleed nipple.
2. Connect the Triumph diagnostic tool (see page *15-62*).
3. Follow the on screen menu to ABS Diagnostics. From the menu, select **BLEED SYSTEM** (see page *15-63*).

Note:

- **On pressing the Start button, the diagnostic software will send a command to the ABS ECM to open the 2nd circuit solenoid.**
- **When the ABS modulator 2nd circuit is activated by the bleed command, the front brake lever travel will increase as the ABS modulator solenoids are opened and will then decrease as the solenoids are automatically closed.**
- **Pressure must be applied to the front brake lever before operating the bleed sequence on the diagnostic tool. An assistant will be required to open the bleed nipple while pressure is applied to the brake lever.**

4. Apply pressure to the front brake lever, press the **Start** button to activate the bleed sequence on the diagnostic tool, and with assistance, release one of the bleed nipples.
5. Get an assistant to slowly pull the brake lever to the handlebar.
6. With the lever held fully against the handlebar, close the bleed nipple. Once the bleed nipple is closed, release the brake lever.

7. Repeat steps 5 and 6 until no more air appears in the bleed tube, maintaining the brake fluid level between the upper and lower reservoir levels whilst bleeding is being carried out.
8. The bleed sequence will run for a maximum of 90 seconds. Press the **Stop** button to end the bleed sequence at any time. Once the bleed sequence has completed, the diagnostic tool will display a message **ABS system bleed complete**.

Caution

The ABS module must be allowed to cool between bleeding operations. Always allow the ABS module to cool for 5 minutes before starting the bleed procedure again. Failure to follow this instruction may result in damage to the ABS module.

9. Repeat the above procedure as necessary until all air is expelled from the system.
10. When all air has been expelled from the system, apply pressure to the brake lever and close the bleed nipple. Tighten the nipple to **6 Nm**.
11. Repeat the complete brake bleed procedure as for models without ABS brakes (see page *15-17*).

Front ABS Wheel Speed Sensor- Rocket III Touring - ABS and Rocket III Roadster

Removal

1. Remove the rider's seat (see page *17-19*).
2. Disconnect the battery, negative (black) lead first.
3. Raise and prop the fuel tank (see page *11-121*).
4. Remove the left hand headstock cover.

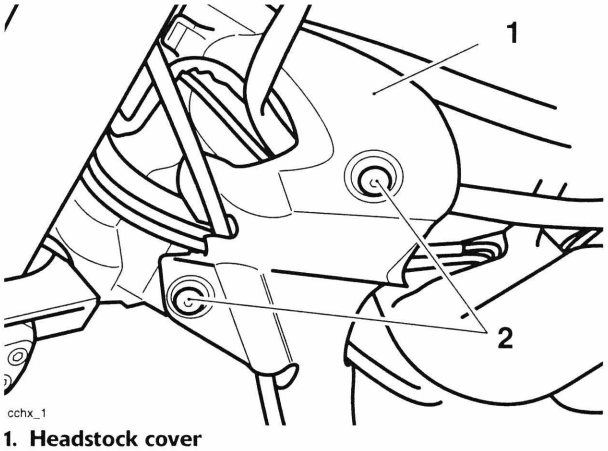

1. Headstock cover
2. Fixings

5. Disconnect the wheel speed sensor multiplug identified as the white connector.
6. Release the wheel speed sensor harness from the brake hose clips.
7. Detach and support the left hand brake caliper.

Note:

- **It is not necessary to disconnect the brake hose.**

Warning

Do not allow the caliper to hang on the brake hose as this may damage the hose. A damaged hose could cause brake failure leading to loss of control and an accident.

8. Release the bolts securing the wheel speed sensor to the fork leg.

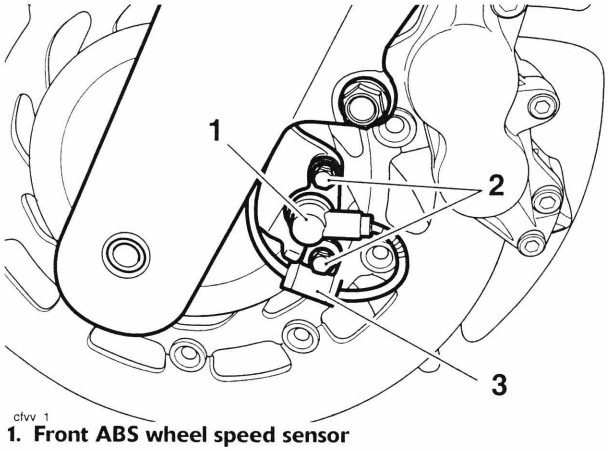

cfvv 1

1. Front ABS wheel speed sensor
2. Fixings
3. P-clip

9. Release the wheel speed sensor harness from the two clips on the fork leg and remove the sensor along with the P-clip.

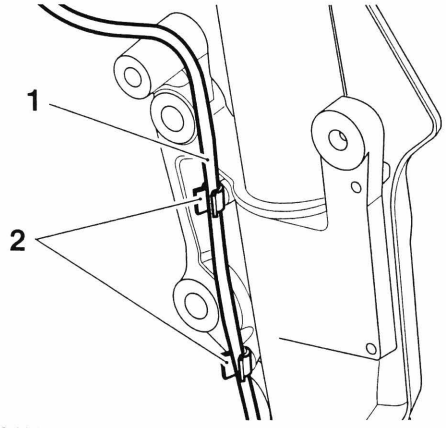

1. Harness
2. Clips

Installation

1. Position the wheel speed sensor and harness P-clip to the fork leg and tighten the fixings to **9 Nm**.
2. Secure the wheel speed sensor harness to the two clips on the fork leg.
3. Refit the brake caliper and tighten the bolts to **50 Nm**.
4. Secure the wheel speed sensor harness to the brake hose clips.
5. Connect the wheel speed sensor multiplug.
6. Refit the left hand headstock cover and tighten the fixings to **3 Nm**.
7. Lower and secure the fuel tank (see page *11-126*).
8. Reconnect the battery, positive (red) lead first.
9. Refit the rider's seat (see page *17-19*).

Front ABS Pulser Ring - Rocket III Touring - ABS and Rocket III Roadster

Removal

1. Remove the front wheel, for Rocket III Roadster, see page *16-8*, for Rocket III Touring, see page *16-10*.

Warning

Damage to the wheel centre could cause misalignment of the wheel when refitted. A dangerous riding condition leading to an accident could result if this warning is ignored.

2. Support the wheel on blocks as illustrated to avoid damage to the wheel centre.

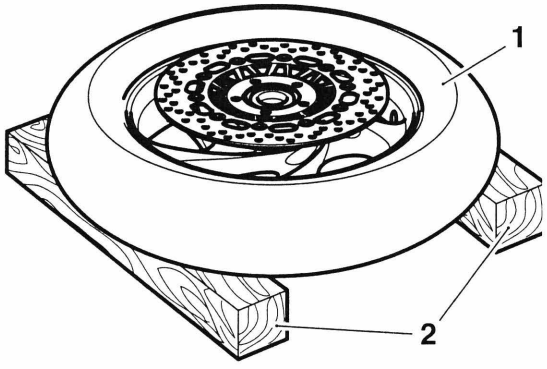

cbzh

1. Wheel
2. Support blocks

3. Remove and discard the five bolts and remove the pulser ring.

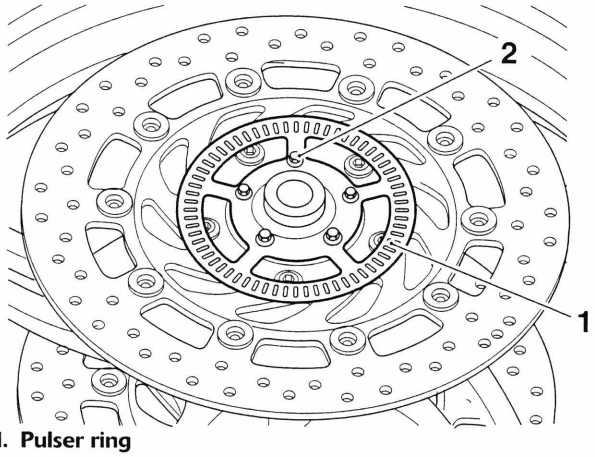

1. Pulser ring
2. Bolts

Inspection

1. Check the pulser ring for damaged, missing or cracked teeth or distortion. Renew the pulser ring as necessary.

Installation

1. Locate the pulser ring on the wheel. Fit new bolts and tighten to **5 Nm**.
2. Refit the front wheel, for Rocket III Roadster, see page *16-9*, for Rocket III Touring, see page *16-11*.

Bleeding the Rear Brakes, Renewing Brake Fluid - Rocket III Touring - ABS and Rocket III Roadster

Using the Triumph diagnostic tool, it is possible to bleed the ABS modulator of trapped air. This is necessary when the hydraulic brake system has been dismantled, or the ABS modulator renewed.

The following procedure is the method to be used for bleeding the rear brakes.

1. Complete the brake bleed procedure as for models without ABS brakes (see page *15-34*) to step 11. Do not remove the bleed tube from the bleed nipple.
2. Connect the Triumph diagnostic tool (see page *15-62*).
3. Follow the on screen menu to ABS Diagnostics. From the menu, select **BLEED SYSTEM** (see page *15-63*).

Note:

- **On pressing the Start button, the diagnostic software will send a command to the ABS ECM to open the 2nd circuit solenoid.**
- **When the ABS modulator 2nd circuit is activated by the bleed command, the rear brake pedal travel will increase as the ABS modulator solenoids are opened and will then decrease as the solenoids are automatically closed.**
- **Pressure must be applied to the rear brake pedal before operating the bleed sequence on the diagnostic tool. An assistant will be required to open the bleed nipple while pressure is applied to the brake pedal.**

4. Apply pressure to the rear brake pedal, press the **Start** button to activate the bleed sequence on the diagnostic tool, and with assistance, release the bleed nipple.
5. Slowly depress the brake pedal and, holding the pedal fully down, close the bleed nipple. Repeat until no more air appears in the bleed tube, maintaining the brake fluid level between the upper and lower reservoir levels whilst bleeding is being carried out.
6. When all air has been expelled from the system, hold down the brake pedal and close the bleed nipple. Tighten the nipple to **8 Nm**.
7. The bleed sequence will run for a maximum of 90 seconds. Press the **Stop** button to end the bleed sequence at any time. Once the bleed sequence has completed the diagnostic tool will display a message **ABS system bleed complete**.

⚠ Caution

The ABS module must be allowed to cool between bleeding operations. Always allow the ABS module to cool for 5 minutes before starting the bleed procedure again. Failure to follow this instruction may result in damage to the ABS module.

8. Repeat the above procedure as necessary until all air is expelled from the system.
9. When all air has been expelled from the system, hold down the brake pedal and close the bleed nipple. Tighten the nipple to **8 Nm**.

Repeat the complete brake bleed procedure as for models without ABS brakes (see page *15-34*).

Rear ABS Wheel Speed Sensor- Rocket III Touring - ABS and Rocket III Roadster

Removal

1. Remove the rider's seat (see page *17-19*).
2. Remove the right hand side cover (see page *17-20*).
3. Disconnect the battery, negative (black) lead first.

Note:

- **Note the routing of the wheel speed sensor harness to aid installation.**

4. Disconnect the wheel speed sensor multiplug identified as the white connector.
5. Release the wheel speed sensor harness from the brake hose clips.
6. Release the bolts securing the wheel speed sensor to the rear brake caliper carrier and remove the sensor along with the P-clip.

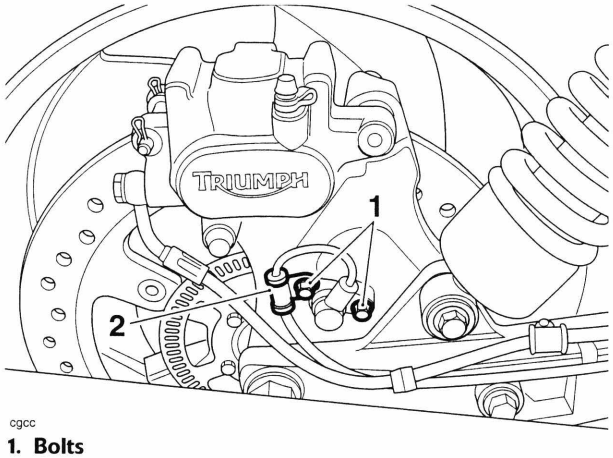

cgcc

1. Bolts
2. P-clip

Installation

1. Position the wheel speed senor and harness P-clip to the rear caliper carrier and tighten the bolts to **7 Nm**.
2. Route the speed sensor harness as noted for removal and secure it to the brake hose clips.
3. Connect the wheel speed sensor multiplug.
4. Reconnect the battery, positive (red) lead first.
5. Refit the right hand side cover (see page *17-21*).
6. Refit the rider's seat (see page *17-19*).

Rear ABS Pulser Ring- Rocket III Touring - ABS and Rocket III Roadster

Removal

1. Remove the rear wheel (see page *16-10*).
2. Remove and discard the five bolts and remove the pulser ring.

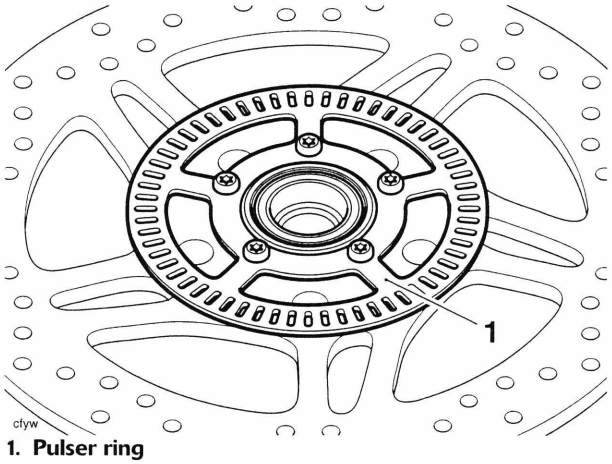

cfyw

1. Pulser ring

Inspection

1. Check the pulser ring for damaged, missing or cracked teeth or distortion. Renew the pulser ring as necessary.

Installation

1. Locate the pulser ring on the wheel. Fit new bolts and tighten to **5 Nm.**
2. Refit the rear wheel (see page *16-17*).

ABS Hydraulic Modulator/ECM - Rocket III Touring - ABS and Rocket III Roadster

Removal

1. Remove the rider's seat see page *17-18* for Rocket III Roadster, see page *17-19* for Rocket III Touring.
2. Disconnect the battery, negative (black) lead first.
3. Remove the exhaust silencers (see page *11-182*).
4. Remove the exhaust link box and the exhaust header (see page *11-182*).
5. Remove the starter motor (see page *18-38*).
6. Remove the heat shield from the modulator bracket.

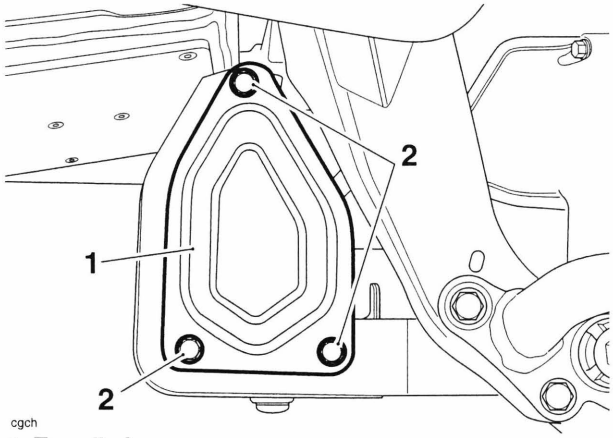

cgch

1. Teaselled
2. Fixings

Caution

To prevent body damage, do not spill brake fluid onto any area of the bodywork or wheels.

7. Drain the fluid from the front master cylinder by bleeding the system at one of the front calipers until all fluid has been expelled (see page *15-63*).
8. Drain the fluid from the rear master cylinder by bleeding the system at the rear caliper until all fluid has been expelled (see page *15-34*).
9. Reposition the rubber boot and disconnect the rear brake light switch.
10. Disconnect the rear brake pipe and brake light switch from the inline adapter. Discard the sealing washers.

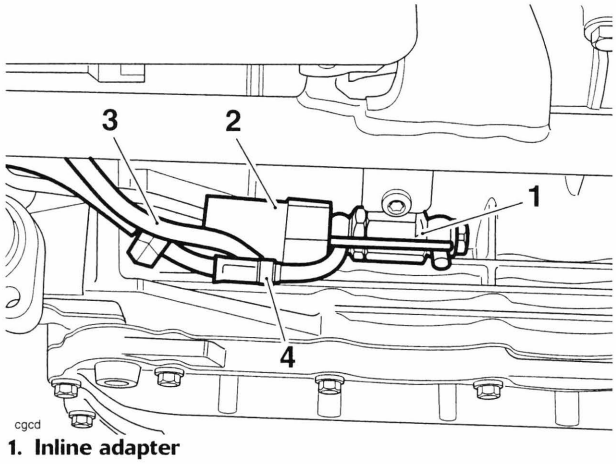

cgcd

1. Inline adapter
2. Rubber boot
3. Brake light switch harness
4. Rear brake line

11. Remove the right hand foot control assembly.

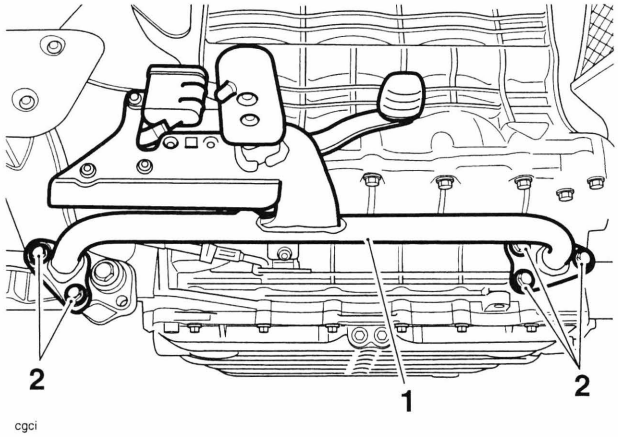

cgci

1. Foot control assembly
2. Bolts

12. Remove the left hand side cover (see page *17-20*).

13. Remove the bolt on the upper right hand side of the modulator bracket.

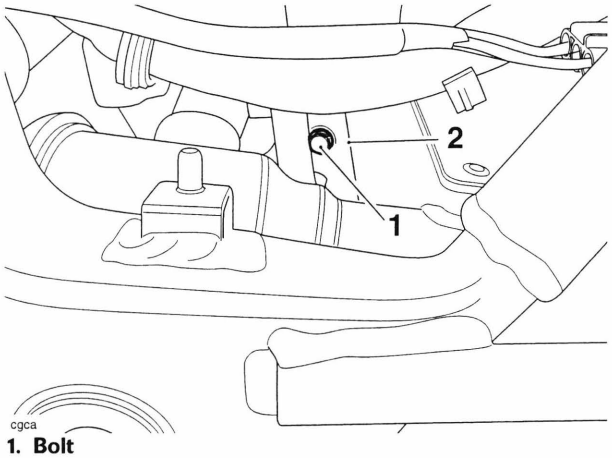

cgca

1. Bolt
2. Bracket

14. Remove the bolt on the upper left hand side of the modulator bracket.

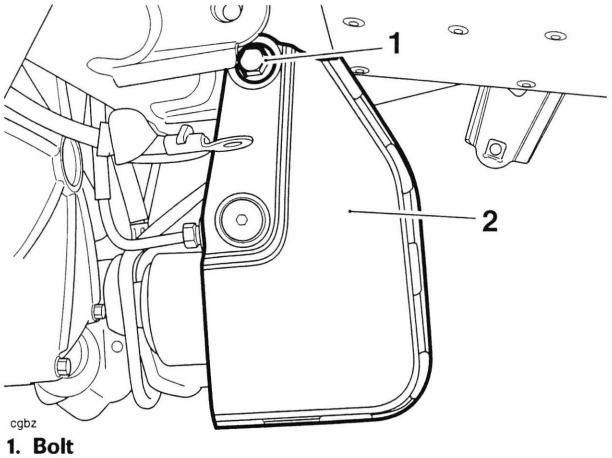

cgbz

1. Bolt
2. Bracket

15. Remove the three screws securing the modulator to its bracket.

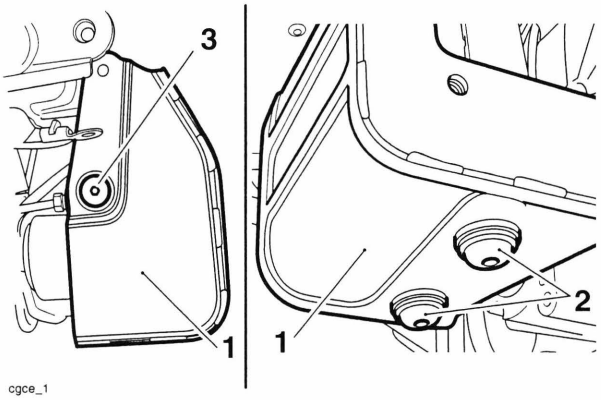

cgce_1

1. Screw, left hand side
2. Screws. lower
3. Bracket

16. Remove the screw securing the modulator bracket to the frame.

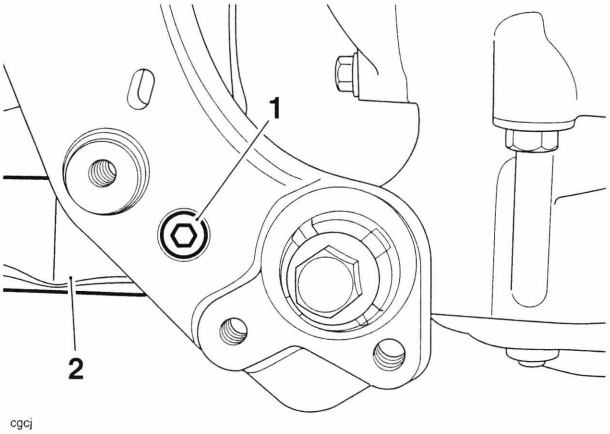

cgcj

1. Screw
2. Bracket

17. Detach the rear brake inline adapters from the modulator bracket and remove the bracket.

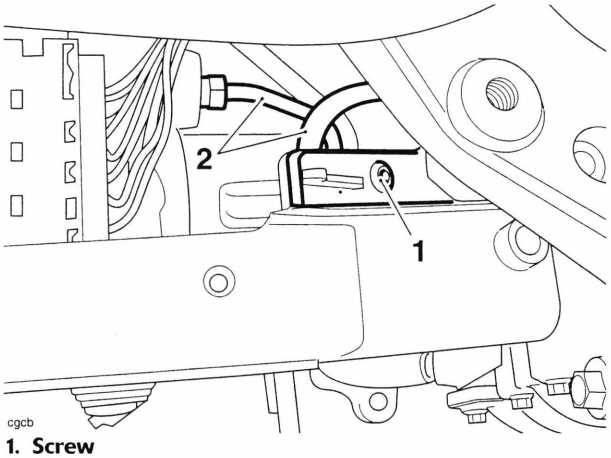

cgcb

1. Screw
2. Rear brake lines

18. To prevent the brake lines from bending, support the ABS modulator.
19. Disconnect the ABS modulator multiplug (see page *15-68*).

Warning

Before the disassembly of any brake lines in the ABS hydraulic circuit, make a note of their position so that they can be returned to the same position when assembled.

If the brake lines are incorrectly assembled, the performance of the ABS system will be seriously compromised, leading to loss of motorcycle control and an accident.

20. Loosen the 4 brake line unions and, taking care not to bend the brake lines, detach the brake lines and remove the modulator.

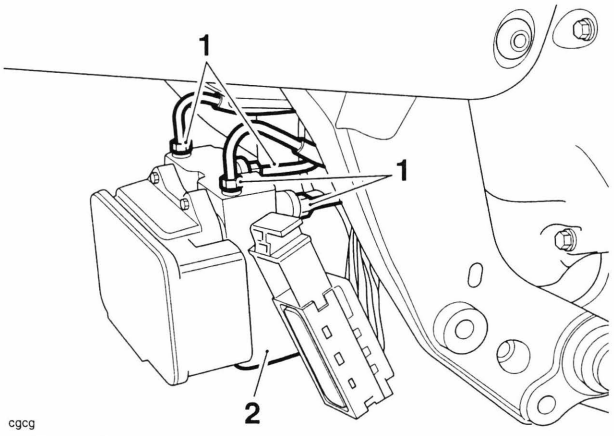

cgcg

1. Brake lines
2. Modulator

Installation

1. Taking care not to bend the brake lines, refit the lines to the ABS modulator and tighten to **17 Nm**.
2. Support the modulator.
3. Connect the modulator multiplug, ensuring the locking device is fully engaged (see page *15-68*).
4. Ensure the rubber mounts and flanged sleeves are fitted to the mounting bracket.

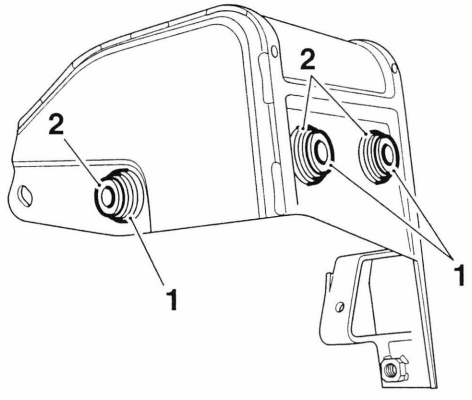

cgcf

1. Rubber mount
2. Flanged sleeves

5. Align the mounting bracket to the modulator and attach the rear brake inline adapters. Tighten the screw to **5 Nm**.
6. Align the mounting bracket and modulator assembly to the frame. Fit the left and right hand upper mounting bolts and tighten them to **27 Nm**.
7. Secure the lower right hand side of the bracket to the frame and tighten the screw to **27 Nm**.
8. Secure the mounting bracket to the modulator and tighten the screws to **9 Nm**.
9. Fit the heat shield to the bracket and tighten the screws to **9 Nm**.
10. Refit the right hand foot control assembly and tighten the bolts to **24 Nm**.
11. Incorporating new washers to either side of the union, refit the brake light switch and rear brake pipe to the inline adapter, tighten the brake light switch to **15 Nm**.

12. Reconnect the brake light switch multiplug and refit the cover.

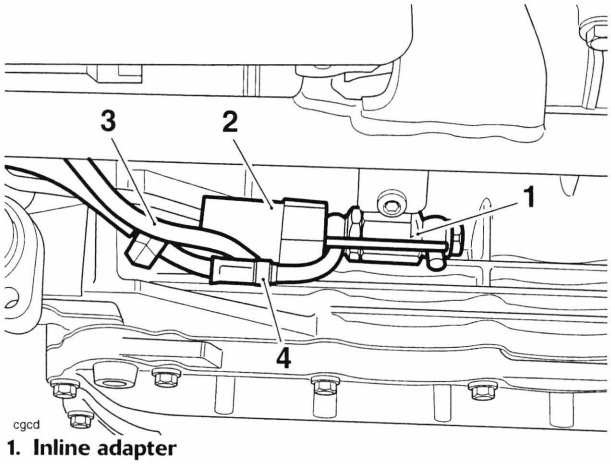

1. Inline adapter
2. Brake light switch cover
3. Harness
4. Rear brake line

13. Refit the left hand side panel (see page *17-21*).
14. Refit the starter motor (see page *18-38*).
15. Refit the exhaust header and exhaust link box (see page *11-185*).
16. Refit the silencers (see page *11-182*).
17. Reconnect the battery, positive (red) lead first.

Warning

Use only DOT 4 specification brake fluid as described in the general information section of the service manual. The use of brake fluid other than those DOT 4 fluids listed in the general information section may reduce the efficiency of the braking system leading to an accident.

Observe the brake fluid handling warnings given in the service manual.

18. Bleed the front brakes (see page *15-18*).
19. Bleed the rear brakes (see page *15-34*).

Warning

It is dangerous to operate the motorcycle with defective brakes; you must have your authorised Triumph dealer take remedial action. Failure to take remedial action may reduce braking efficiency leading to loss of motorcycle control and an accident.

20. Refit the rider's seat (see page *17-18*) for Rocket III and Classic, see page *17-19* for Rocket III Touring).
21. Check that the brakes operate correctly.

Anti-lock Brake System (ABS)

System Description

The Rocket III Roadster is fitted with an electronic anti-lock brake system which is designed to prevent the wheels from locking or skidding by reducing braking effort to the front or rear brake caliper when wheel lock is sensed.

The system consists of a hydraulic modulator and electronic control module (ECM) assembly mounted to a bracket near the exhaust system link box, a front wheel speed sensor mounted to the front fork and a rear wheel speed sensor mounted to the rear brake caliper carrier. Both front and rear wheels have a pulser ring mounted on to the wheel hub.

The front and rear master cylinders are connected via lines to the modulator and from the modulator the lines connect to the brake calipers. The calipers and master cylinders are identical to the non-ABS equipped motorcycle.

The front and rear brake circuits operate as separate systems. The front and rear brakes are not connected in any way inside the modulator.

The modulator ECM continuously measures the front and rear wheel speeds, and from these inputs the ECM calculates the motorcycle speed, wheel deceleration/acceleration, front/rear wheel speed difference and the wheel slip (skid) rate. The latter is calculated by comparing the wheel speeds with the vehicle speed, so that if one wheel speed deviates significantly from the other two readings, this wheel is calculated to be slipping (skidding).

Under braking, if the modulator detects that either wheel is slipping (skidding), due to the brake force exceeding the available traction between the tyre and road surface, the ECM very rapidly releases and re-applies the brake pressure to prevent the wheel from slipping. This is felt through the brake pedal or lever as a rapid 'pulsing'.

If the rider reduces braking effort, or traction increases (so that traction exceeds braking force, the wheel will rotate once more) the wheel will no longer lock up. The ABS system will detect this and stop controlling brake pressure, and return to its monitoring state.

The system has a self diagnostic function built-in which monitors the fail safe relay, solenoid valves, motor relay, wheel speed sensors, power supply and ground, as well as internal ECM functions. In the event of a malfunction being detected, the ECM will illuminate the ABS warning light, and store a diagnostic trouble code in the system memory. This stored data can then be recovered using the Triumph diagnostic tool which is mandatory for all Triumph dealers. In this way, precise diagnosis of a fault can be made and the fault quickly rectified.

Under normal operation, the ABS warning light will stay illuminated after ignition on until the vehicle speed exceeds 6 mph (10 km/h). The ABS performs a self check and if no faults are found the light is extinguished. If a trouble code is stored the ABS warning light will stay illuminated and the ABS will not function, however the brakes will operate normally. If the ABS warning light does not extinguish, or illuminates whilst the motorcycle is being ridden, refer to the ABS system diagnostics (see page *15-62*).

Component Locations

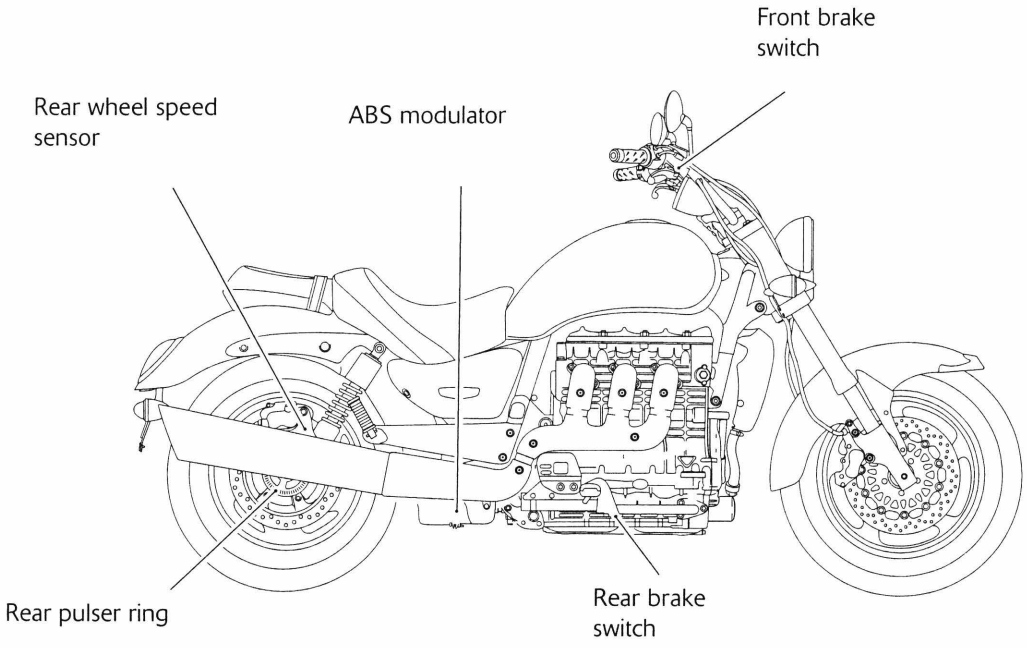

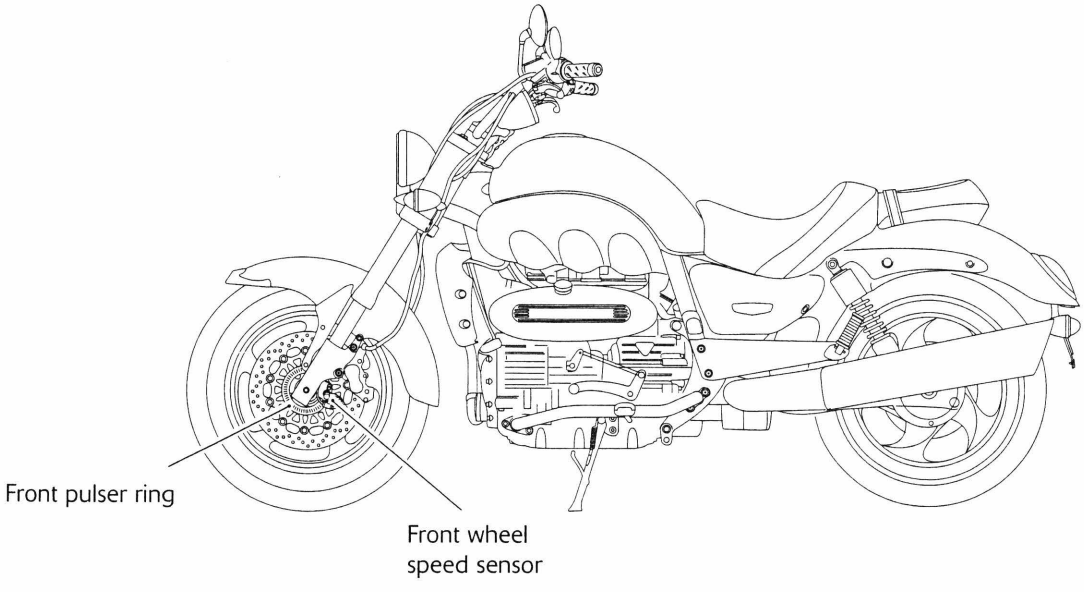

cbnv_2

ABS System Circuit Diagram - Rocket III Touring ABS and Rocket III Roadster

Key To Wiring Circuit Diagram

Key	Item Description
1	ABS Modulator
2	Speedometer
3	Brake Light
4	Rear Wheel Speed Sensor
5	Front Brake Light Switch
6	Front Wheel Speed Sensor
7	Rear Brake Light Switch
8	Engine Control Module
9	Diagnostic Connector
10	Starter Relay
11	Main Fuse Box (Fuse 9)
12	ABS Fuse Box

Key To Wiring Colour Codes

Code	Wiring Colour
B	Black
U	Blue
N	Brown
G	Green
S	Slate/Grey
O	Orange
K	Pink
R	Red
P	Purple
W	White
Y	Yellow
LG	Light Green
LU	Light Blue

ABS ECM Connector Pin Numbering

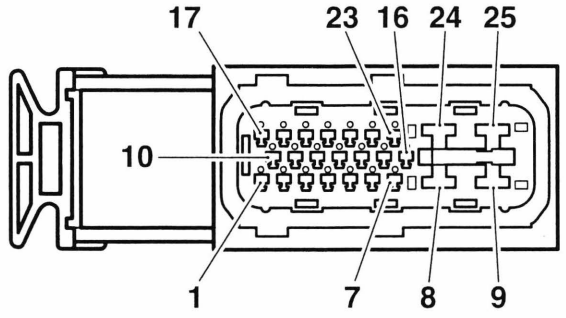

The above illustration shows the pin numbering system used in the ABS circuit diagram.

As viewed on the mating face with the ABS ECM (as per the illustration), pins are numbered from left to right with number one in the bottom left hand corner.

ABS System Circuit Diagrams - Rocket III Touring ABS and Rocket III Roadster

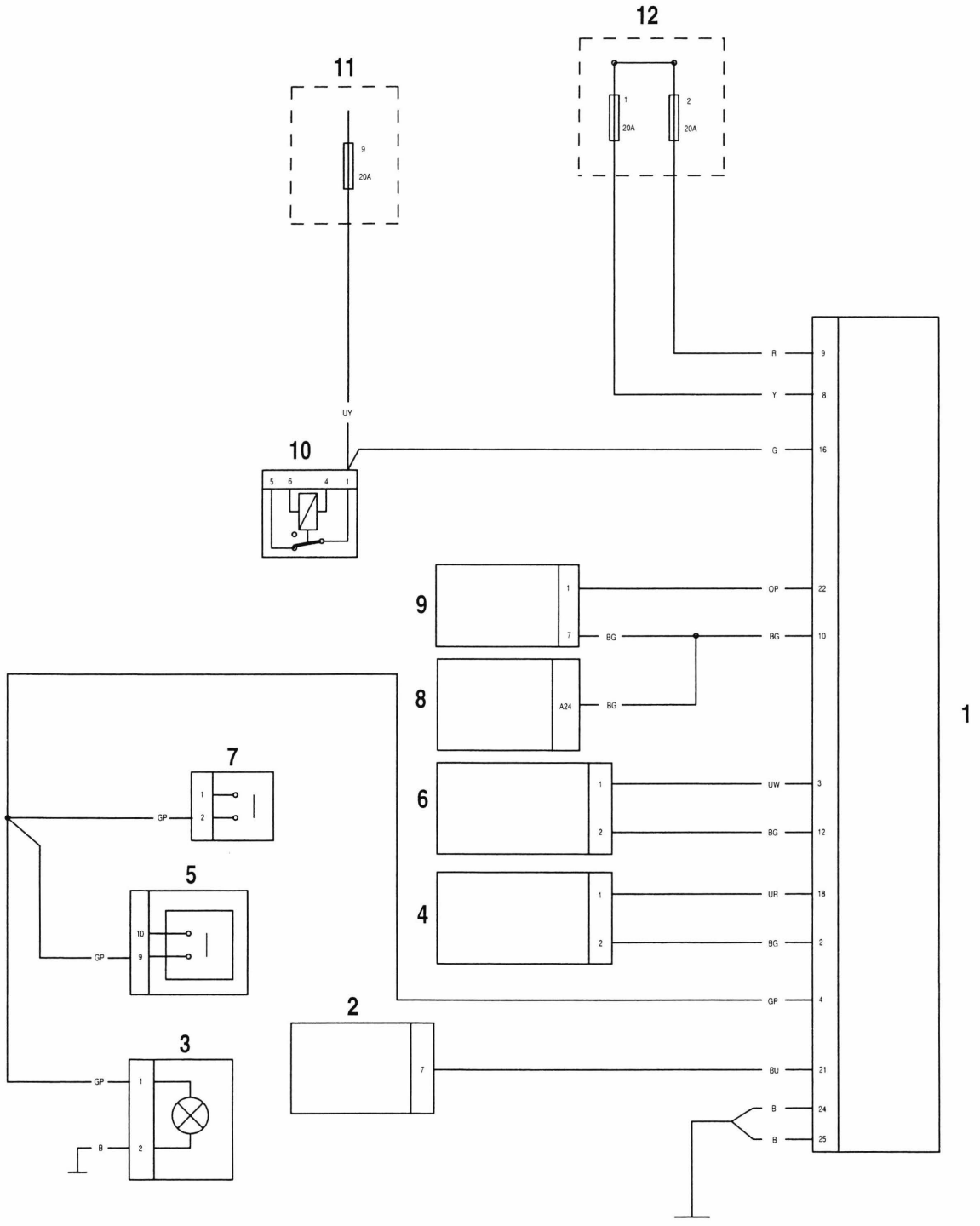

System Diagnostics - Rocket III Touring ABS and Rocket III Roadster

The ABS system has an on-board diagnostics feature which allows service technicians to retrieve stored data from the ECM using Triumph diagnostic software. **Full details of the Triumph diagnostic software operation are given in the Triumph Diagnostic Tool User Guide.**

The software is connected, via an interface cable, to the motorcycle using a dedicated diagnostic plug situated beneath the rider's seat. By using a dedicated plug, no electrical connectors associated with the system are disturbed, reducing potential connector damage.

The software allows the user to retrieve data associated with the system sensors and actuators, test various component functions, read build data and make minor adjustments to the set-up of the system. The data and tests available are described on the following pages.

Diagnostic Tool Connection

1. To connect the Triumph diagnostic interface to the motorcycle, remove the rider's seat (see page *17-18*) and release the diagnostic connector from its location.

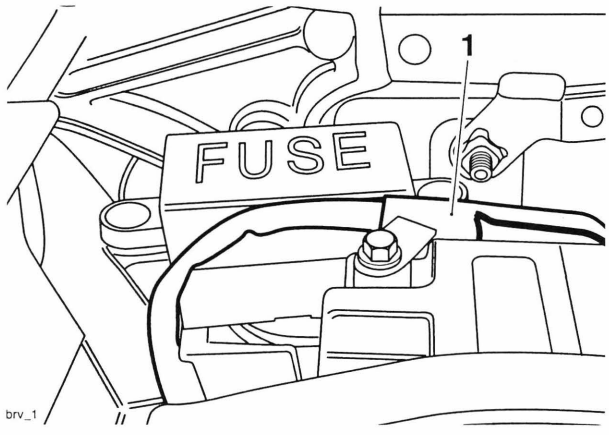

1. Diagnostic connector

2. Plug the diagnostic interface directly in to the diagnostic connector.

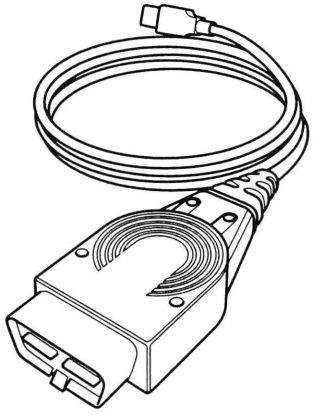

Diagnostic Interface

3. When the diagnostic session is completed, disconnect the diagnostic interface.
4. Refit the diagnostic connector to its location and refit the rider's seat (see page *17-19*).

Triumph Diagnostic Tool

Described on the following pages is the range of information which can be retrieved from the ECM's memory and the adjustments which can be performed using the Triumph diagnostic software.

The tables indicate which tests are performed by the on-board system and what information can be retrieved by the Triumph diagnostic software.

Note:

- **Full details of how to operate the software can be found in the Triumph Diagnostic Tool User Guide, which can be downloaded by authorised Triumph dealers from www.triumphonline.net.**

Build Data - Rocket III Touring ABS and Rocket III Roadster

The **Build Data** screen will display the following information:

Function Examined
ECM type
ECM ID number
Software version number

Current Data - Rocket III Touring ABS and Rocket III Roadster

The **Current Data** screen will display the following information:

Function Examined	Result Reported (Scale)
Front wheel speed	km/h
Rear wheel speed	km/h
Brake switch status	On/Off
ABS warning light status	On/Off

Bleed System

Using the Triumph diagnostic tool, it is possible to bleed the ABS modulator of trapped air. This is necessary when the hydraulic brake system has been dismantled, or the ABS modulator renewed.

- **Full details of this procedure are provided on page *15-48* for front brakes or page *15-52* for rear brakes.**

Diagnostic Trouble Codes - Rocket III Touring ABS and Rocket III Roadster

Diagnostic trouble codes (DTCs) are logged in the ABS ECM memory when there is a confirmed fault in the system.
The codes are reported to the Triumph diagnostic tool as a four digit code.
DTCs can be removed at any time using the Triumph diagnostic tool.
The system will log the diagnostic trouble codes listed below:

Diagnostic Trouble Code (DTC)	Fault Description
C1611	Front Wheel Sensor Open Circuit/Short Circuit
C1612	Front Wheel Sensor Abnormal Input/Losing Contact
C1613	Rear Wheel Sensor Open Circuit/Short Circuit
C1614	Rear Wheel Sensor Abnormal Input/Losing Contact
C1621	Front Wheel Pulser Gear Missing Teeth
C1623	Rear Wheel Pulser Gear Missing Teeth
C1631	Front Wheel Input Solenoid Open/Short Circuit
C1632	Front Wheel Output Solenoid Open/Short Circuit
C1633	Rear Wheel Input Solenoid Open/Short Circuit
C1634	Rear Wheel Output Solenoid Open/Short Circuit
C1641	Front Wheel Actuator (Hydraulic Control) Wheel Lock
C1643	Rear Wheel Actuator (Hydraulic Control) Wheel Lock
C1651	Motor - Lock
C1652	Motor - Stuck OFF
C1653	Motor - Stuck ON
C1654	Solenoid Relay - Stuck OFF/ON
C1661	Power Source Voltage Drop
C1662	Power Source Voltage Rise
C1671	Different Tyre Diameter
C1681	Abnormal ECU

Diagnostic Trouble Codes - Rocket III Touring ABS and Rocket III Roadster

Dependant on the DTC stored, the ABS ECM will act in one of two ways:

- Inhibit ABS operation immediately, irrespective of the ABS operating mode;

or

- Allow the ABS operation to complete before inhibiting the ABS.

Once the ABS ECM has inhibited ABS function, the ECM will act in one of three ways:

- Allow the ABS to resume operation if the fault clears;

or

- Allow ABS operation after an ignition cycle if the fault clears;

or

- Inhibit the ABS function until the fault is rectified and the DTC erased.

The ABS system will act on the DTC stored according to the following table:

Fault Description	**ABS warning light illuminated when fault is logged**	**ABS operation is inhibited when fault is logged**	**ABS continues to operate when fault is logged (Only when ABS is Active. When ABS is no longer active, operation is inhibited)**	**ABS will resume operation if fault clears**
Front Wheel Sensor Open Circuit/Short Circuit	Yes	Yes		No
Front Wheel Sensor Abnormal Input/Losing Contact	Yes	Yes	Yes	Yes, if after ignition cycle, no fault is detected. DTC remains stored
Rear Wheel Sensor Open Circuit/Short Circuit	Yes	Yes		No
Rear Wheel Sensor Abnormal Input/Losing Contact	Yes	Yes	Yes	Yes, if after ignition cycle, no fault is detected. DTC remains stored
Front Wheel Pulser Gear Missing Teeth	Yes		Yes	Yes, if after ignition cycle, no fault is detected for 1 second and speed exceeds 30 km/h. DTC remains stored
Rear Wheel Pulser Gear Missing Teeth	Yes		Yes	Yes, if after ignition cycle, no fault is detected for 1 second and speed exceeds 30 km/h. DTC remains stored
Front Wheel Input Solenoid Open/Short Circuit	Yes	Yes		No
Front Wheel Output Solenoid Open/Short Circuit	Yes		Yes	No
Rear Wheel Input Solenoid Open/Short Circuit	Yes	Yes		No
Rear Wheel Output Solenoid Open/Short Circuit	Yes		Yes	No
Front Wheel Actuator (Hydraulic Control) Wheel Lock	Yes		Yes	Yes, if after ignition cycle, no fault is detected. DTC remains stored

Fault Description	ABS warning light illuminated when fault is logged	ABS operation is inhibited when fault is logged	ABS continues to operate when fault is logged (Only when ABS is Active. When ABS is no longer active, operation is inhibited)	ABS will resume operation if fault clears
Rear Wheel Actuator (Hydraulic Control) Wheel Lock	Yes		Yes	Yes, if after ignition cycle, no fault is detected. DTC remains stored
Motor - Lock	Yes		Yes	No
Motor - Stuck OFF	Yes		Yes	No
Motor - Stuck ON	Yes		Yes	No
Solenoid Relay - Stuck OFF/ON	Yes	Yes		No
Power Source Voltage Drop	Yes, Light will extinguish if fault clears	Yes		Yes, if voltage rises above a preset threshold for more than 10 seconds
Power Source Voltage Rise	Yes, Light will extinguish if fault clears	Yes		Yes, if voltage drops below a preset threshold for more than 10 seconds
Different Tyre Diameter	Yes	Yes		No
Abnormal ECU	Yes	Yes		No

Electrical Connectors - Rocket III Touring ABS and Rocket III Roadster

Before beginning any diagnosis, the following connector related information should be noted:

Note:

- **A major cause of hidden electrical faults can be traced to faulty electrical connectors.**

For example:

- Dirty/corroded terminals.
- Damp terminals.
- Broken or bent cable pins within multi-plugs.

For example, the ABS electronic control module (ABS ECM) relies on the supply of accurate information to enable it to monitor and control the brake system. One dirty terminal will cause an excessive voltage drop resulting in an incorrect signal to the ECM.

If, when carrying out fault diagnosis, a fault appears to clear by simply disconnecting and reconnecting an electrical plug, examine each disconnected plug for the following.

Before Disconnection:

- If testing with a voltmeter, the voltage across a connector should be virtually battery volts (unless a resistor is fitted in the circuit). If there is a noticeable change, suspect faulty/dirty connections.

When Disconnecting a Connector:

- Check for a security device that must be released before the connector can be separated. For example, barb, hook and eye, etc.

When Inspecting a Connector:

- Check that the individual pins have not been bent.
- Check for dampness/dirt/corrosion.
- Check cables for security.
- Check cable pin joints for damage.

When Connecting a Connector:

- Ensure there is no dirt around the connector/seal.
- Push together squarely to ensure terminals are not bent or incorrectly located.
- Push the two halves together positively.

Disconnection of ABS ECM connector - Rocket III Touring ABS and Rocket III Roadster

Caution

When disconnecting a connector, never pull directly on the wires as this may result in cable and connector damage.

Caution

Never disconnect the ABS ECM when the ignition switch is in the ON position as this may cause multiple fault codes to be logged in the ECM memory.

Always disconnect an ECM after disconnecting the battery negative (black) lead first.

1. Lift up the locking device and gently pull back on the connector to release it from the ECM.

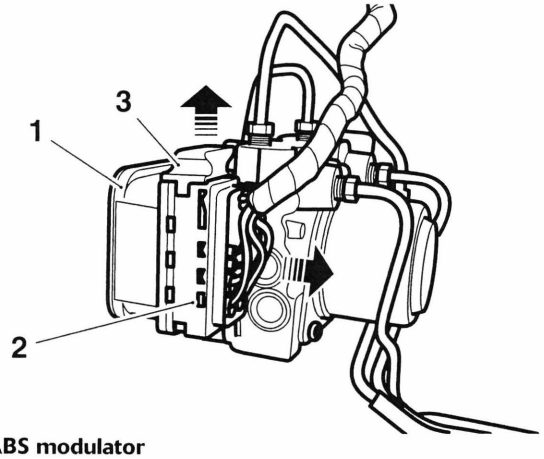

cfyr_5

1. ABS modulator
2. Connector
3. Locking device

Note:

- **The ABS ECM is an integral part of the ABS modulator. Under no circumstances should the ECM be removed from the ABS modulator. If a new ECM is required, repair is by replacement of the ABS modulator and ECM as an assembly only.**

Reconnection of ABS ECM connector - Rocket III Touring ABS and Rocket III Roadster

Caution

Damage to the connector pins may result if an attempt to fit the connectors incorrectly is made.

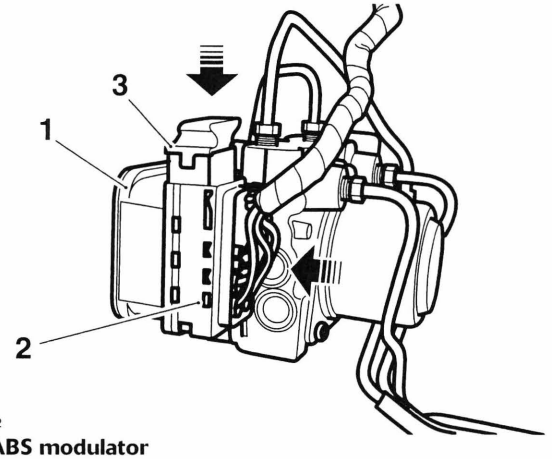

cfyr_2

1. ABS modulator
2. Connector
3. Locking device

2. Fit the connector into its socket and, whilst holding the connector in place, push down gently on the locking device until it locks.

Further Diagnosis - Rocket III Touring ABS and Rocket III Roadster

The tables that follow will, if used correctly, help to pinpoint a fault in the system once a diagnostic trouble code has been stored.

Pinpoint Tests

Before starting pinpoint tests:

1. Delete the stored DTCs.
2. Switch the ignition OFF and ON.

⚠ Warning

If the ABS is not functioning, the brake system will continue to function as a non-ABS braking system. Do not continue to ride for longer than is necessary with the indicator light illuminated. Ride with extreme caution when performing diagnostic troubleshooting on a non-functioning ABS system. In this situation braking too hard will cause the wheels to lock resulting in loss of motorcycle control and an accident.

3. Ride the motorcycle at a road speed in excess of 30 km/h. If the DTC is repeated, proceed to the relevant pinpoint test.
4. If the DTC is not repeated this indicates the DTC may have been stored due to external influences such as bad road surfaces or electrical interference.

After completion of the pinpoint tests:

1. Delete the stored DTCs.
2. Switch the ignition OFF and ON.
3. Ride the motorcycle at a road speed in excess of 30 km/h. If the DTC is repeated proceed to the relevant pinpoint test.
4. If a DTC is stored there is a further fault. Read the stored DTC and refer to the relevant pinpoint test.

ABS Warning Light ON (No DTCs Stored) - Rocket III Touring ABS and Rocket III Roadster

Fault Code	Possible cause	Action
ABS Warning Light ON (No DTCs Stored)	ABS Ignition supply fuse/circuit fault ABS Warning light circuit fault	Ensure ABS ECM connector is secure. Disconnect ABS ECM connector and proceed to pinpoint test 1:

Pinpoint Tests

	Test	Result	Action
1	Check cable and terminal integrity: - ABS ECM connector pin 16 and Ground pin 24	OK	Proceed to test 2
		Faulty	Rectify fault, proceed to test 5
2	Check cable continuity of the ABS ignition supply circuit: With the Ignition 'ON', check voltage between: - ABS ECM connector pin 16 and Ground	Same as 'across battery' voltage	Proceed to test 3
		Less than 'across battery' voltage	Locate and rectify wiring fault, proceed to test 5
3	Check cable continuity of the ABS warning light circuit: Check voltage between: - ABS ECM connector pin 21 and Ground	Voltage greater than 1.5 V	Proceed to test 4
		Voltage less than 1.5 V	Locate and rectify fault, proceed to test 5
4	Check cable continuity of the ABS warning light circuit: - Short ABS ECM connector pin 21 and Ground pin 24 together: Turn Ignition 'ON'	ABS warning light 'OFF'	Proceed to test 5
		ABS warning light 'ON'	Locate and rectify fault, proceed to test 5
5	Reconnect ABS ECM harness, clear fault code and test ABS to verify fault cleared	OK	Action complete - quit test
		Fault still present	Contact Triumph service

Circuit Diagram - Rocket III Touring ABS and Rocket III Roadster

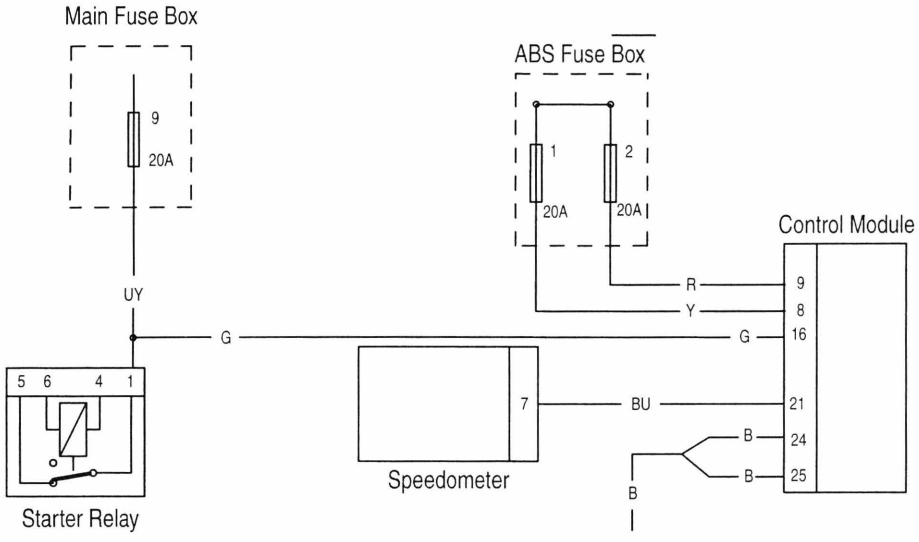

ABS Warning Light Does not Illuminate (No DTCs Stored) - Rocket III Touring ABS and Rocket III Roadster

Fault Code	Possible cause	Action
ABS Warning Light OFF (No DTCs Stored)	Warning light circuit fault ABS ECM ground circuit fault	Ensure ABS ECM connector is secure. Ensure ABS ECM ground connection is secure. Disconnect ABS ECM connector and proceed to pinpoint test 1:

Pinpoint Tests

	Test	Result	Action
1	Check cable and terminal integrity: - ABS ECM connector pin 16 and Ground	OK	Proceed to test 2
		Faulty	Rectify fault, proceed to test 6
2	Check the ABS warning light circuit fuse (fuse 9 in the main fuse box):	OK	Proceed to test 3
		Faulty	Replace fuse, proceed to test 6
3	Check cable for short to voltage: With Ignition 'OFF', check voltage between: - ABS ECM connector pin 16 and Ground	0 V	Proceed to test 4
		Above 3 V	Locate and rectify wiring fault, proceed to test 6
4	Check cable for short to ground: With ignition 'ON', Check the ABS warning light circuit voltage between: - ABS ECM connector pin 21 and Ground	Voltage greater than 1.5 V	Proceed to test 5
		Voltage less than 1.5 V	Locate and rectify fault, proceed to test 6
5	Check cable for continuity: ABS ECM connector pin 24 and Ground: Turn Ignition 'ON'	OK	Proceed to test 6
		Faulty	Locate and rectify fault, proceed to test 6
6	Reconnect ABS ECM harness, clear fault code and test ABS to verify fault cleared	OK	Action complete - quit test
		Fault still present	Contact Triumph service

Circuit Diagram - Rocket III Touring ABS and Rocket III Roadster

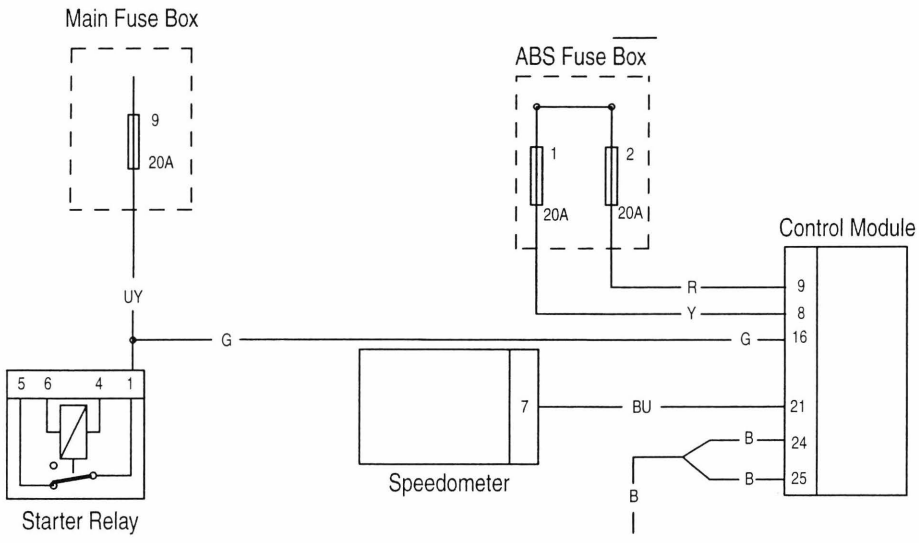

Front Wheel Sensor Open Circuit/Short Circuit - Rocket III Touring ABS and Rocket III Roadster

Fault Code	Possible cause	Action
C1611	Front wheel speed sensor circuit fault	Ensure ABS ECM connector is secure. Ensure wheel speed sensor connector is secure. Disconnect ABS ECM connector and proceed to pinpoint test 1:

Pinpoint Tests

	Test	Result	Action
1	Check cable and terminal integrity:	OK	Proceed to test 2
	- ABS ECM connector pin 3 and ABS ECM connector pin 12	Faulty	Rectify fault, proceed to test 9
2	Check cable for short circuit:	OK	Proceed to test 4
	- ABS ECM connector pin 12 and Ground	Short circuit	Proceed to test 3
3	Disconnect the front wheel speed sensor connector. Check cable for short circuit:	OK	Replace the wheel speed sensor, proceed to test 9
	Wheel speed sensor connector pin 2 (motorcycle harness side) and Ground	Short circuit	Locate and rectify wiring harness fault, proceed to test 9
4	Check cable for short circuit:	OK	Proceed to test 6
	- ABS ECM connector pin 3 and Ground	Short circuit	Proceed to test 5
5	Check cable for short circuit:	OK	Replace the wheel speed sensor, proceed to test 9
	- Wheel speed sensor connector pin 1 (motorcycle harness side) and Ground	Short circuit	Locate and rectify wiring harness fault, proceed to test 9
6	Check cable continuity:	OK	Proceed to test 7
	- ABS ECM connector pin 12 and Wheel speed sensor connector pin 2 (motorcycle harness side)	Open circuit	Locate and rectify wiring harness fault, proceed to test 9
7	Check cable continuity:	OK	Proceed to test 8
	- ABS ECM connector pin 3 and Wheel speed sensor connector pin 1 (motorcycle harness side)	Open circuit	Locate and rectify wiring harness fault, proceed to test 9
8	Reconnect the front wheel speed sensor connector. Check the wheel speed sensor operation:	3 mA to 14 mA	Proceed to test 9
	- Connect a suitable voltage supply between 4.5 V and 16 V between ABS ECM connector pin 12 (positive) and pin 3 (negative), and measure the current consumption of the wheel speed sensor	Faulty	Replace the wheel speed sensor, proceed to test 9
9	Reconnect ABS ECM harness, clear fault code and test ABS to verify fault cleared	OK	Action complete - quit test
		Fault still present	Contact Triumph service

Circuit Diagram - Rocket III Touring ABS and Rocket III Roadster

Wheel speed sensor current consumption data under typical conditions:

Voltage	Min	Typical	Max
Low (4.5 V)	3.1 mA	4.1 mA	5.3 mA
High (16 V)	8.1 mA	10.5 mA	13.6 mA

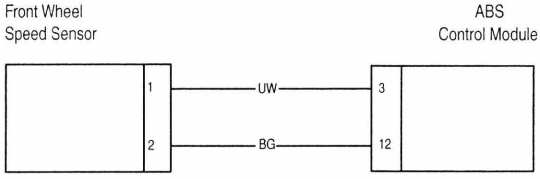

Rear Wheel Sensor Open Circuit/Short Circuit - Rocket III Touring ABS and Rocket III Roadster

Fault Code	Possible cause	Action
C1613	Rear wheel speed sensor circuit fault	Ensure ABS ECM connector is secure. Ensure wheel speed sensor connector is secure. Disconnect ABS ECM connector and proceed to pinpoint test 1:

Pinpoint Tests

	Test	Result	Action
1	Check cable and terminal integrity:	OK	Proceed to test 2
	- ABS ECM connector pin 2 and ABS ECM connector pin 18	Faulty	Rectify fault, proceed to test 9
2	Check cable for short circuit:	OK	Proceed to test 4
	- ABS ECM connector pin 2 and Ground	Short circuit	Proceed to test 3
3	Disconnect the front wheel speed sensor connector. Check cable for short circuit:	OK	Replace the wheel speed sensor, proceed to test 9
	- Wheel speed sensor connector pin 2 (motorcycle harness side) and Ground	Short circuit	Locate and rectify wiring harness fault, proceed to test 9
4	Check cable for short circuit:	OK	Proceed to test 6
	- ABS ECM connector pin 18 and Ground	Short circuit	Proceed to test 5
5	Check cable for short circuit:	OK	Replace the wheel speed sensor, proceed to test 9
	- Wheel speed sensor connector pin 1 (motorcycle harness side) and Ground	Short circuit	Locate and rectify wiring harness fault, proceed to test 9
6	Check cable continuity:	OK	Proceed to test 7
	- ABS ECM connector pin 2 and Wheel speed sensor connector pin 2 (motorcycle harness side)	Open circuit	Locate and rectify wiring harness fault, proceed to test 9
7	Check cable continuity:	OK	Proceed to test 8
	- ABS ECM connector pin 18 and Wheel speed sensor connector pin 1 (motorcycle harness side)	Open circuit	Locate and rectify wiring harness fault, proceed to test 9
8	Reconnect the front wheel speed sensor connector. Check the wheel speed sensor operation:	3 mA to 14 mA	Proceed to test 9
	- Connect a suitable voltage supply between 4.5 V and 16 V between ABS ECM connector pin 2 (positive) and pin 18 (negative), and measure the current consumption of the wheel speed sensor	Faulty	Replace the wheel speed sensor, proceed to test 9
9	Reconnect ABS ECM harness, clear fault code and test ABS to verify fault cleared	OK	Action complete - quit test
		Fault still present	Contact Triumph service

Circuit Diagram - Rocket III Touring ABS and Rocket III Roadster

Wheel speed sensor current consumption data under typical conditions:

Voltage	Min	Typical	Max
Low (4.5 V)	3.1 mA	4.1 mA	5.3 mA
High (16 V)	8.1 mA	10.5 mA	13.6 mA

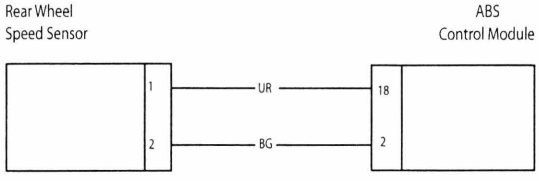

Front Wheel Sensor Abnormal Input/Losing Contact - Rocket III Touring ABS and Rocket III Roadster

Fault Code	Possible cause	Action
C1612	Front wheel speed sensor poor signal Incorrect Wheel speed sensor air gap Damaged or dirty pulser ring Loose or incorrectly installed wheel speed sensor	Ensure ABS ECM connector is secure. Ensure wheel speed sensor connector is secure. Proceed to pinpoint test 1:

Pinpoint Tests

	Test	Result	Action
1	Measure the air gap of the front wheel speed sensor between the sensor and the pulser ring: - Air gap between 0.1 mm to 1.5 mm	OK	Proceed to test 2
		Faulty	Rectify the fault and proceed to test 5
2	Check the pulser ring for damage or contamination by road grime or ferrous metal filings	OK	Proceed to test 3
		Faulty	Clean or replace the ABS pulser ring, proceed to test 5
3	Check the wheel speed sensors for correct installation, and the fixings for correct torque	OK	Proceed to test 4
		Faulty	Rectify the fault and proceed to test 5
4	Check the wheel speed sensor circuit (see page *15-74*)	OK	Contact Triumph service
		Faulty	Rectify the fault and proceed to test 5
5	Clear fault code and test ABS to verify fault cleared	OK	Action complete - quit test
		Fault still present	Contact Triumph service

Rear Wheel Sensor Abnormal Input/Losing Contact - Rocket III Touring ABS and Rocket III Roadster

Fault Code	Possible cause	Action
C1614	Rear wheel speed sensor poor signal Incorrect Wheel speed sensor air gap Damaged or dirty pulser ring Loose or incorrectly installed wheel speed sensor	Ensure ABS ECM connector is secure. Proceed to pinpoint test 1:

Pinpoint Tests

	Test	Result	Action
1	Measure the air gap of the front wheel speed sensor between the sensor and the pulser ring: - Air gap between 0.1 mm to 1.5 mm	OK	Proceed to test 2
		Faulty	Rectify the fault and proceed to test 5
2	Check the pulser ring for damage or contamination by road grime or ferrous metal filings	OK	Proceed to test 3
		Faulty	Clean or replace the ABS pulser ring, proceed to test 5
3	Check the wheel speed sensors for correct installation, and the fixings for correct torque	OK	Proceed to test 4
		Faulty	Rectify the fault and proceed to test 5
4	Check the wheel speed sensor circuit (see page *15-76*)	OK	Contact Triumph service
		Faulty	Rectify the fault and proceed to test 5
5	Clear fault code and test ABS to verify fault cleared	OK	Action complete - quit test
		Fault still present	Contact Triumph service

Front Wheel Pulser Gear Missing Teeth - Rocket III Touring ABS and Rocket III Roadster

Fault Code	Possible cause	Action
C1621	Incorrect Wheel speed sensor air gap Damaged or dirty pulser ring Loose or incorrectly installed wheel speed sensor Damaged/incorrect wheels	Ensure ABS ECM connector is secure. Proceed to pinpoint test 1:

Pinpoint Tests

	Test	Result	Action
1	Measure the air gap of the front wheel speed sensor between the sensor and the pulser ring: - Air gap between 0.1 mm to 1.5 mm	OK	Proceed to test 2
		Faulty	Rectify the fault and proceed to test 5
2	Check the pulser ring for damage or contamination by road grime or ferrous metal filings	OK	Proceed to test 3
		Faulty	Clean or replace the ABS pulser ring, proceed to test 5
3	Check the wheel speed sensors for correct installation, and the fixings for correct torque	OK	Proceed to test 4
		Faulty	Rectify the fault and proceed to test 5
4	Check the motorcycle wheel for damage/incorrect size	OK	Proceed to test 4
		Faulty	Rectify the fault and proceed to test 5
5	Clear fault code and test ABS to verify fault cleared	OK	Action complete - quit test
		Fault still present	Contact Triumph service

Rear Wheel Pulser Gear Missing Teeth - Rocket III Touring ABS and Rocket III Roadster

Fault Code	Possible cause	Action
C1623	Incorrect Wheel speed sensor air gap Damaged or dirty pulser ring Loose or incorrectly installed wheel speed sensor Damaged/incorrect wheels	Ensure ABS ECM connector is secure. Proceed to pinpoint test 1:

Pinpoint Tests

	Test	Result	Action
1	Measure the air gap of the front wheel speed sensor between the sensor and the pulser ring: - Air gap between 0.1 mm to 1.5 mm	OK	Proceed to test 2
		Faulty	Rectify the fault and proceed to test 5
2	Check the pulser ring for damage or contamination by road grime or ferrous metal filings	OK	Proceed to test 3
		Faulty	Clean or replace the ABS pulser ring, proceed to test 5
3	Check the wheel speed sensors for correct installation, and the fixings for correct torque:	OK	Proceed to test 4
		Faulty	Rectify the fault and proceed to test 5
4	Check the motorcycle wheel for damage/incorrect size	OK	Proceed to test 4
		Faulty	Rectify the fault and proceed to test 5
5	Clear fault code and test ABS to verify fault cleared	OK	Action complete - quit test
		Fault still present	Contact Triumph service

Front or Rear Input/output solenoid Open/Short Circuit - Rocket III Touring ABS and Rocket III Roadster

Fault Code	Possible cause	Action
Front: C1631; C1632 Rear: C1633; C1634 C1654	ABS solenoid circuit fault	Ensure ABS ECM connector is secure. Disconnect ABS ECM connector and proceed to pinpoint test 1:

Pinpoint Tests

	Test	Result	Action
1	Check cable and terminal integrity:	OK	Proceed to test 2
	- ABS ECM connector pin 8 and Ground	Faulty	Rectify fault, proceed to test 5
2	Check the ABS solenoid fuse (fuse 1 in ABS fuse box):	OK	Proceed to test 3
		Faulty	Replace fuse, proceed to test 5
3	Check cable continuity: With Ignition 'ON', check voltage between:	Same as 'across battery' voltage	Proceed to test 4
	- ABS ECM connector pin 8 and Ground	Less than 'across battery' voltage	Locate and rectify wiring fault, proceed to test 5
4	Check cable for continuity:	OK	Proceed to test 5
	- ABS ECM connector pin 24 and Ground	Faulty	Locate and rectify fault, proceed to test 5
5	Clear fault code and test ABS to verify fault cleared	OK	Action complete - quit test
		Fault still present	Contact Triumph service

Circuit Diagram

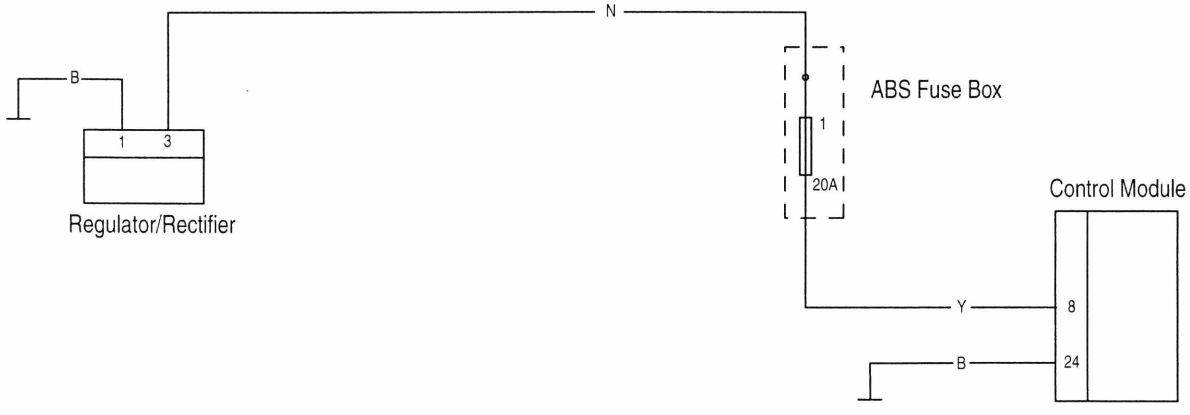

Front or Rear Wheel Actuator (Hydraulic Control) Wheel Lock - Rocket III Touring ABS and Rocket III Roadster

Fault Code	Possible cause	Action
C1641; C1643	Binding brake Incorrect Wheel speed sensor air gap Loose or incorrectly installed wheel speed sensor	Ensure ABS ECM connector is secure. Proceed to pinpoint test 1:

Pinpoint Tests

	Test	Result	Action
1	Check the relevant wheel for brake bind caused by caliper or master cylinder faults, or other mechanical causes	OK	Proceed to test 2
		Faulty	Rectify the fault and proceed to test 4
2	Measure the air gap of the wheel speed sensor between the sensor and the pulser ring: - Air gap between 0.1 mm to 1.5 mm	OK	Proceed to test 3
		Faulty	Rectify the fault and proceed to test 4
3	Check the wheel speed sensors for correct installation, and the fixings for correct torque	OK	Proceed to test 4
		Faulty	Rectify the fault and proceed to test 4
4	Clear fault code and test ABS to verify fault cleared	OK	Action complete - quit test
		Fault still present	Contact Triumph service

Motor - Lock; Motor Stuck OFF; Motor Stuck ON - Rocket III Touring ABS and Rocket III Roadster

Fault Code	Possible cause	Action
C1651; C1652; C1653	Motor circuit fault Motor runs continually Motor does not run at all	Ensure ABS ECM connector is secure. Turn the ignition 'ON'. Proceed to pinpoint test 1:

Pinpoint Tests

	Test	Result	Action
1	Check the motor function: Check that with the motorcycle stationary and the ABS ACM modulator connected, the motor does not operate	OK	Proceed to test 2
		Motor runs continually	Contact Triumph service
2	Check the ABS motor circuit fuse (fuse 2 in ABS fuse box)	OK	Proceed to test 3
		Faulty	Replace fuse and proceed to test 5
3	Check cable continuity: With Ignition 'ON', check voltage between: - ABS ECM connector pin 9 and Ground	Same as 'across battery' voltage	Proceed to test 4
		Less than 'across battery' voltage	Locate and rectify wiring fault, proceed to test 5
4	Check cable for continuity: - ABS ECM connector pin 25 and Ground	OK	Proceed to test 5
		Faulty	Locate and rectify fault, proceed to test 5
5	Reconnect ABS ECM harness, clear fault code and test ABS to verify fault cleared	OK	Action complete - quit test
		Fault still present	Contact Triumph service

Circuit Diagram

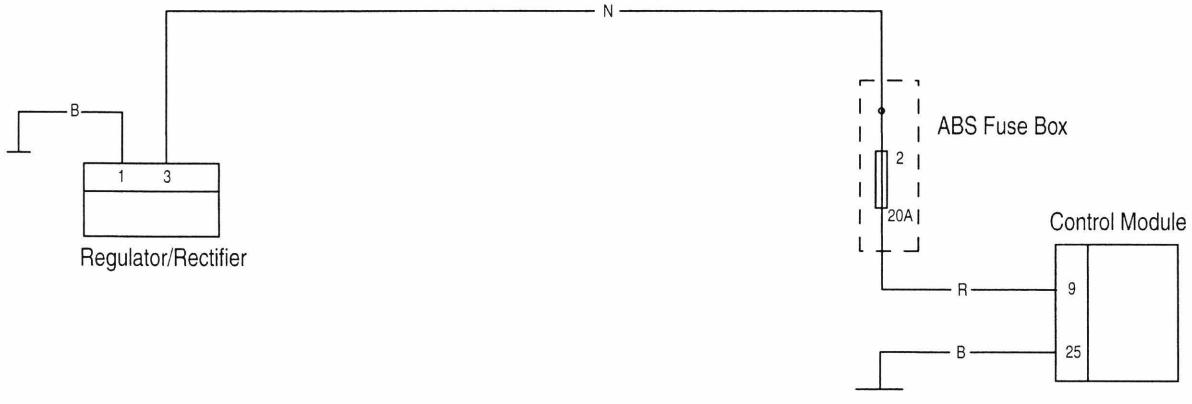

Power Source Voltage Drop/Voltage Rise - Rocket III Touring ABS and Rocket III Roadster

Fault Code	Possible cause	Action
C1661; C1662	Power supply circuit fault Battery charging circuit fault	Ensure ABS ECM connector is secure. Disconnect ABS ECM connector and proceed to pinpoint test 1:

Pinpoint Tests

	Test	Result	Action
1	Check cable and terminal integrity:	OK	Proceed to test 2
	- ABS ECM connector pin 16 and Ground pin 24	Faulty	Rectify fault, proceed to test 5
2	Check the cable for continuity:	OK	Proceed to test 3
	- ABS ECM connector pin 24 and Ground	Faulty	Rectify wiring harness fault, proceed to test 5
3	Check battery voltage: With ignition 'ON', Check the voltage between:	Voltage greater than 10 V	Proceed to test 4
	- ABS ECM connector pin 16 and Ground pin 24	Voltage less than 10 V	Locate and rectify fault, proceed to test 5
4	Check battery voltage: Reconnect ABS ECM connector and start the engine, Check the voltage between:	Voltage between 10 V and 16 V	Proceed to test 4
	- Battery positive (red) terminal and negative (black) terminal	Voltage greater than 16 V	Check the battery charging circuit. Locate and rectify fault, proceed to test 5
5	Clear fault code and test ABS to verify fault cleared	OK	Action complete - quit test
		Fault still present	Contact Triumph service

Circuit Diagram

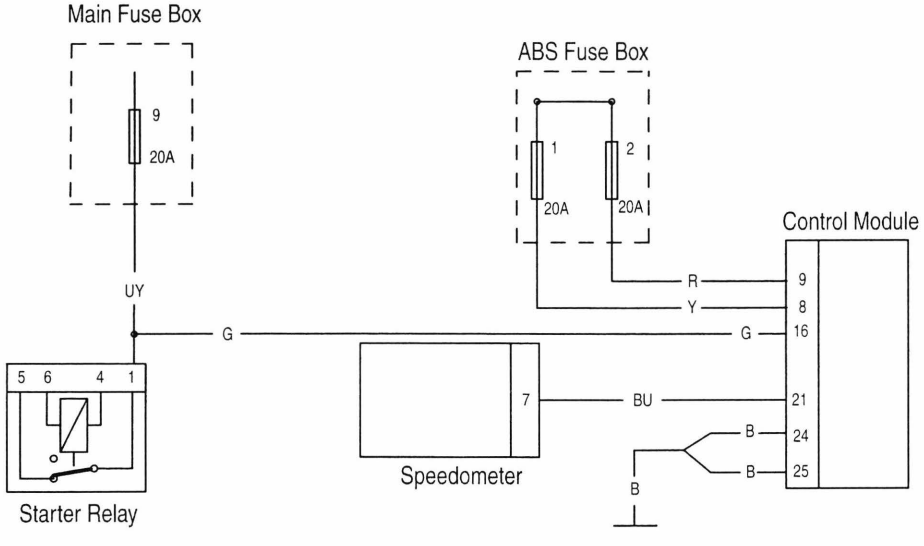

Different Tyre Diameter - Rocket III Touring ABS and Rocket III Roadster

Fault Code	Possible cause	Action
C1671	Incorrect diameter wheels installed Incorrect tyre pressures Incorrect wheel speed sensor air gap Damaged or dirty pulser ring	Ensure ABS ECM connector is secure. Proceed to pinpoint test 1:

Pinpoint Tests

	Test	Result	Action
1	Check for installation of wheels and tyres of the correct size	OK	Proceed to test 2
		Faulty	Rectify fault, proceed to test 5
2	Check the tyre pressures	OK	Proceed to test 3
		Faulty	Rectify fault, proceed to test 5
3	Check the pulser ring for damage or contamination by road grime or ferrous metal filings	OK	Proceed to test 4
		Faulty	Clean or replace the ABS pulser ring, proceed to test 5
4	Measure the air gap of the front wheel speed sensor between the sensor and the pulser ring: - Air gap between 0.1 mm to 1.5 mm	OK	Proceed to test 5
		Faulty	Rectify the fault and proceed to test 5
5	Clear fault code and test ABS to verify fault cleared	OK	Action complete - quit test
		Fault still present	Contact Triumph service

Abnormal ECU - Rocket III Touring ABS and Rocket III Roadster

Fault Code	Possible cause	Action
C1681	Incorrect Wheel speed sensor air gap Damaged or dirty pulser ring Loose or incorrectly installed wheel speed sensor	Ensure ABS ECM connector is secure. Proceed to pinpoint test 1:

Pinpoint Tests

	Test	Result	Action
1	Measure the air gap of the wheel speed sensors between the sensor and the pulser ring: - Air gap between 0.1 mm to 1.5 mm	OK	Proceed to test 1
		Faulty	Rectify the fault and proceed to test 4
2	Check the pulser rings for damage or contamination by road grime or ferrous metal filings	OK	Proceed to test 2
		Faulty	Clean or replace the ABS pulser ring, proceed to test 4
3	Check the wheel speed sensors for correct installation, and the fixings for correct torque	OK	Proceed to test 4
		Faulty	Rectify the fault and proceed to test 4
4	Clear fault code and test ABS to verify fault cleared	OK	Action complete - quit test
		Fault still present	Contact Triumph service

ABS Hydraulic Circuit Layout - Rocket III Touring ABS and Rocket III Roadster

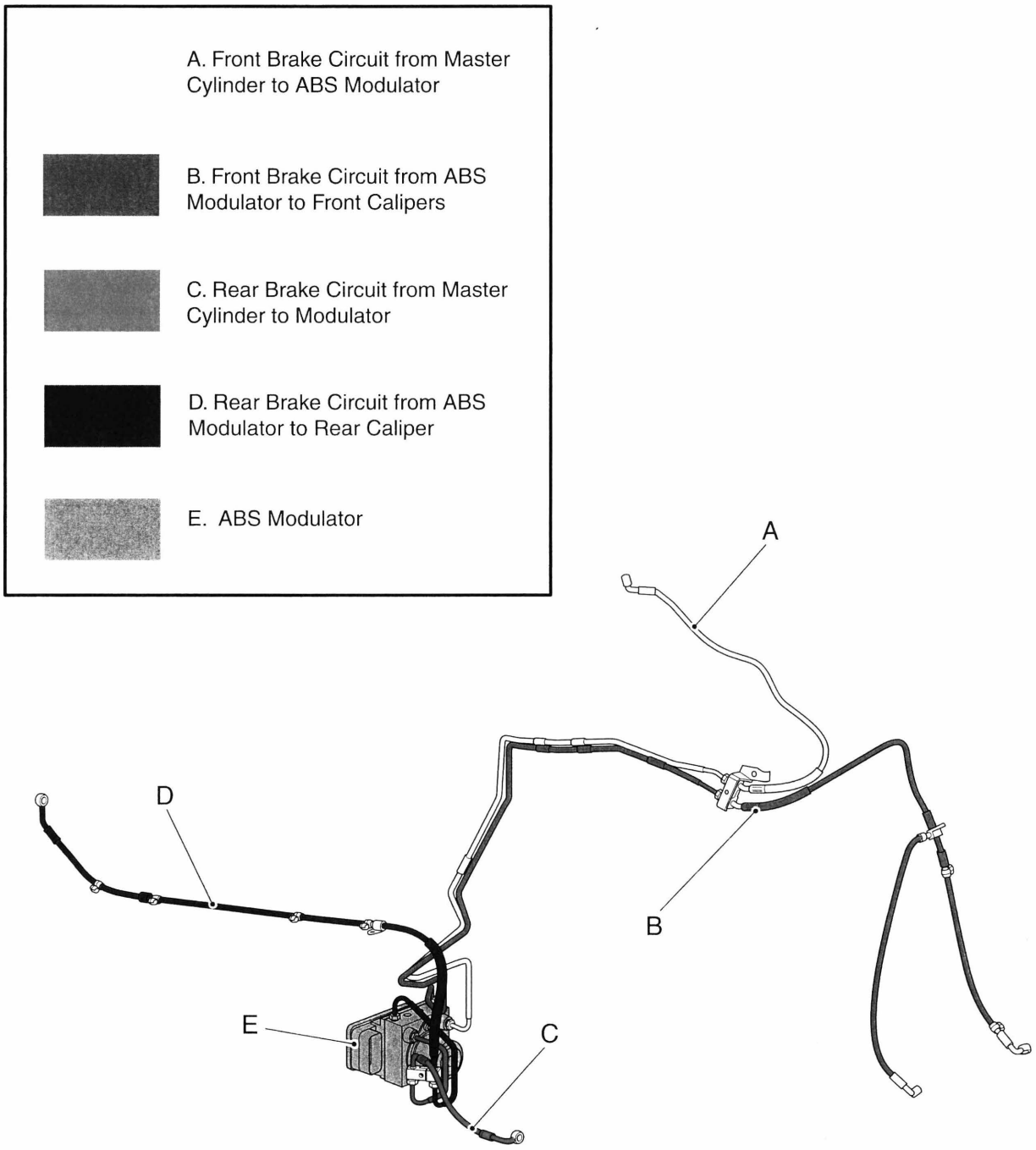

16 Wheels/Tyres

Table of Contents

Exploded view - Front Wheel - Rocket III, Classic and Roadster 16.2

Exploded View - Rear Wheel and Cush Drive - Rocket III, Classic and Roadster 16.3

Exploded view - Front Wheel - Rocket III Touring 16.4

Exploded View - Rear Wheel and Cush Drive - Rocket III Touring 16.5

Tyres 16.6

- Tyre Pressures 16.6
- Tyre Wear/Wheel Inspection 16.6
- Minimum Recommended Tread Depth 16.7
- Important Tyre Information 16.7

Front Wheel - Rocket III, Classic and Roadster 16.8

- Removal 16.8
- Installation 16.9

Front Wheel - Rocket III Touring 16.10

- Removal 16.10
- Installation 16.11

Front Wheel Bearing 16.11

- Removal 16.11
- Inspection 16.12
- Installation 16.12

Rear Wheel - Rocket III, Classic and Roadster 16.13

- Removal 16.13
- Installation 16.14

Rear Wheel - Rocket III Touring 16.15

- Removal 16.15
- Installation 16.17

Cush Drive 16.18

- Removal 16.18
- Installation 16.19

Rear Wheel Bearing 16.20

- Removal 16.20
- Inspection 16.20
- Installation 16.21

Exploded view - Front Wheel - Rocket III, Classic and Roadster

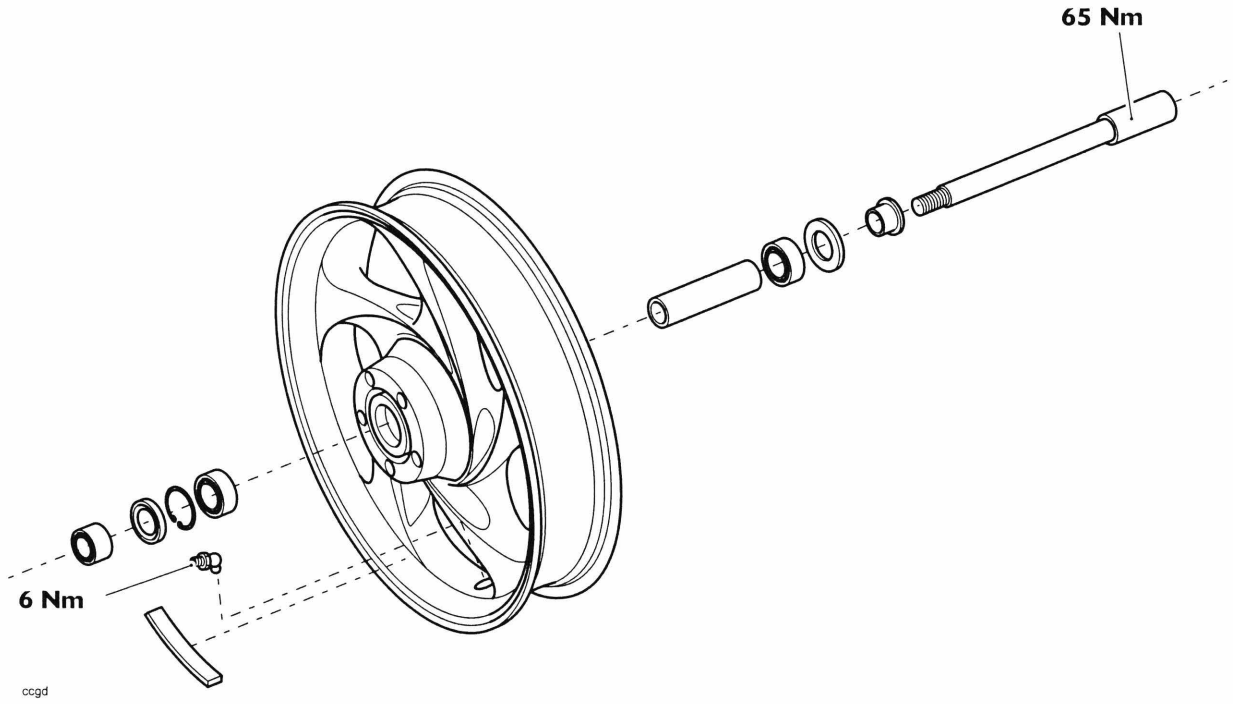

Exploded View - Rear Wheel and Cush Drive - Rocket III, Classic and Roadster

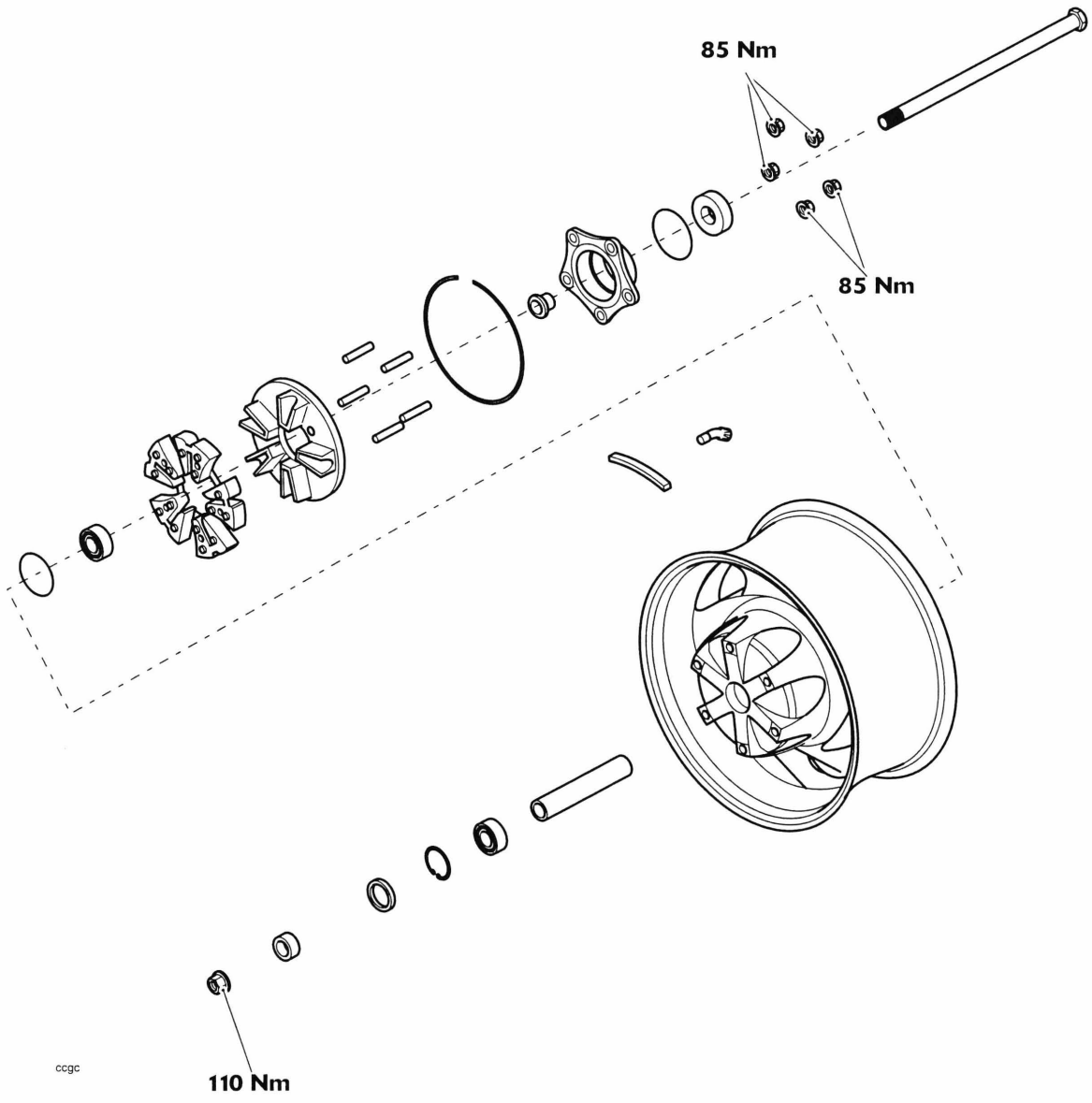

Exploded view - Front Wheel - Rocket III Touring

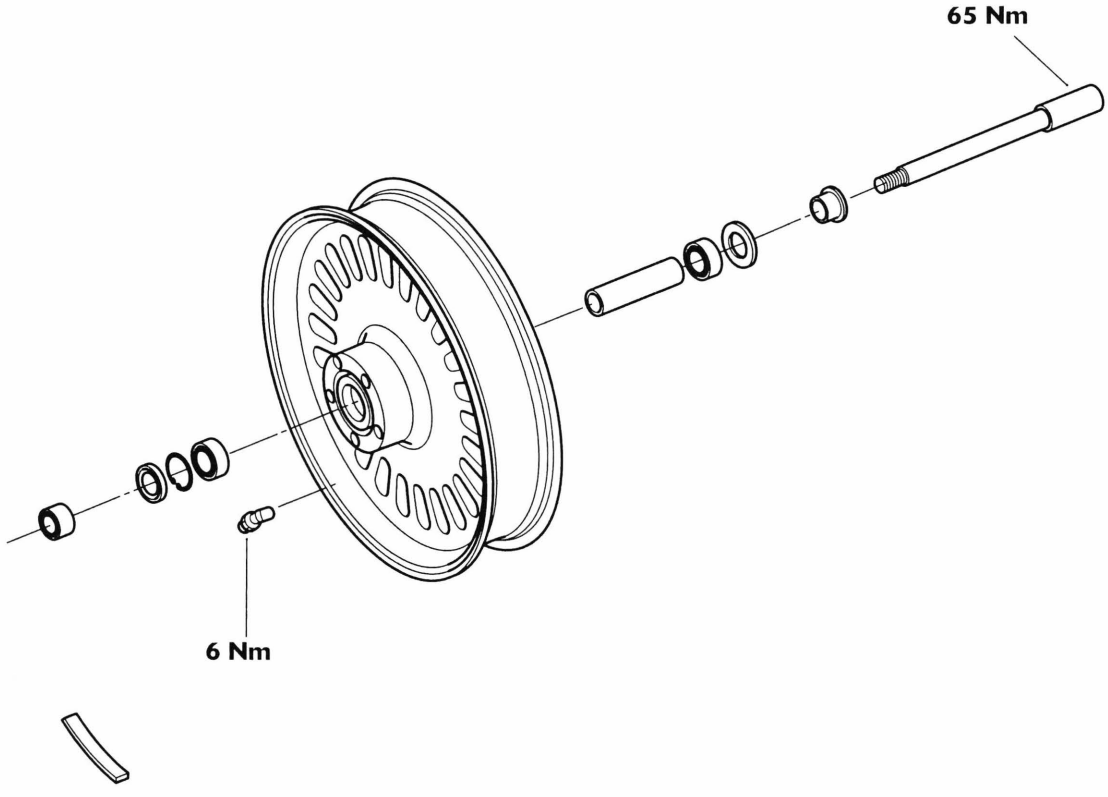

aaym

Exploded View - Rear Wheel and Cush Drive - Rocket III Touring

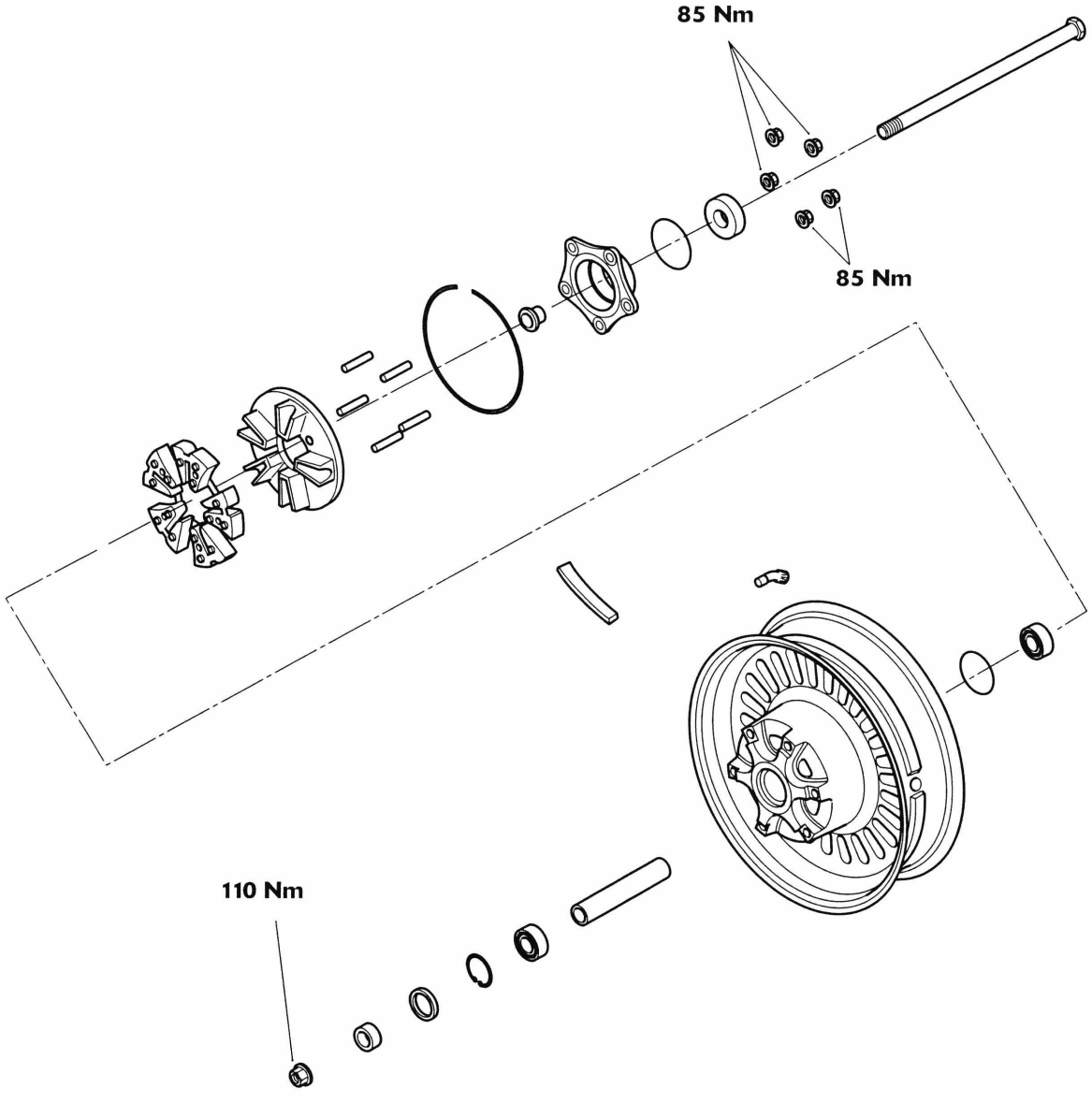

Tyres

This model is equipped with tubeless tyres, valves, and wheel rims. Only tyres marked 'TUBELESS' and tubeless type tyre valves mounted on rims marked 'SUITABLE FOR TUBELESS TYRES' or 'FOR TUBELESS' can be used.

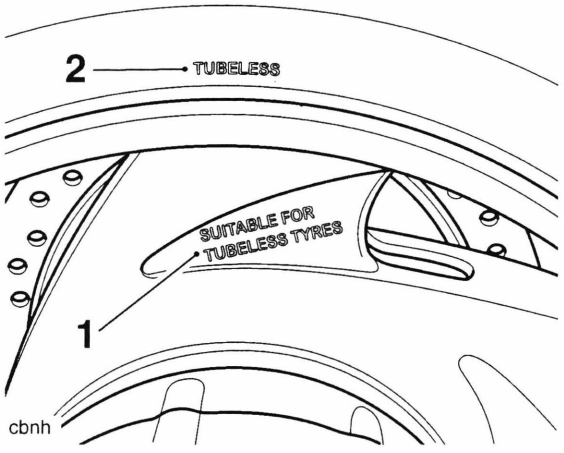

1. **Wheel marking**
2. **Tyre marking**

Warning

Tyres that have been used on a rolling road dynamometer may become damaged. In some cases, the damage may not be visible on the external surface of the tyre. Tyres must be replaced after such use as continued use of a damaged tyre may lead to instability, loss of motorcycle control and an accident.

Tyre Pressures

The correct tyre pressures for Rocket III are shown in the table below. The tyre pressures must always be checked and adjusted when the tyres are cold.

Loading condition	Front	Rear
Rider only (Rocket III, Classic, and Roadster)	2.34 bar (34 lb/in^2)	2.90 bar (42 lb/in^2)
Rider, passenger and luggage (Rocket III, Classic, and Roadster)	2.34 bar (34 lb/in^2)	2.90 bar (42 lb/in^2)
Rider only (Rocket III Touring)	2.48 bar (36 lb/in^2)	2.90 bar (42 lb/in^2)
Rider, passenger and luggage (Rocket III Touring)	2.48 bar (36 lb/in^2)	2.90 bar (42 lb/in^2)

Warning

Correct tyre inflation pressures will provide maximum stability, rider comfort and tyre life. Tyre pressures must be checked according to the scheduled maintenance chart, when the tyres are cold, and adjusted as necessary.

Incorrect tyre inflation pressures will cause abnormal tread wear and instability problems that may lead to loss of motorcycle control and an accident. Under-inflation may result in the tyre slipping on, or coming off the rim. Over-inflation will cause instability and accelerated tread wear. Both conditions are dangerous as they may cause loss of motorcycle control and an accident.

Tyre Wear/Wheel Inspection

As the tyre tread wears down, the tyre becomes more susceptible to puncture and failure. It is estimated that 90% of all tyre failures occur during the last 10% of tread life (90% worn). It is false economy and unsafe to use tyres until they are worn to their minimum.

All tyres are fitted with tread wear indicators. When the tyre becomes worn down as far as the top of a tread wear indicator, the tyre is worn beyond its service life and must be replaced. Attention must also be paid to the legal limits for tread wear, which differ from country to country. Tyres that have worn to the legal limit in the country or region in which the motorcycle is operated must be replaced, even if tread wear has not yet reached the level of the tread wear indicators.

In accordance with the scheduled maintenance chart, measure the depth of the tread with a depth gauge, and replace any tyre that has worn to, or beyond the minimum allowable tread depth.

Inspect wheels for cracks, splits and kerb damage. Always replace wheels that are suspected of having become damaged.

Warning

Operation with excessively worn tyres is hazardous and will adversely affect traction, stability and handling which may lead to loss of motorcycle control or an accident.

When tubeless tyres become punctured, leakage is often very slow. Always inspect tyres very closely for punctures. Check the tyres for cuts, embedded nails or other sharp objects. Check the rims for dents or deformation. Operation with damaged or defective wheels or tyres is dangerous and loss of motorcycle control or an accident could result. Always consult your Triumph dealer for tyre replacement, or for a safety inspection of the tyres.

Minimum Recommended Tread Depth

In accordance with the periodic maintenance chart, measure the depth of the tread with a depth gauge, and replace any tyre that has worn to, or beyond the minimum legally allowable tread depth specified below:

Speed	Minimum Tread Depth
Under 130 km/h (80 mph)	2 mm (0.08 in)
Over 130 km/h (80 mph)	Rear 3 mm (0.12 in) Front 2 mm (0.08 in)

Warning

Triumph motorcycles must not be operated above the legal road speed limit except in authorised closed-course conditions.

Warning

Only operate this Triumph motorcycle at high speed in closed-course on-road competition or on closed-course race tracks. High-speed operation should only then be attempted by riders who have been instructed in the techniques necessary for high speed riding and are familiar with the motorcycle's characteristics in all conditions. High-speed operation in any other circumstances is dangerous and may lead to loss of motorcycle control and an accident.

Important Tyre Information

All Triumph motorcycles are carefully and extensively tested in a range of riding conditions to ensure that the most effective tyre combinations are approved for use on each model. It is essential that approved tyre combinations are used when purchasing replacement tyres as the use of non approved tyres or approved tyres in non approved combinations may lead to motorcycle instability. Always refer to the owner's handbook Data section for details of approved tyres and tyre combinations.

Warning

If a tyre sustains a puncture, the tyre must be replaced. Failure to replace a punctured tyre, or operation with a repaired tyre can lead to instability, loss of control or an accident.

Warning

Never use an inner tube to repair a punctured tyre. The rough surface inside the tyre can chafe the tube leading to instability, rapid deflation, loss of motorcycle control and an accident.

Warning

Do not install tube-type tyres on tubeless rims. The bead will not seat and the tyres could slip on the rims, causing tyre deflation that may result in a loss of motorcycle control and an accident.

Warning

The use of tyres other than those listed in the Specification section of the owner's handbook may adversely affect handling leading to loss of motorcycle control or an accident. Use the recommended tyre options only in the combinations given in the owner's handbook. Do not mix tyres from different manufacturers or tyres from the same manufacturer but from another option.

Warning

Accurate wheel balance is important for safe, stable handling of the motorcycle. Do not remove or change any wheel balance weights. Incorrect wheel balance may cause instability leading to loss of motorcycle control and an accident.

When wheel balancing is required, such as after tyre replacement, see your authorised Triumph dealer.

Only use self-adhesive weights. Clip-on weights will damage the wheel and tyre potentially resulting in tyre deflation, loss of motorcycle control and an accident.

Warning

When replacement tyres are required, consult your authorised Triumph dealer who will arrange for the tyres to be fitted according to the tyre manufacturers instructions.

When tyres are replaced, allow time for the tyre to seat itself to the rim (approximately 24 hours). During this seating period, ride cautiously as an incorrectly seated tyre could cause loss of motorcycle control or an accident. Initially, the new tyre will not produce the same handling characteristics as the worn tyre and the rider must allow adequate riding distance (approximately 100 miles) to become accustomed to the new handling characteristics.

After both 24 hours and 100 miles, the tyre pressures should be checked and adjusted and the tyre examined for correct seating and rectified as necessary.

Use of a motorcycle when not accustomed to its handling characteristics, with incorrect tyre pressures or an incorrectly seated tyre is dangerous and may lead to loss of motorcycle control and an accident.

Front Wheel - Rocket III, Classic and Roadster

Removal

Warning

Before starting work, ensure the motorcycle is stabilised and adequately supported. This will help prevent it from falling and causing injury to the operator or damage to the motorcycle.

1. Raise and support the front of the motorcycle.
2. Detach both brake calipers.

Note:

- **It is not necessary to disconnect the brake hoses.**

Warning

Do not allow the calipers to hang on the brake hoses as this may damage the hoses. Damaged hoses could cause brake failure leading to loss of control and an accident.

3. Slacken both pinch bolts at the lower end of the left hand fork.

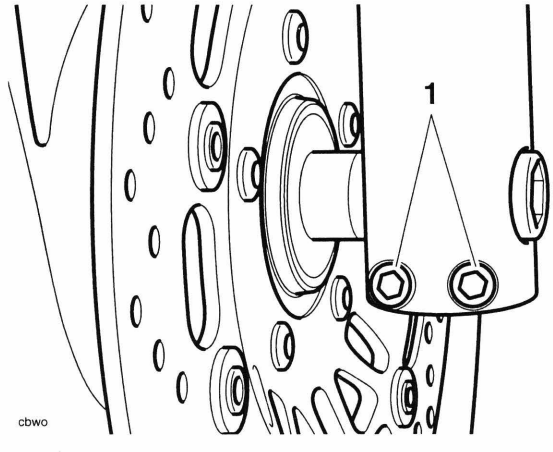

1. Fork pinch bolts

4. Release and remove the wheel spindle which is threaded into the right hand fork.

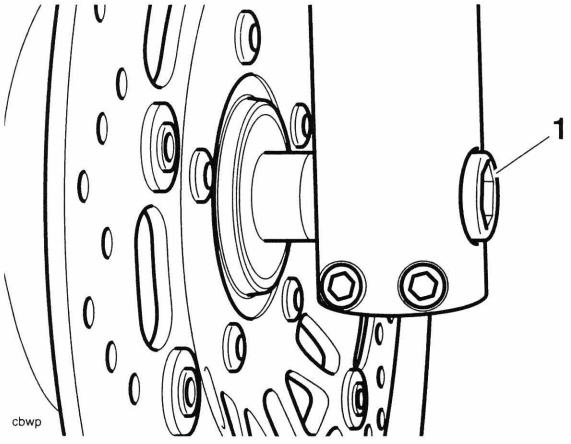

1. Wheel spindle

5. Remove the wheel, recovering the spacers from the left hand and right hand sides.

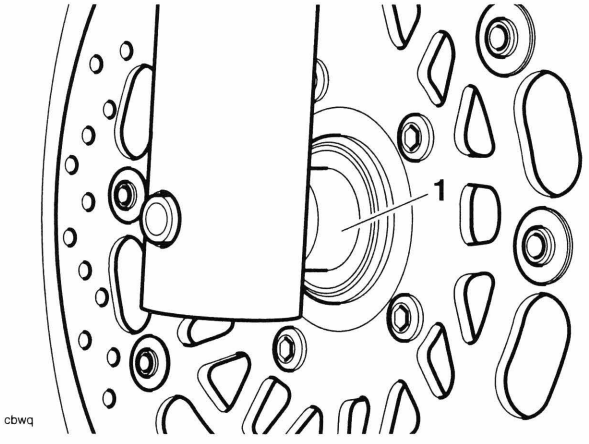

1. Spacer

6. Place the wheel on wooden blocks to prevent damage to the brake discs.

Warning

Do not allow the wheel to rest on either brake disc as this may damage the disc leading to loss of motorcycle control and an accident.

Caution

To prevent wheel and wheel bearing damage, ensure dirt and debris are not allowed to enter the wheel bearings.

7. Thoroughly clean all components and inspect for wear or damage.

Installation

1. Lightly smear the spacers with grease and locate in to the left hand and the right hand sides of the hub.

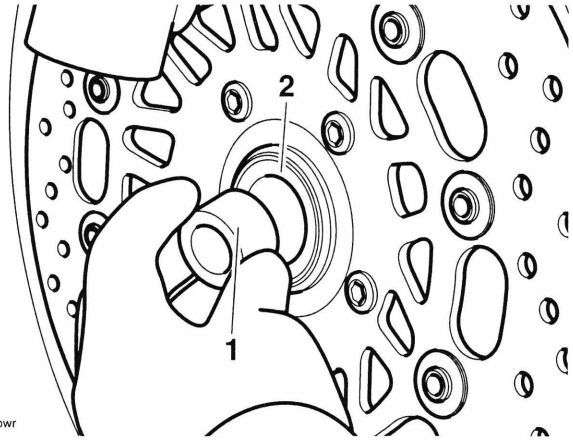

1. Spacer
2. Hub

2. Position the wheel between the forks.
3. Raise the wheel until it is in alignment with the spindle holes in both forks. Take care to not dislodge the spacer.
4. Refit the wheel spindle from the left hand side and tighten to **65 Nm**.
5. Check that the brake disc is centrally located to the caliper on the left hand side. If not, apply gentle pressure to the fork to ensure the disc is centred with the caliper.
6. Maintaining the above position, tighten the fork pinch bolts to **22 Nm**.
7. Thoroughly clean and degrease the brake discs.
8. Fit the brake calipers, tightening the mounting bolts to **50 Nm**.
9. Check the operation of the front brake. Rectify as necessary.

Warning

It is dangerous to operate the motorcycle with defective brakes; you must have your authorised Triumph dealer take remedial action before you attempt to ride the motorcycle again. Failure to take remedial action may reduce braking efficiency leading to loss of motorcycle control and an accident.

Front Wheel - Rocket III Touring

Removal

Warning

Before starting work, ensure the motorcycle is stabilised and adequately supported. This will help prevent it from falling and causing injury to the operator or damage to the motorcycle.

1. Raise and support the front of the motorcycle.
2. Detach and support both brake calipers.

Note:

- **It is not necessary to disconnect the brake hoses.**

Warning

Do not allow the calipers to hang on the brake hoses as this may damage the hoses. Damaged hoses could cause brake failure leading to loss of control and an accident.

3. Slacken both pinch bolts at the lower end of the right hand fork.

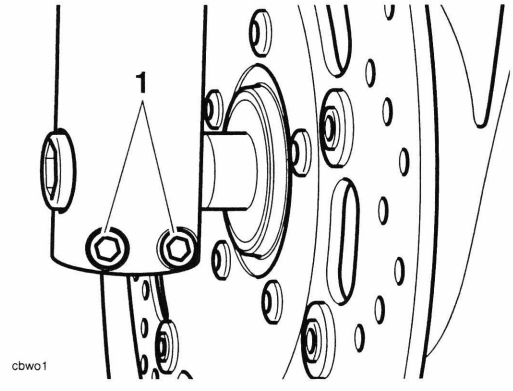

1. Fork pinch bolts

4. Working from the right hand side, release and remove the wheel spindle which is threaded into the left hand fork.

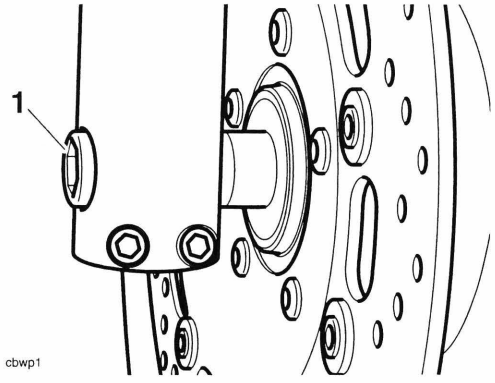

1. Wheel spindle

5. Remove the wheel, recovering the spacer from the left hand side.

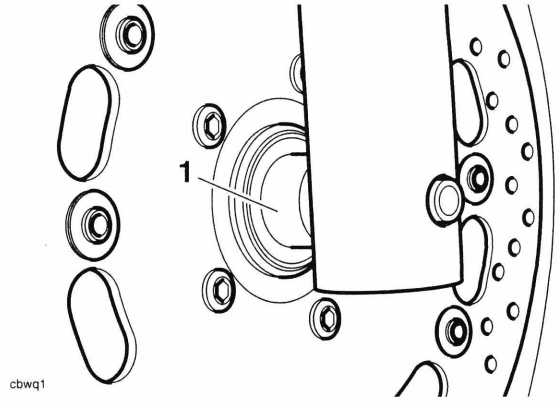

1. Spacer

6. Place the wheel on wooden blocks to prevent damage to the brake discs.

Warning

Do not allow the wheel to rest on either brake disc as this may damage the disc leading to loss of motorcycle control and an accident.

Caution

To prevent wheel and wheel bearing damage, ensure dirt and debris are not allowed to enter the wheel bearings.

7. Thoroughly clean all components and inspect for wear or damage.

Installation

1. Lightly smear the spacers with grease and locate in to the left hand and right hand sides of the hub.

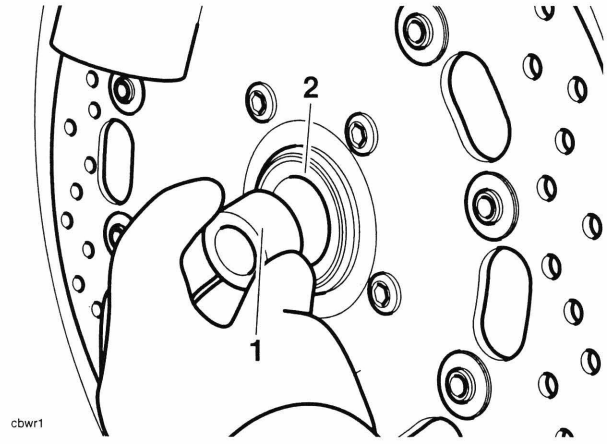

cbwr1

1. Spacer
2. Hub

2. Position the wheel between the forks.
3. Raise the wheel until it is in alignment with the spindle holes in both forks. Take care to not dislodge the spacer.
4. Refit the wheel spindle from the right hand side and tighten to **65 Nm**.
5. Check that the brake disc is centrally located to the caliper on the right hand side. If not, apply gentle pressure to the fork to ensure the disc is centred with the caliper.
6. Maintaining the above position, tighten the fork pinch bolts to **22 Nm**.
7. Thoroughly clean and degrease the brake discs.
8. Fit the brake calipers, tightening the mounting bolts to **50 Nm**.
9. Check the operation of the front brake. Rectify as necessary.

⚠ Warning

It is dangerous to operate the motorcycle with defective brakes and you must have your authorised Triumph dealer take remedial action before you attempt to ride the motorcycle again. Failure to take remedial action may reduce braking efficiency leading to loss of motorcycle control and an accident.

Front Wheel Bearing

Removal

1. Remove the front wheel (see page *16-8* for Rocket III and Classic or *16-10* for Rocket III Touring).

⚠ Warning

To avoid wheel damage, always support the wheel as instructed below. A dangerous riding condition leading to loss of motorcycle control and an accident could result if this warning is ignored.

2. Support the wheel on blocks as illustrated.

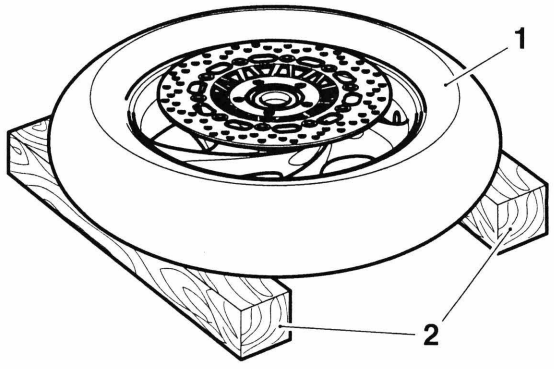

cbzh

1. Wheel
2. Support block

3. Remove and discard the seals and the bearing circlip.

⚠ Warning

Always wear eye, hand and face protection when using a drift as use of a hammer and drift can cause bearings to fragment. Pieces of fragmented bearing could cause eye and hand injuries if suitable protective apparel is not worn.

⚠ Caution

To prevent wheel damage and to aid bearing removal, always apply force evenly on both sides of the bearing to prevent it from 'tipping' and becoming stuck. Application of uneven force will lead to difficulty in removing the bearing and to a damaged wheel.

4. Using a suitable pin punch, through the centre of the wheel, drift out the wheel bearings. Collect the centre sleeve.

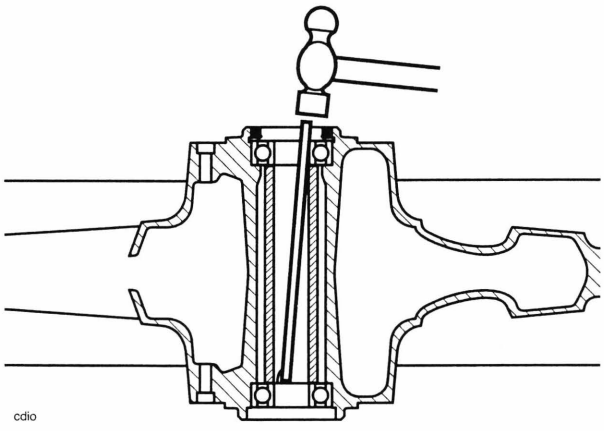

Wheel Bearing Removal

Inspection

Warning

Only remove raised witness marks from within the wheel. Removal of material below any raised areas will reduce the level of interference between the wheel and the bearings. Loss of interference could cause the bearing to become loose in the wheel leading to loss of motorcycle control and an accident.

1. Examine the wheel for any raised witness marks caused by the removal process. Remove any such marks with fine emery paper or a gentle file.

Installation

Note:

- **Refer to the chart below for the correct tool and tool face when inserting bearings. Bearings are inserted by means of a draw-bolt acting on the insertion tool. A support tool is located on the opposite side of the wheel to the insertion tool and as the bolt is tightened, the bearing is drawn in to the wheel.**
- **Insert bearings with the marked or shielded side facing outwards and always fit a new bearing circlip and seals.**

	Bearing insertion tool	Support tool
Left bearing	3880070-T0310 Small face to bearing	3880075-T0310 Large face to wheel
Right bearing	3880070-T0310 Small face to bearing	3880075-T0310 Large face to wheel

1. Fit the wheel bearings and centre sleeve using the method described above.

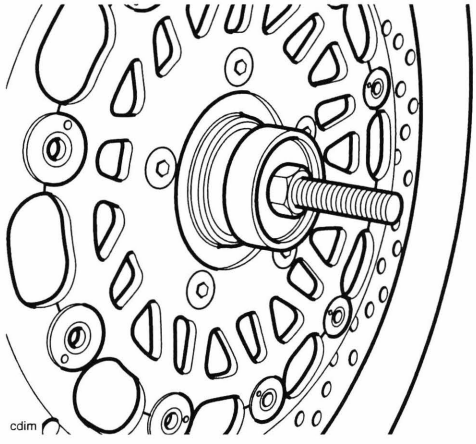

Tool 3880070 in Position on Wheel

2. Fit a new circlip.
3. Lubricate and fit new seals to the front wheel. Lubricate the seal's knife-edge with grease to NLGI 2 specification.
4. Fit the front wheel (see page *16-9* for Rocket III and Classic, see page *16-11* for Rocket III Touring).

Rear Wheel - Rocket III, Classic and Roadster

Removal

Warning

Before starting work, ensure the motorcycle is stabilised and adequately supported. This will help prevent it from falling and causing injury to the operator or damage to the motorcycle.

1. Raise and support the rear of the motorcycle.
2. Release the wheel spindle nut and withdraw the spindle to a point where it clears the caliper carrier.

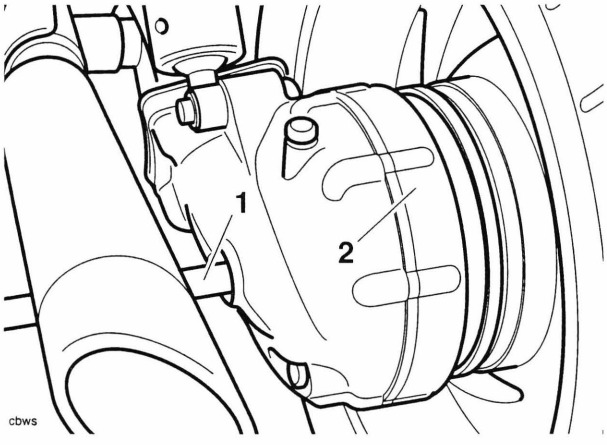

1. Wheel spindle
2. Bevel box

3. Release the torque reaction bolt from the caliper carrier and discard.

Warning

Do not allow the caliper to hang on the brake hoses as this may damage the hoses and could lead to reduced brake efficiency causing loss of motorcycle control and an accident.

4. As an assembly, manoeuvre the caliper and carrier until it is clear of the brake disc and wheel, collecting the spacer once it is freed from the caliper carrier.

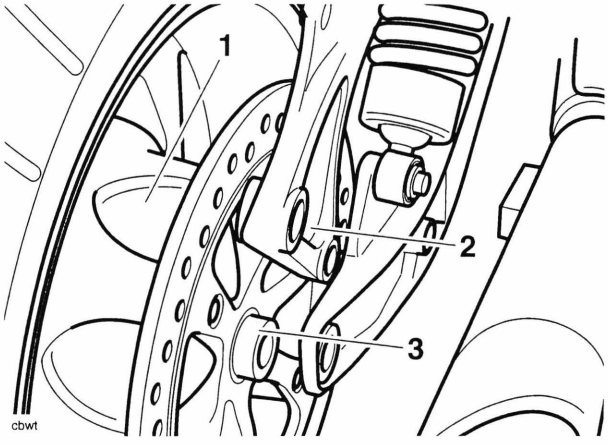

1. Wheel
2. Caliper carrier
3. Spacer

Note:

- **Rest the caliper assembly on a support such that it is not allowed to hang on the brake hose.**

5. Withdraw the wheel spindle completely.
6. Gently pull the wheel towards the right hand side of the motorcycle to release it from the bevel box.

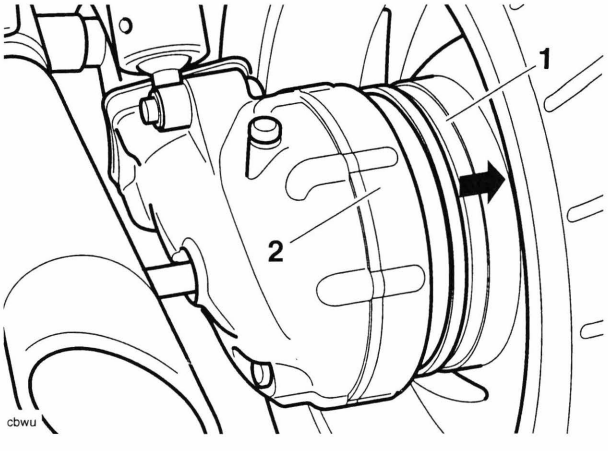

1. Wheel
2. Bevel box

7. Manoeuvre the wheel clear of the swinging arm.
8. Place the wheel on wooden blocks with the brake disc uppermost.

Installation

1. Thoroughly clean and degrease the brake disc.
2. Apply grease to NLGI 2 specification to the wheel driven flange.
3. Position the wheel within the swinging arm.
4. Raise the wheel and engage the driven flange with the bevel box. Once the splines are engaged, push the wheel fully home.

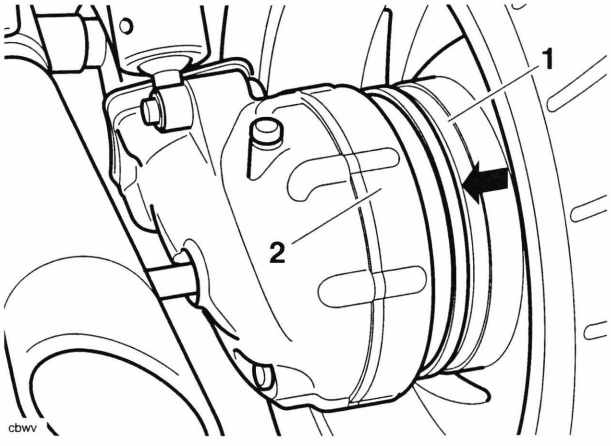

1. Wheel
2. Bevel box

5. Fit the wheel spindle, pushing it through the wheel centre sufficient to support the wheel without preventing fitment of the spacer and caliper carrier.

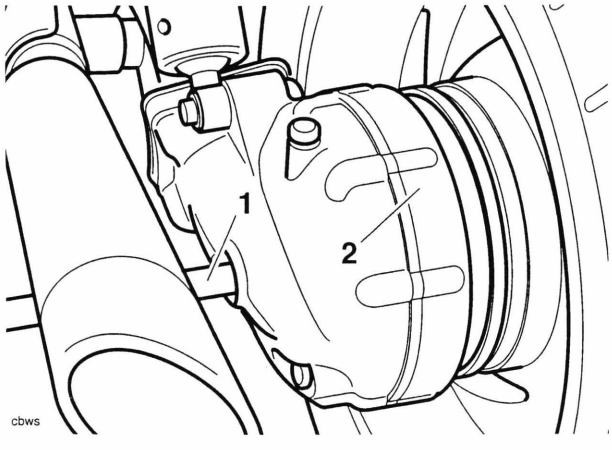

1. Wheel spindle
2. Bevel box

6. Position the caliper and carrier over the disc ensuring both brake pads are correctly aligned either side of the disc.
7. Position the spacer between the wheel and caliper carrier.

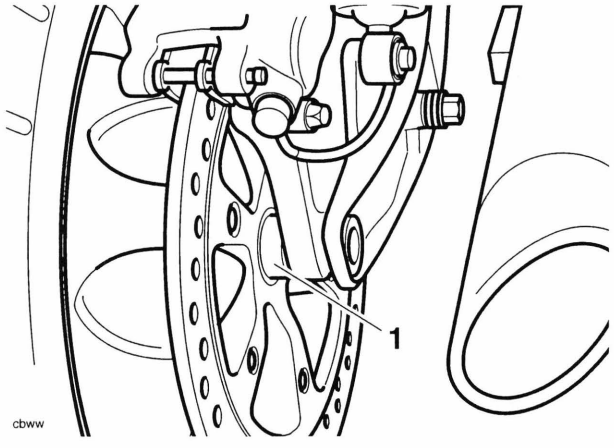

1. Spacer

8. Align the caliper carrier with the wheel spindle, spacer and swinging arm. Once in alignment, push the wheel spindle through the caliper carrier.
9. Align the caliper carrier to the torque reaction fixing point. Once in alignment, fit a new torque reaction bolt.
10. Tighten the wheel spindle nut to **110 Nm** and the torque reaction bolt to **69 Nm**.

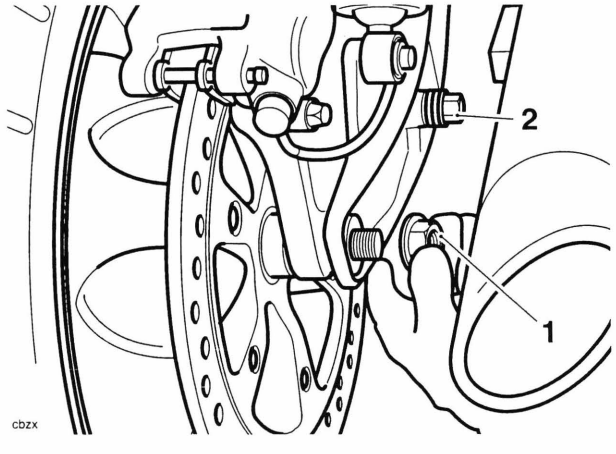

1. Wheel spindle nut
2. Torque reaction bolt

11. Pump the brake pedal to correctly position the caliper pistons.
12. Check the operation of the rear brake. Rectify as necessary.

⚠ Warning

It is dangerous to operate the motorcycle with defective brakes and you must have your authorised Triumph dealer take remedial action before you attempt to ride the motorcycle again. Failure to take remedial action may reduce braking efficiency leading to loss of motorcycle control and an accident.

Rear Wheel - Rocket III Touring

Removal

⚠ Warning

Before starting work, ensure the motorcycle is stabilised and adequately supported. This will help prevent it from falling and causing injury to the operator or damage to the motorcycle.

1. Raise and support the rear of the motorcycle.
2. Open the pannier lid.
3. Turn the pannier quick release fixings 90° anti-clockwise and remove the pannier.

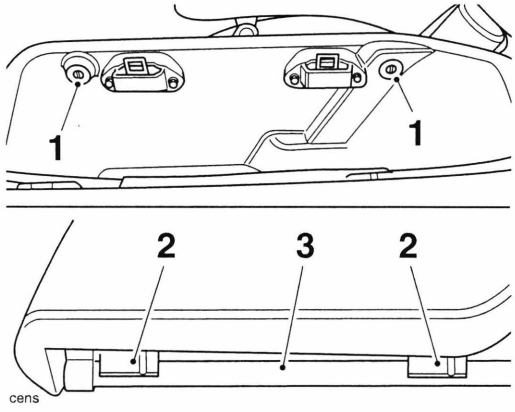

1. Quick release fixings
2. Pannier lower mountings
3. Pannier rail

4. Release the pannier rail link fixings and remove the pannier rail link.

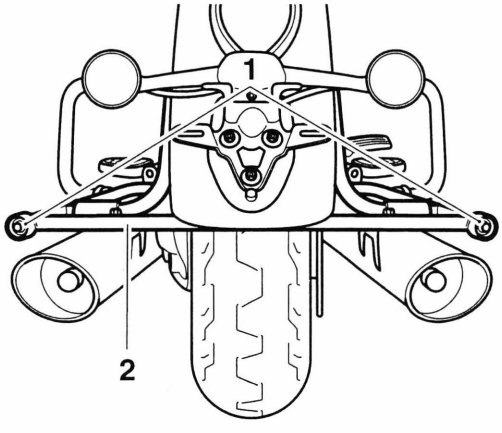

1. Pannier rail link fixings
2. Pannier rail link

5. Remove both silencers (see page *11-182*).

6. Release the wheel spindle nut and withdraw the spindle to a point where it clears the caliper carrier.

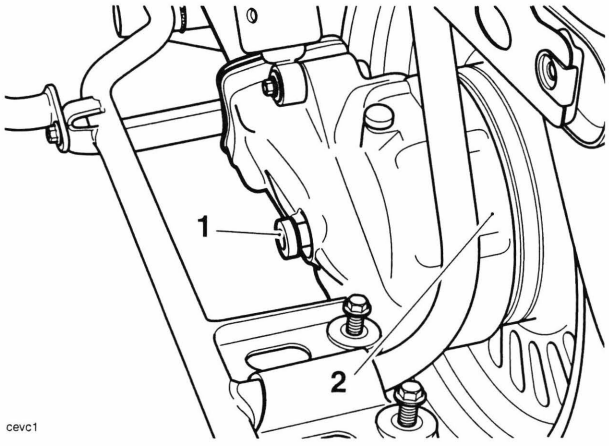

1. Wheel spindle
2. Bevel box

7. Release the torque reaction bolt from the caliper carrier.

Warning

Do not allow the caliper to hang on the brake hoses as this may damage the hoses and could lead to reduced brake efficiency causing loss of motorcycle control and an accident.

8. As an assembly, manoeuvre the caliper and carrier until it is clear of the brake disc and wheel, collecting the spacer once it is freed from the caliper carrier.

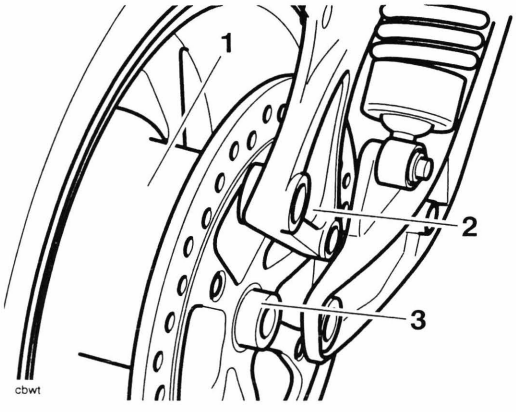

1. Wheel
2. Caliper carrier
3. Spacer

Note:

- **Rest the caliper assembly on a support such that it is not allowed to hang on the brake hose.**

9. Withdraw the wheel spindle completely.
10. Gently pull the wheel towards the right hand side of the motorcycle to release it from the bevel box.

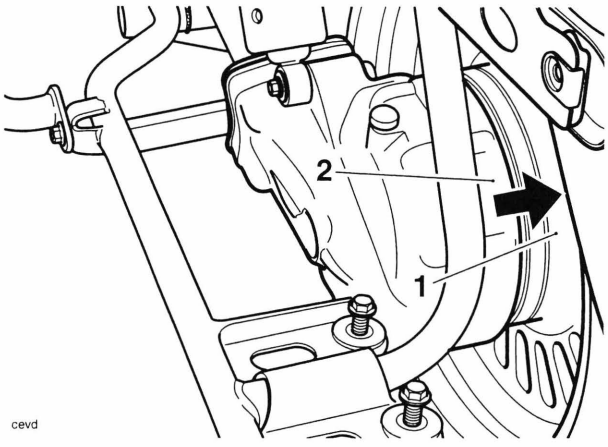

1. Wheel
2. Bevel box

11. Manoeuvre the wheel clear of the swinging arm.
12. Place the wheel on wooden blocks with the brake disc uppermost.

Installation

1. Thoroughly clean and degrease the brake disc.
2. Apply grease to NLGI 2 specification to the wheel driven flange.
3. Position the wheel within the swinging arm.
4. Raise the wheel and engage the driven flange with the bevel box. Once the splines are engaged, push the wheel fully home.

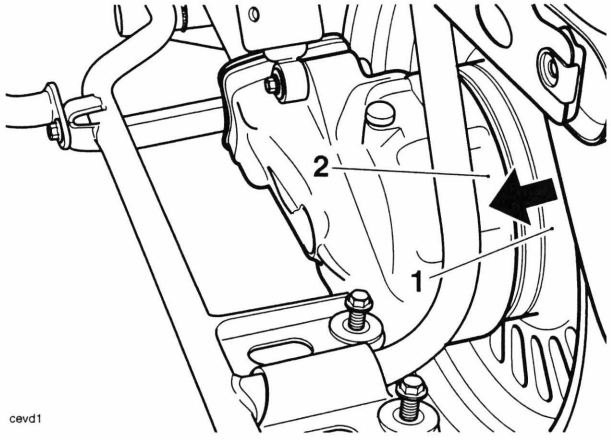

1. Wheel
2. Bevel box

5. Fit the wheel spindle, pushing it through the wheel centre sufficient to support the wheel without preventing fitment of the spacer and caliper carrier.

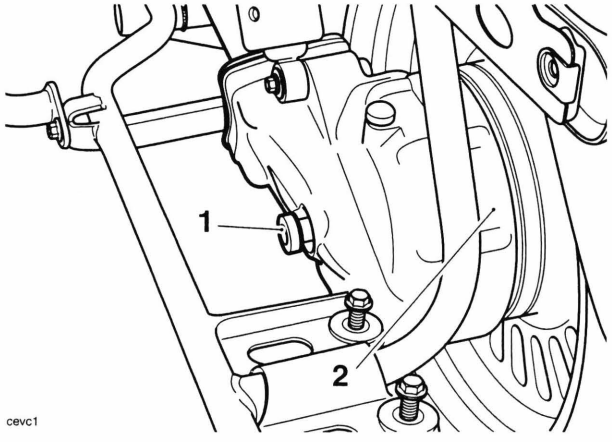

1. Wheel spindle
2. Bevel box

6. Position the caliper and carrier over the disc ensuring both brake pads are correctly aligned either side of the disc.
7. Position the spacer between the wheel and caliper carrier.

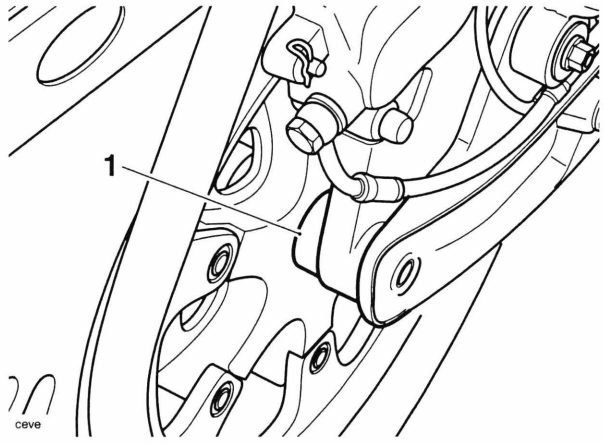

1. Spacer

8. Align the caliper carrier with the wheel spindle, spacer and swinging arm. Once in alignment, push the wheel spindle through the caliper carrier.
9. Align the caliper carrier to the torque reaction fixing point. Once in alignment, fit a new torque reaction bolt.
10. Tighten the wheel spindle nut to **110 Nm** and the torque reaction bolt to **69 Nm**.

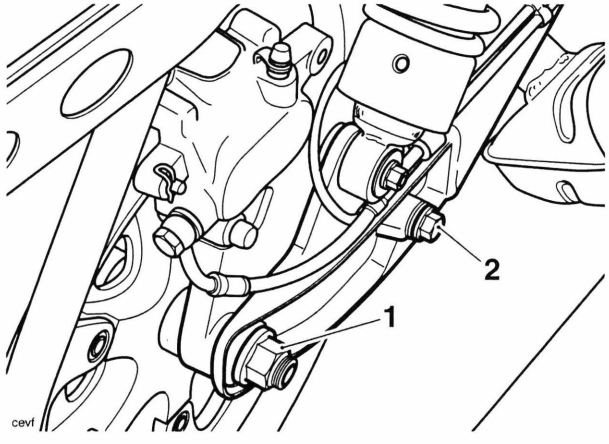

1. Wheel spindle nut
2. Torque reaction bolt

11. Pump the brake pedal to correctly position the caliper pistons.
12. Check the operation of the rear brake. Rectify as necessary.

Warning

It is dangerous to operate the motorcycle with defective brakes and you must have your authorised Triumph dealer take remedial action before you attempt to ride the motorcycle again. Failure to take remedial action may reduce braking efficiency leading to loss of motorcycle control and an accident.

13. Refit both silencers (see page *11-185*).
14. Position the pannier rail link. Fit the pannier rail link fixings and tighten to **22 Nm**.
15. Align the pannier lower mountings to the pannier rail.
16. Align the two upper quick release fixings to the pannier rail.
17. Turn the quick release fixings 90° clockwise to the locked position.

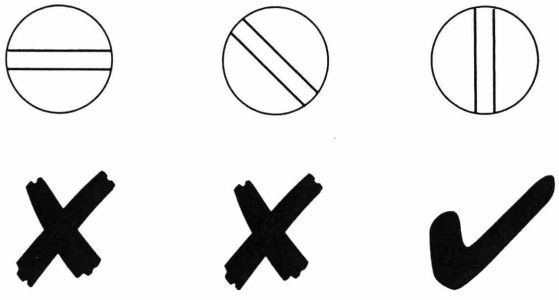

Pannier Quick Release Fixings Correctly Locked

Warning

Always ensure the panniers are secure and the quick release fixings are locked. A loose or detached pannier could cause loss of motorcycle control and an accident.

Cush Drive

Removal

Warning

Before starting work, ensure the motorcycle is stabilised and adequately supported. This will help prevent it from falling and causing injury to the operator or damage to the motorcycle.

1. Remove the rear wheel (see page *16-10* for Rocket III, Classic and Roadster, see page *16-15* for Rocket III Touring).
2. Release the circlip securing the driven flange assembly to the wheel centre.
3. Discard the circlip.

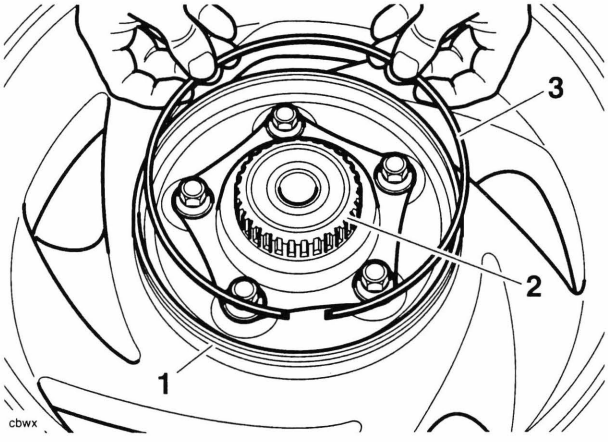

1. **Wheel centre**
2. **Driven flange**
3. **Circlip**

4. Withdraw the driven flange from the wheel, recovering the spacer from the cush drive rubber side of the flange.

Note:

- **It is not necessary to remove the drive flange nuts.**

5. Recover the cush drive rubbers from within the wheel.

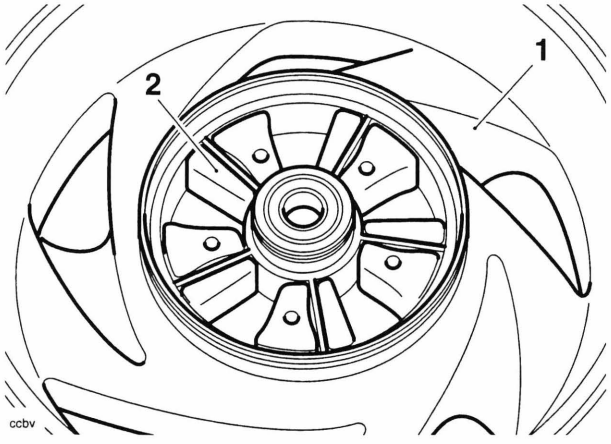

1. Wheel
2. Cush drive rubbers

Installation

1. Position the cush drive rubbers within the wheel centre.
2. Refit the spacer to the inside face of the driven flange.

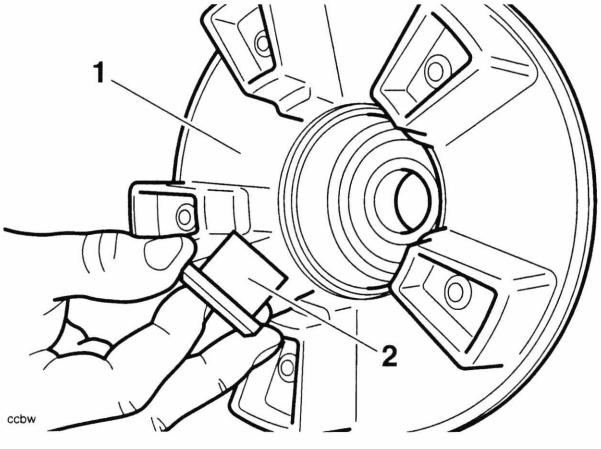

1. Driven flange
2. Spacer

3. Locate the driven flange assembly to the wheel centre, engaging the paddles with the cush drive rubbers. Ensure the spacer is not displaced during assembly.

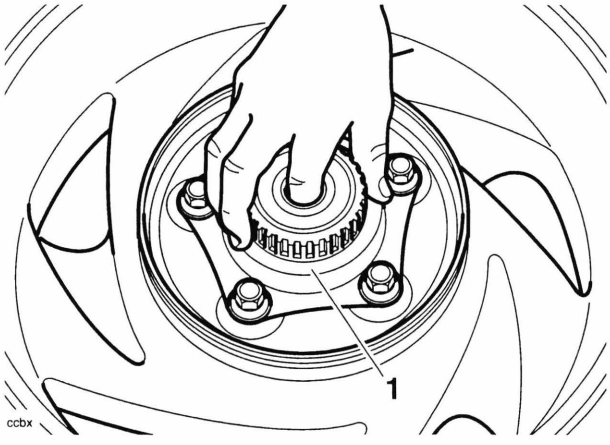

1. Driven flange

4. Retain the assembly with a new circlip.

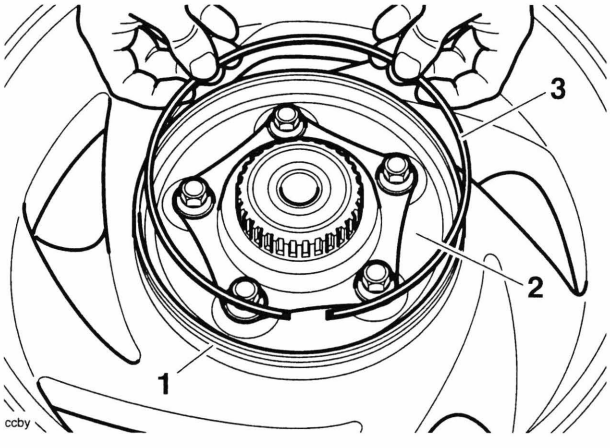

1. Wheel centre
2. Driven flange
3. Circlip

5. Refit the rear wheel (see page *16-11* for Rocket III, Classic and Roadster, see page *16-17* for Rocket III Touring).

Rear Wheel Bearing

Removal

1. Remove the rear wheel (see page *16-10* for Rocket III, Classic and Roadster, see page *16-15* for Rocket III Touring).

Caution

Do not allow the wheel to rest on the brake disc, as this may damage the disc. Support the wheel on wooden blocks, equally spaced around the rim, such that the brake disc is raised above the ground.

2. Lay the wheel on its side while supporting the wheel on wooden blocks to prevent damage to the brake disc.
3. Remove the cush drive (see page *16-18*).
4. Remove and discard the seal and the bearing circlip.

Warning

Always wear eye, hand and face protection when using a drift as use of a hammer and drift can cause bearings to fragment. Pieces of fragmented bearing could cause eye and hand injuries if suitable protective apparel is not worn.

Caution

To prevent wheel damage and to aid bearing removal, always apply force evenly on both sides of the bearing to prevent it from 'tipping' and becoming stuck. Application of uneven force will lead to difficulty in removing the bearing and to a damaged wheel.

5. Using a suitable pin punch, through the centre of the wheel, drift out the wheel bearings. Collect the centre sleeve.

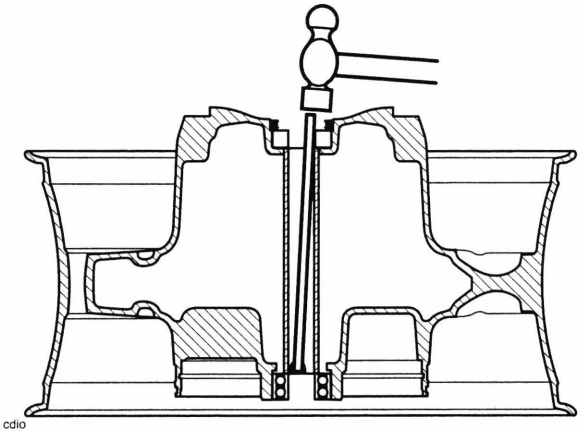

Wheel Bearing Removal

Inspection

Warning

Only remove raised witness marks from within the wheel. Removal of material below any raised areas will reduce the level of interference between the wheel and the bearings. Loss of interference could cause the bearing to become loose in the wheel leading to loss of motorcycle control and an accident.

1. Examine the wheel for any raised witness marks caused by the removal process. Remove any such marks with fine emery paper or a gentle file.

Installation

Note:

- **Refer to the chart below for the correct tool and tool face when inserting bearings. Bearings are inserted by means of a draw-bolt acting on the insertion tool. A support tool is located on the opposite side of the wheel to the insertion tool and as the bolt is tightened, the bearing is drawn in to the wheel.**
- **Insert bearings with the marked or shielded side facing outwards and always fit a new bearing circlip and seals.**

	Bearing insertion tool	Support tool
Left bearing	3880070-T0310 Small face to bearing	3880075-T0310 Small face to wheel
Right bearing	3880070-T0310 Small face to bearing	3880075-T0310 Small face to wheel

1. Fit the wheel bearings and centre sleeve using the method described above.

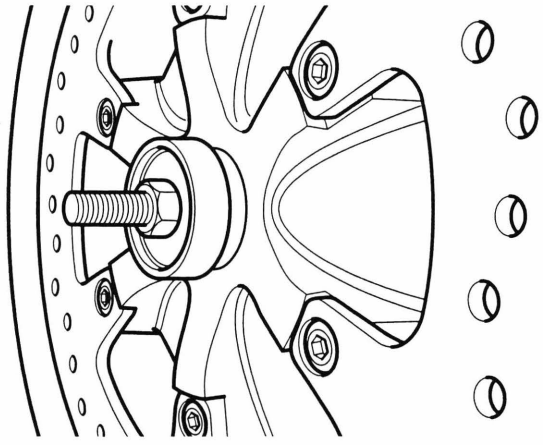

cdin

Tool 3880070 in Position on Wheel

2. Fit a new circlip.
3. Lubricate and fit a new seal to the rear wheel. Lubricate the seal's knife-edge with grease to NLGI 2 specification.
4. Refit the cush drive (see page *16-11*).
5. Refit the rear wheel (see page *16-11* for Rocket III, Classic and Roadster, see page *16-17* for Rocket III Touring).

This page intentionally left blank

17 Frame and Bodywork

Table of Contents

Exploded View - Frame and Fixings - Rocket III, Classic and Roadster 17.3
Exploded View - Frame and Fixings - Rocket III Touring 17.4
Exploded View - Front and Rear Mudguards - Rocket III, Classic and Roadster 17.5
Exploded View - Front and Rear Mudguards - Rocket III Touring 17.6
Exploded View - Front and Rear Footrests - Rocket III 17.7
Exploded View - Front Footrests - Rocket III Roadster 17.8
Exploded View - Front Footboards - Rocket III Classic 17.9
Exploded View - Front and Rear Footboards - Rocket III Touring 17.10
Exploded View - Pannier Rail - Rocket III Touring 17.11
Exploded View - Seat and Tool Kit - Rocket III and Roadster 17.12
Exploded View - Seat and Tool Kit - Rocket III Classic 17.12
Exploded View - Seat, Sissy Bar and Luggage Rack - Rocket III Touring 17.13
Exploded View - Side Panels - Rocket III, Classic and Roadster 17.14
Exploded View - Side Panels - Rocket III Touring 17.14
Exploded View - Windscreen - Rocket III Touring 17.15
Exploded View - Side Stand - Rocket III and Classic 17.16
Exploded View - Side Stand - Rocket III Touring 17.16
General Frame Inspection 17.17
- Bank Angle Indicators - Rocket III, Classic and Roadster 17.17
- Bank Angle Indicators - Rocket III Touring 17.17

Seats 17.18
- Rear Seat - Rocket III and Roadster only 17.18
- Rocket III Classic only: 17.18
- Seat - Rocket III Touring 17.19

Fuel Tank Badge 17.19
- Removal 17.19
- Installation 17.20

Side Covers 17.20
- Removal 17.20
- Installation 17.21

Engine Infill Panels 17.21
Removal 17.21
Installation 17.21
Headstock Covers - Rocket III Touring with an Alarm 17.22
Pannier Rail - Rocket III Touring 17.22
Removal 17.22
Installation 17.23
Front Mudguard - Rocket III, Classic and Roadster 17.24
Removal 17.24
Mudguard embellisher removal 17.24
Embellisher assembly 17.25
Installation 17.25
Front Mudguard - Rocket III Touring 17.25
Removal 17.25
Installation 17.26
Rear Mudguard - Rocket III, Classic and Roadster 17.26
Removal 17.26
Installation 17.28
Rear Mudguard - Rocket III Touring 17.29
Removal 17.29
Installation 17.31
Windscreen - Rocket III Touring 17.33
Removal 17.33
Installation 17.33
Handlebars - Rocket III, Classic and Roadster 17.34
Removal 17.34
Installation 17.36
Handlebar - Rocket III Touring 17.37
Removal 17.37
Installation 17.38
Mirrors 17.40
Removal 17.40
Installation 17.40
Side Stand 17.41
Removal 17.41
Installation 17.41

Exploded View - Frame and Fixings - Rocket III, Classic and Roadster

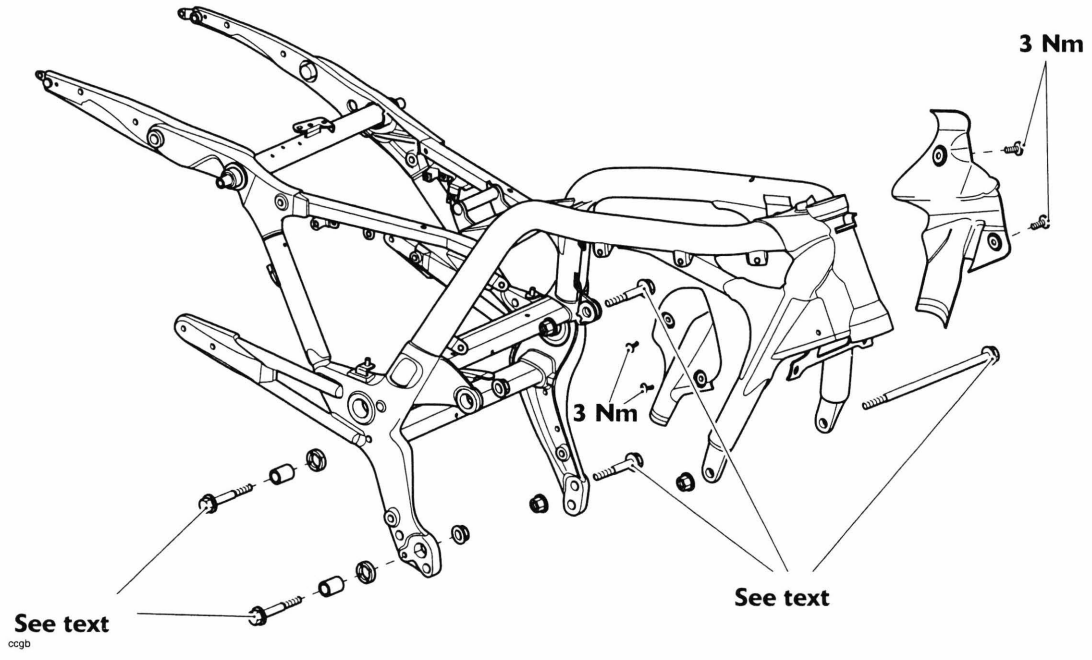

Exploded View - Frame and Fixings - Rocket III Touring

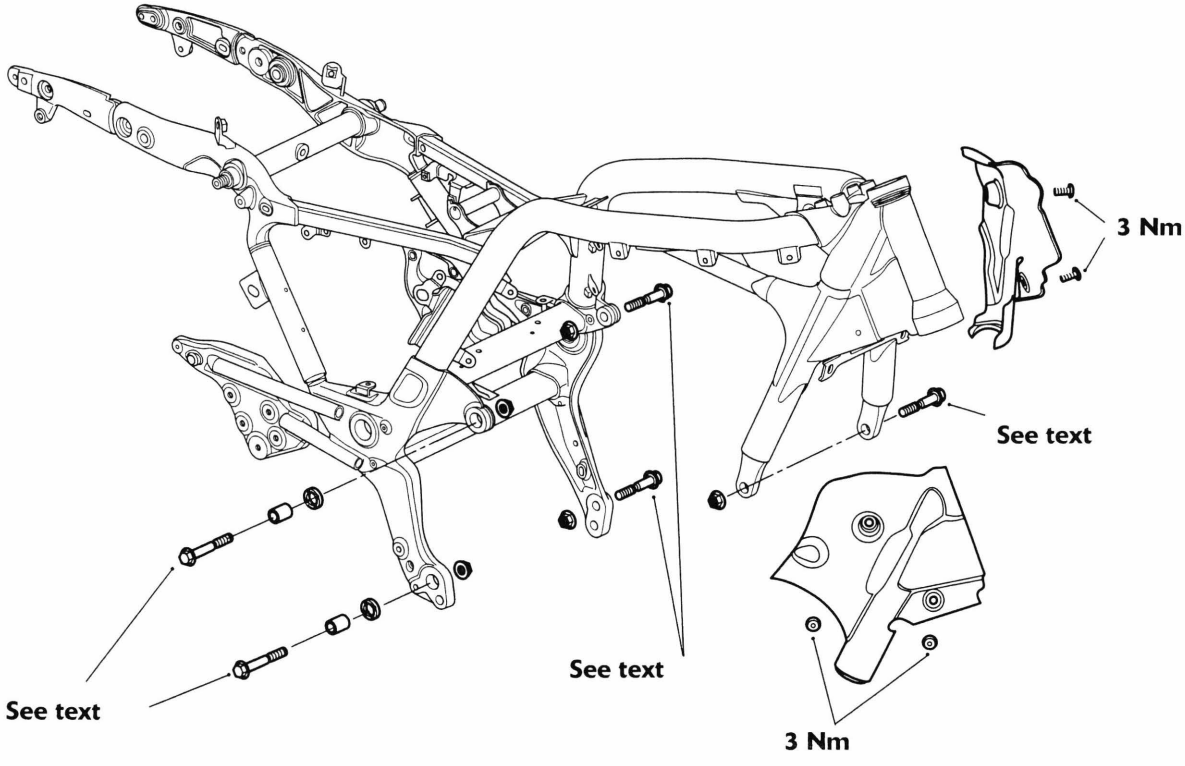

aayy

Exploded View - Front and Rear Mudguards - Rocket III, Classic and Roadster

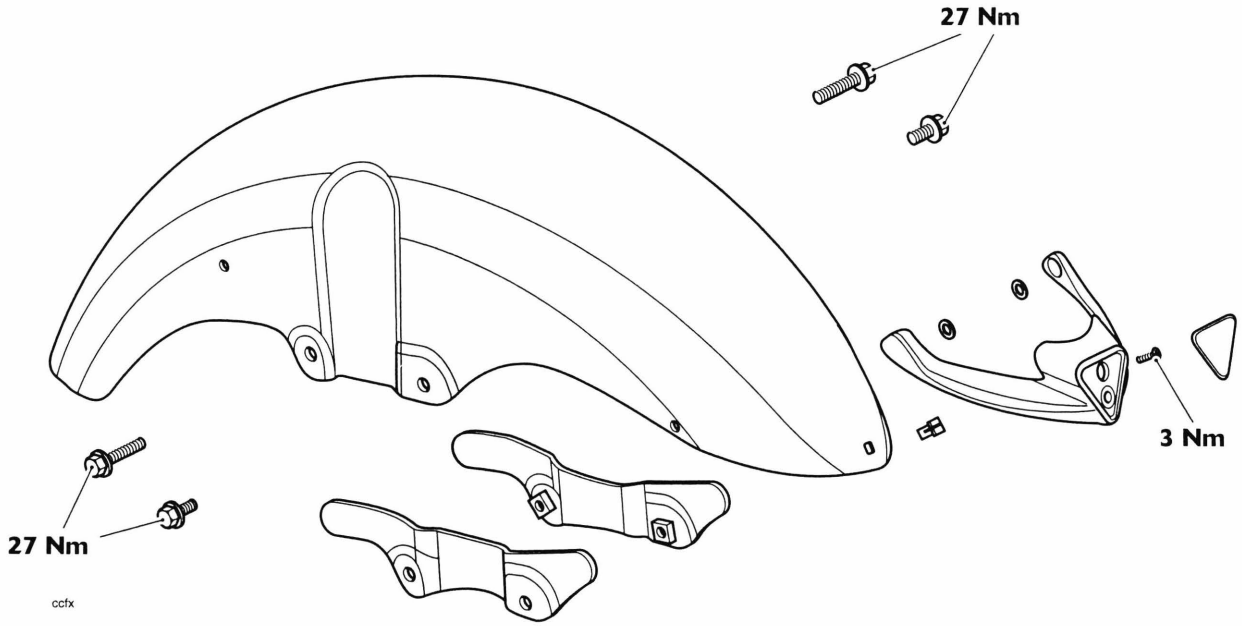

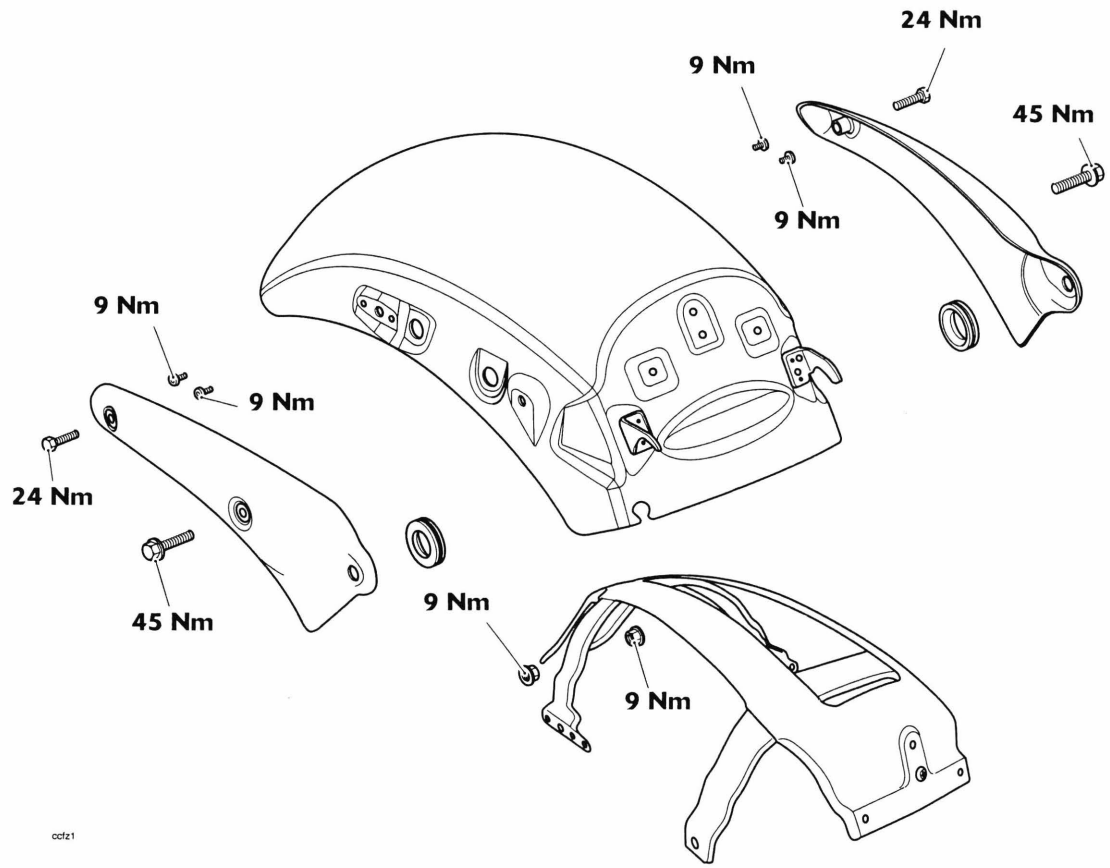

Exploded View - Front and Rear Mudguards - Rocket III Touring

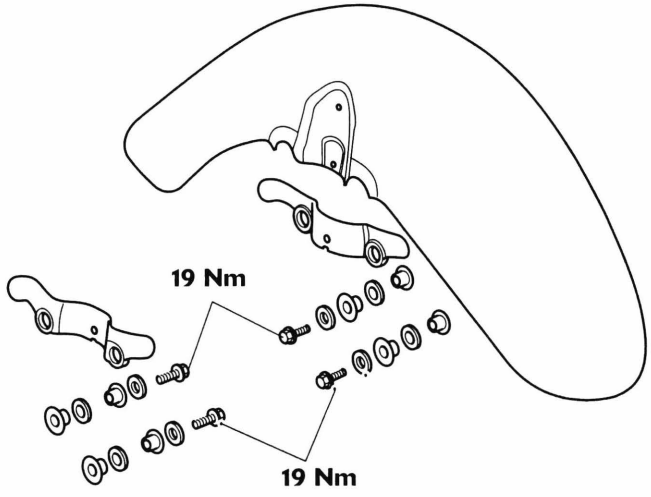

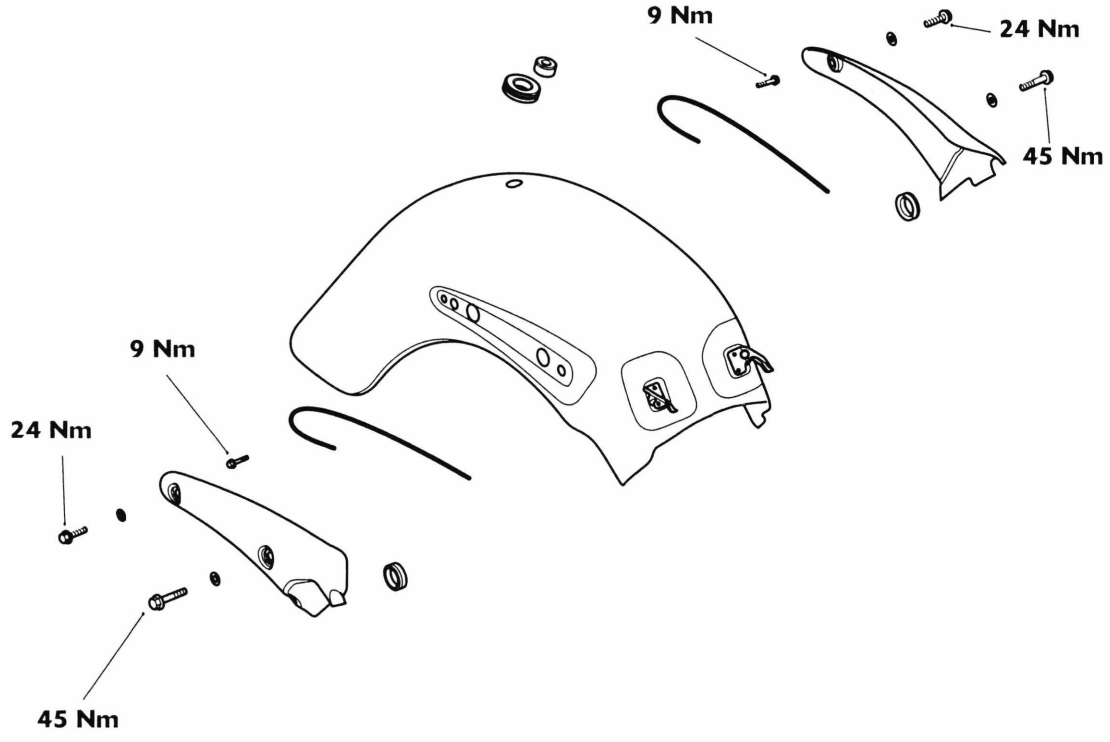

aays

Exploded View - Front and Rear Footrests - Rocket III

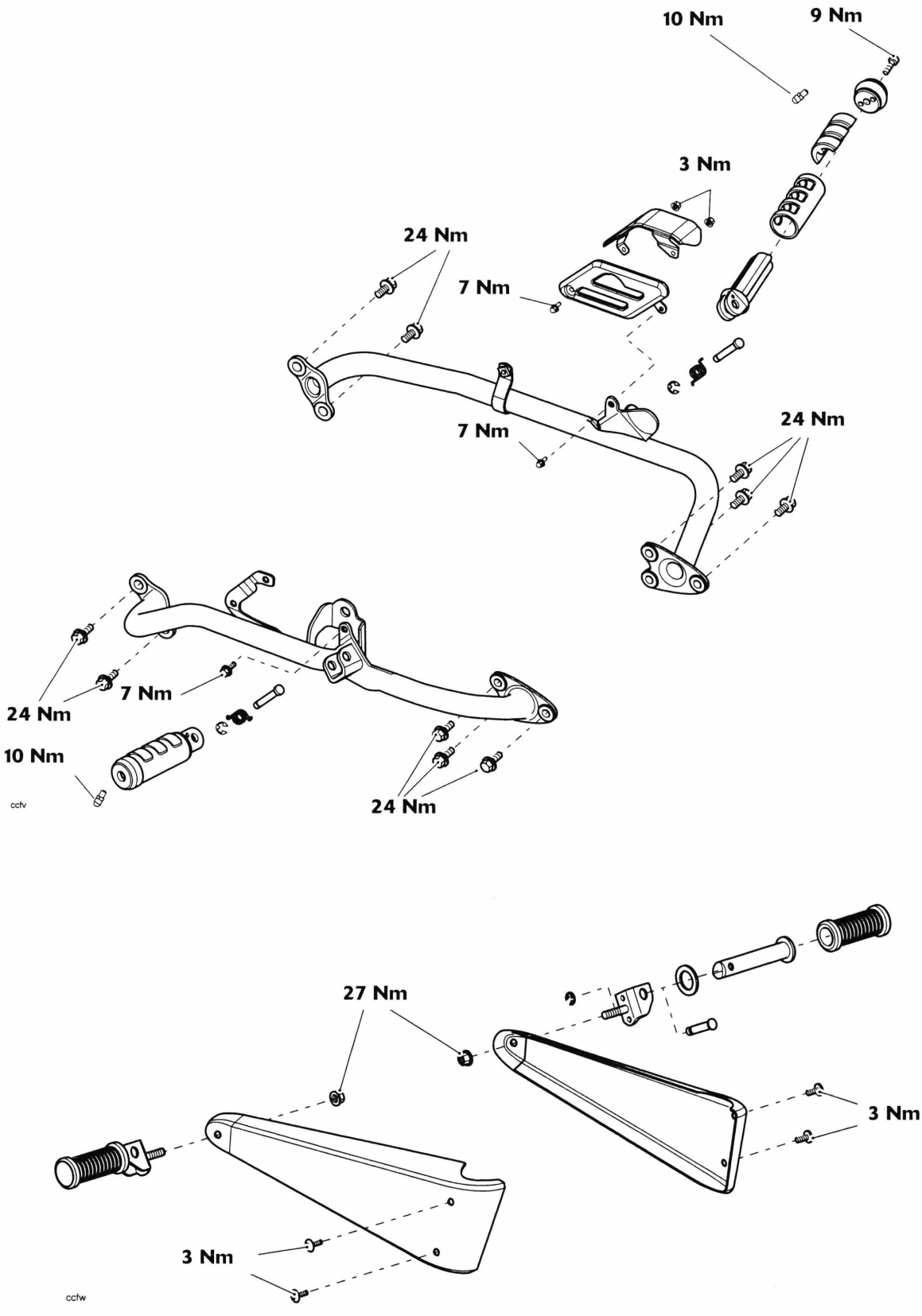

Exploded View - Front Footrests - Rocket III Roadster

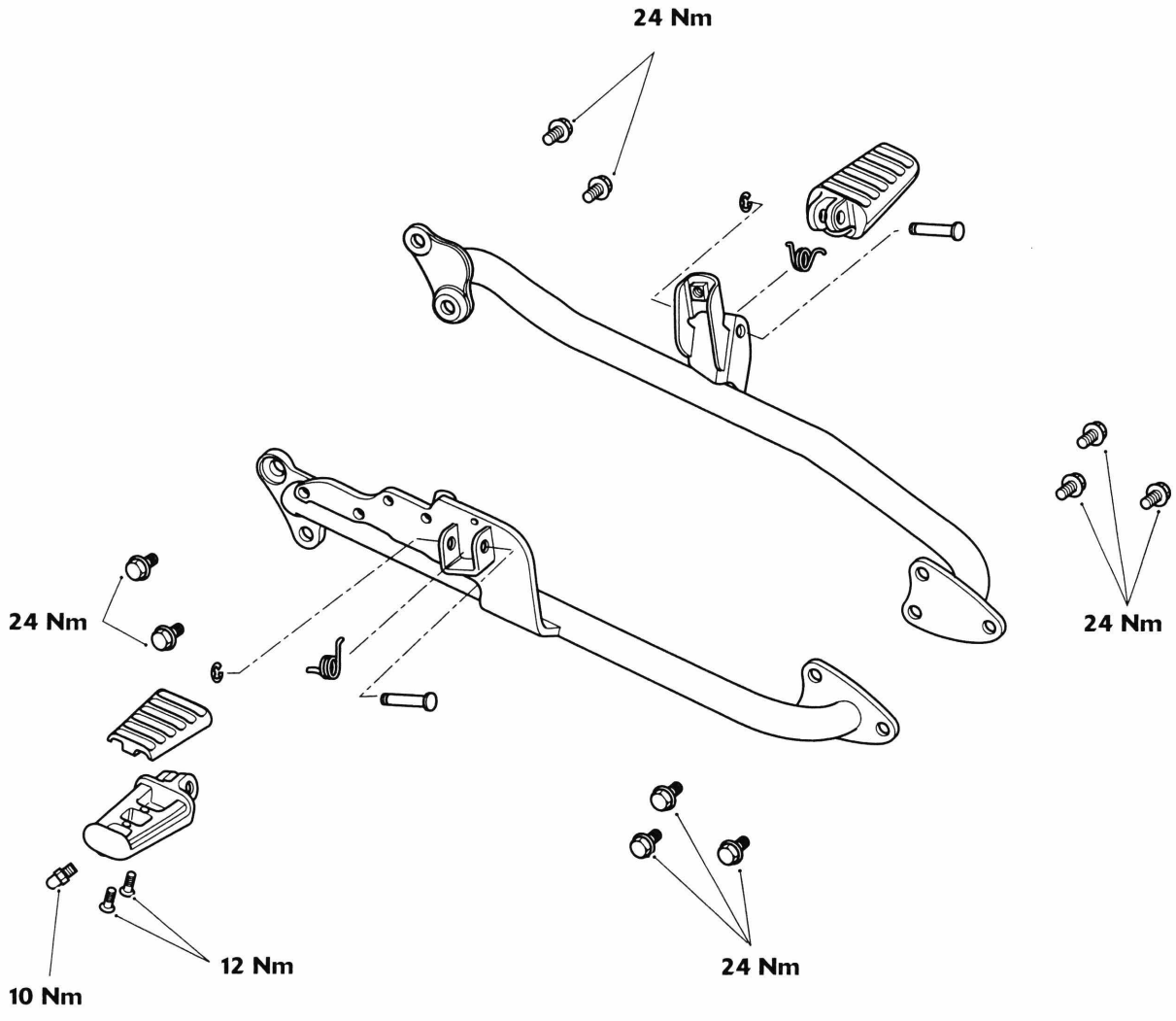

Exploded View - Front Footboards - Rocket III Classic

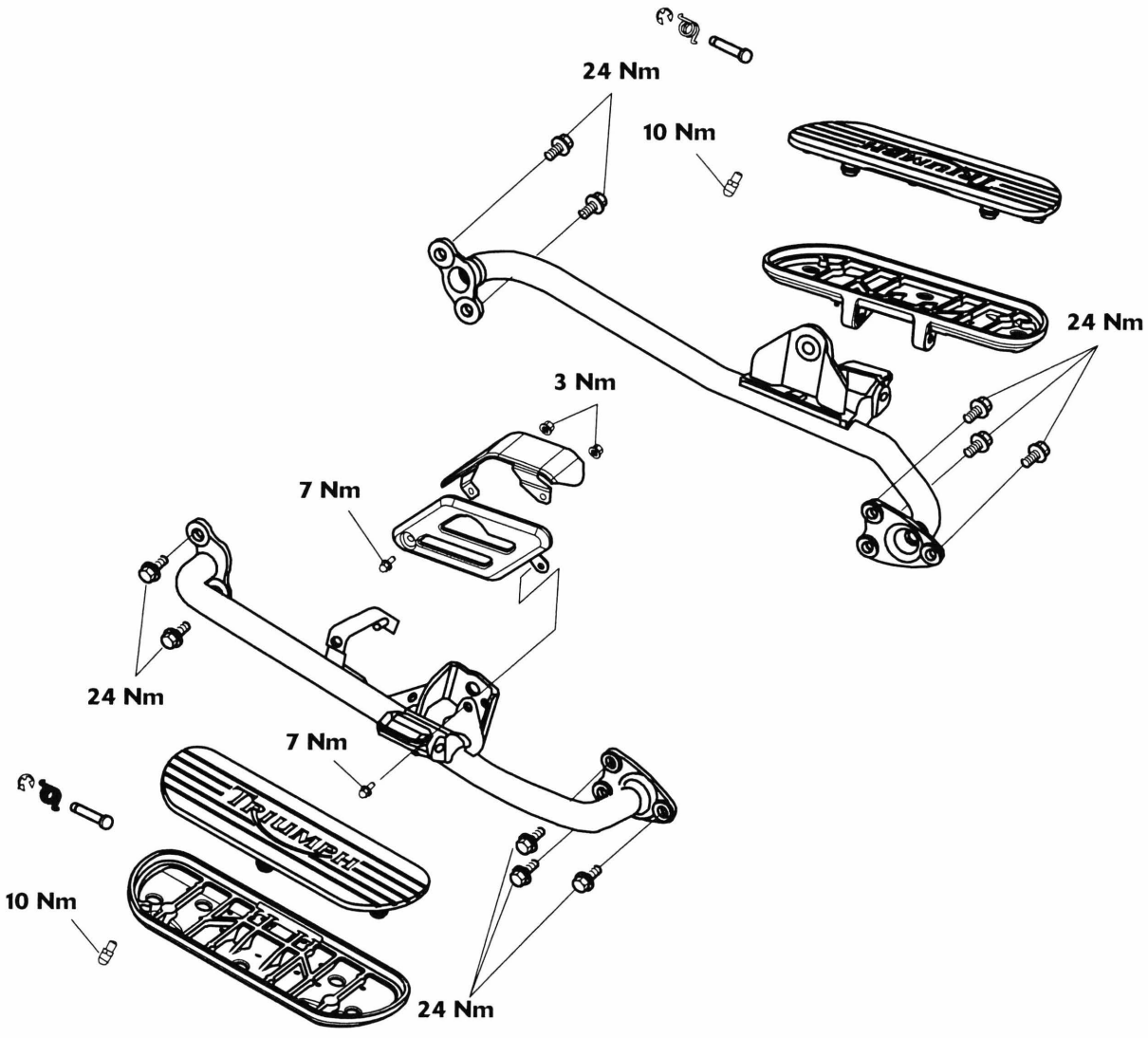

Exploded View - Front and Rear Footboards - Rocket III Touring

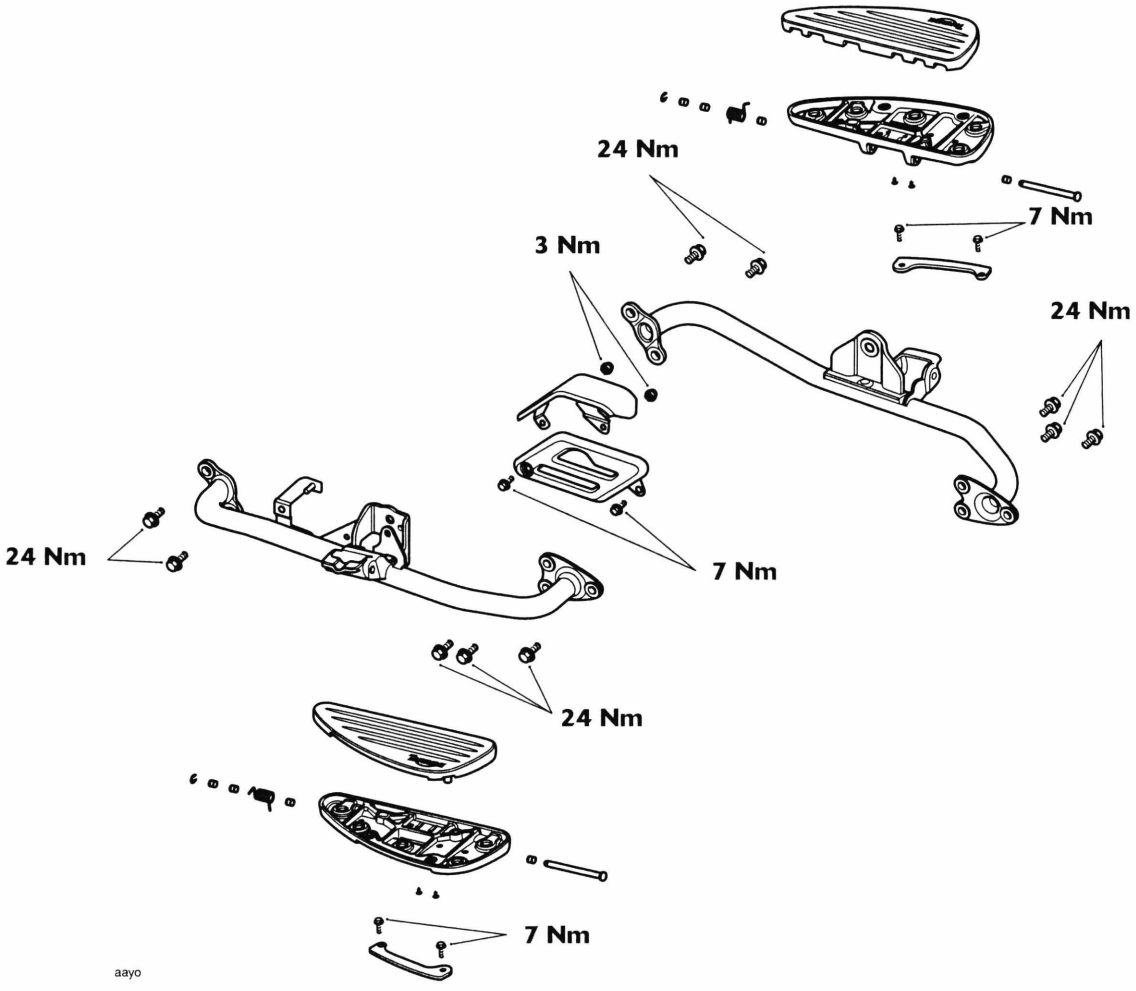

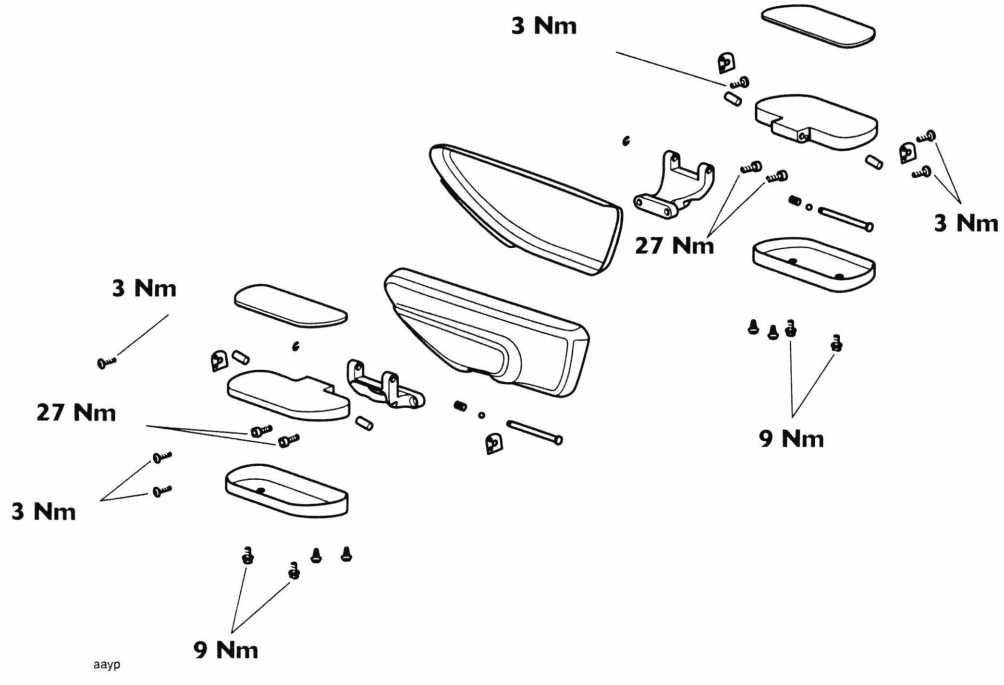

Exploded View - Pannier Rail - Rocket III Touring

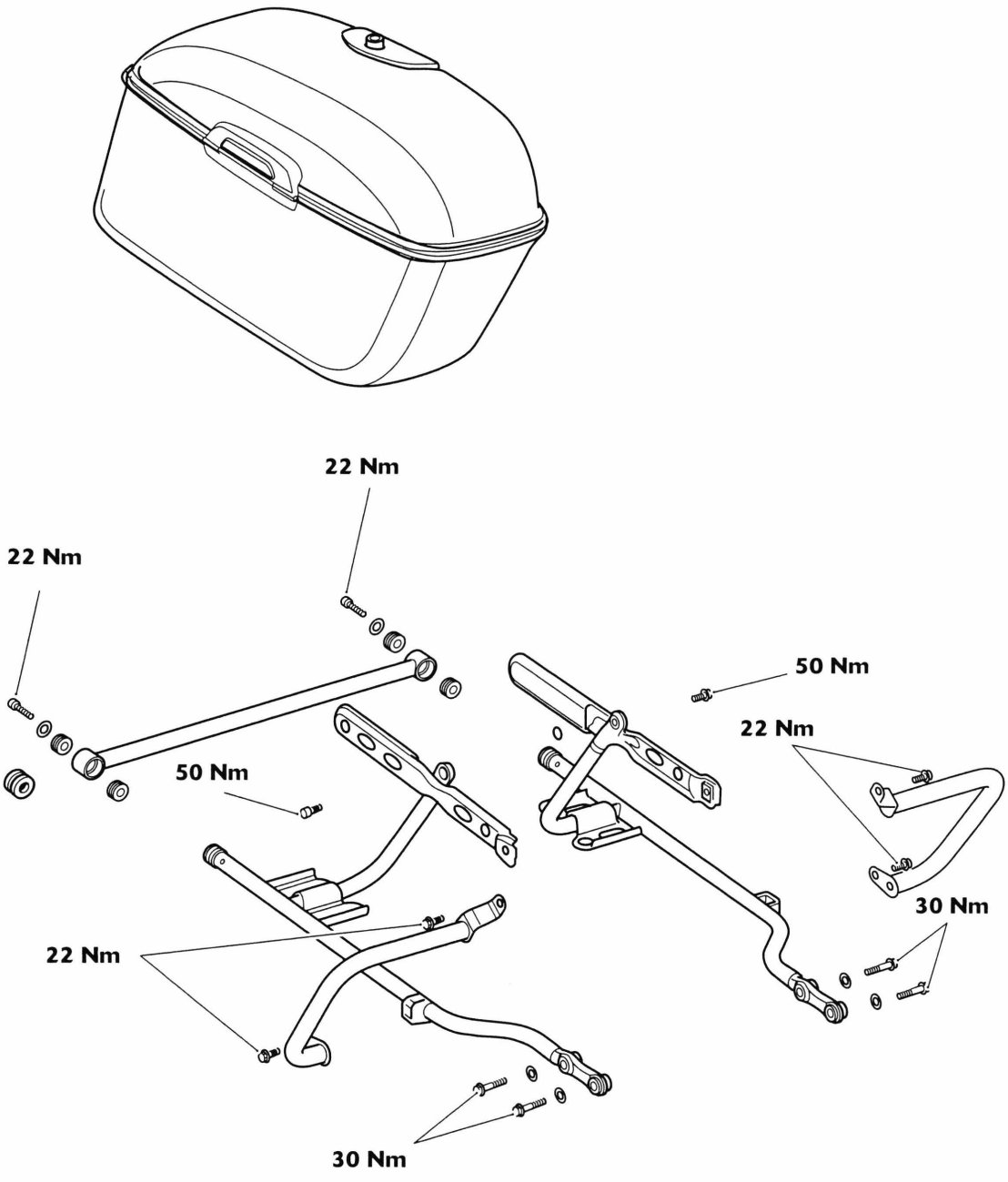

aaye

Exploded View - Seat and Tool Kit - Rocket III and Roadster

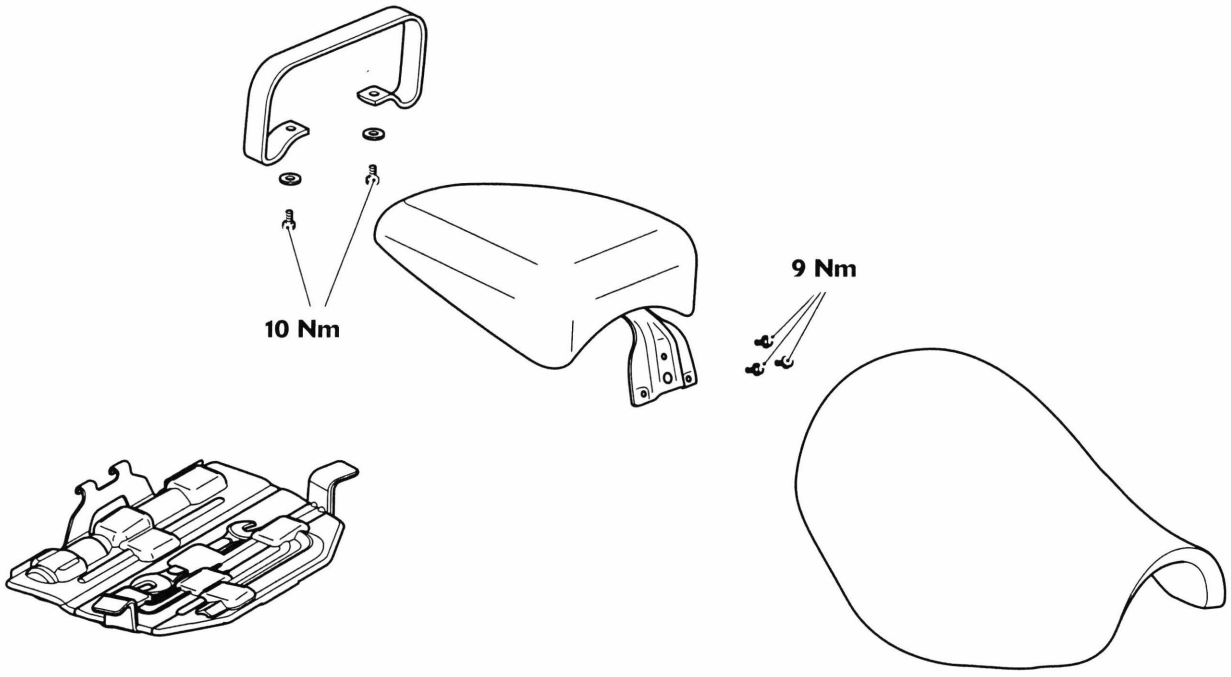

Exploded View - Seat and Tool Kit - Rocket III Classic

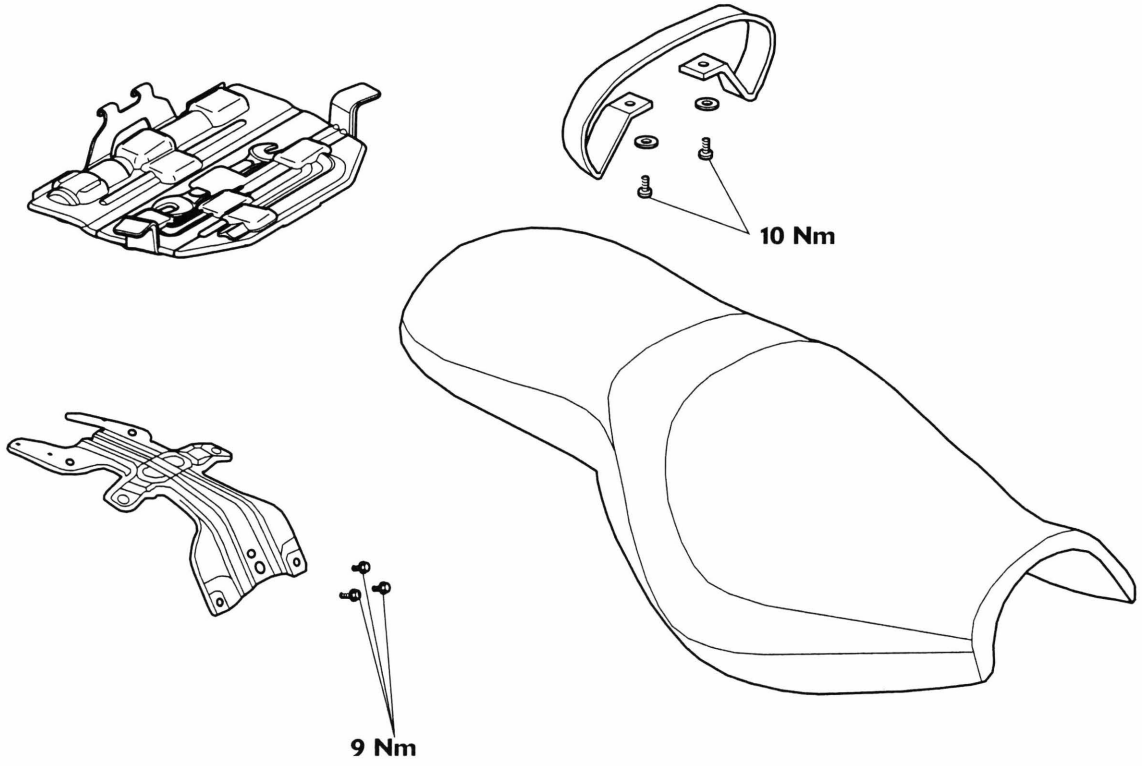

Exploded View - Seat, Sissy Bar and Luggage Rack - Rocket III Touring

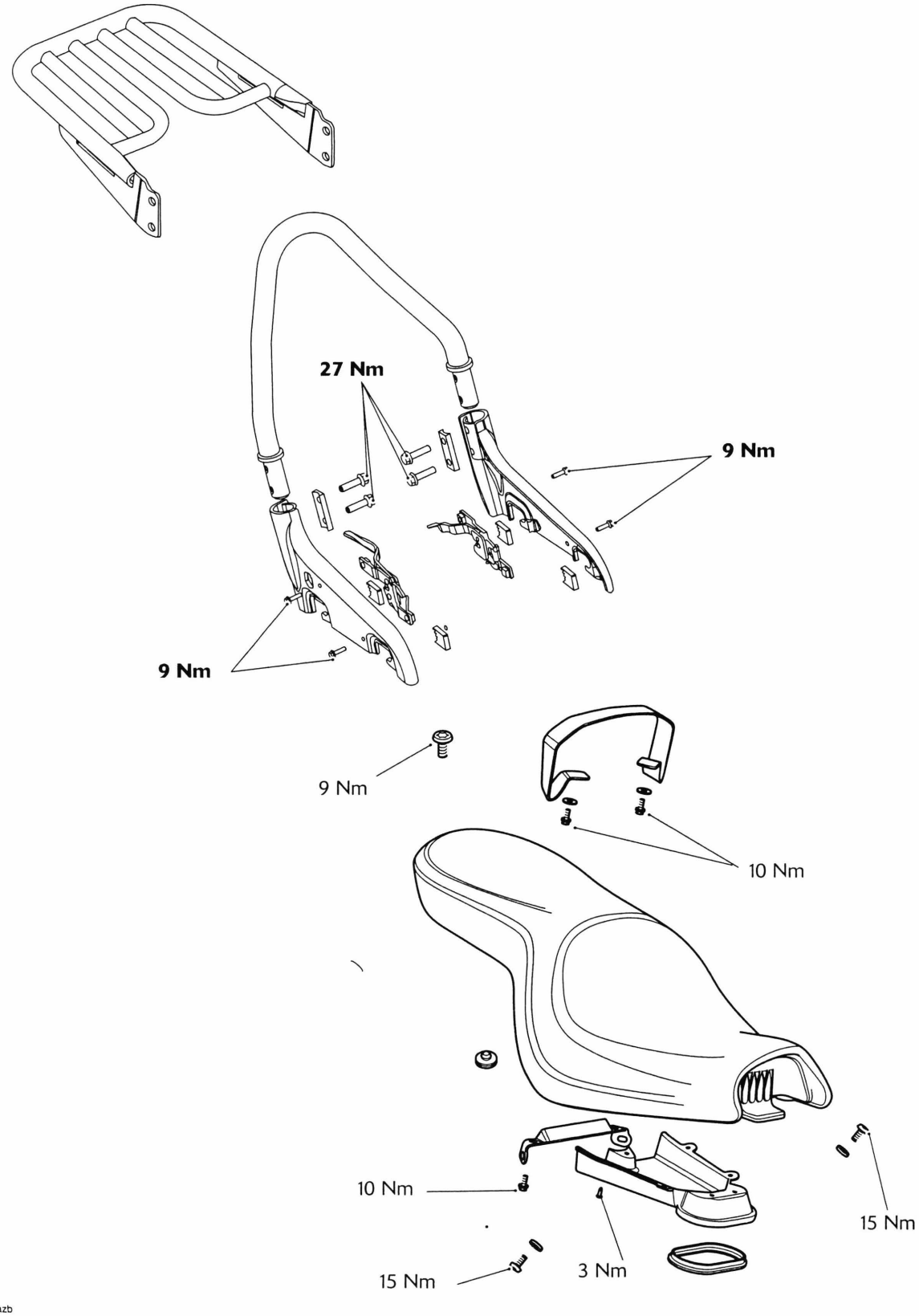

Exploded View - Side Panels - Rocket III, Classic and Roadster

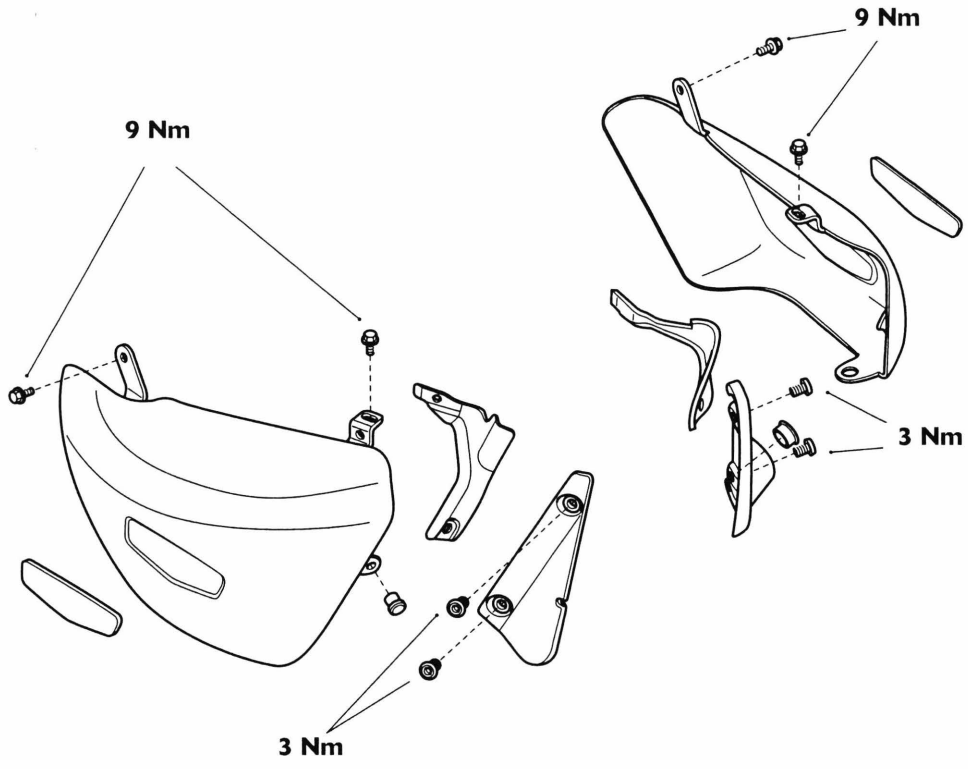

Exploded View - Side Panels - Rocket III Touring

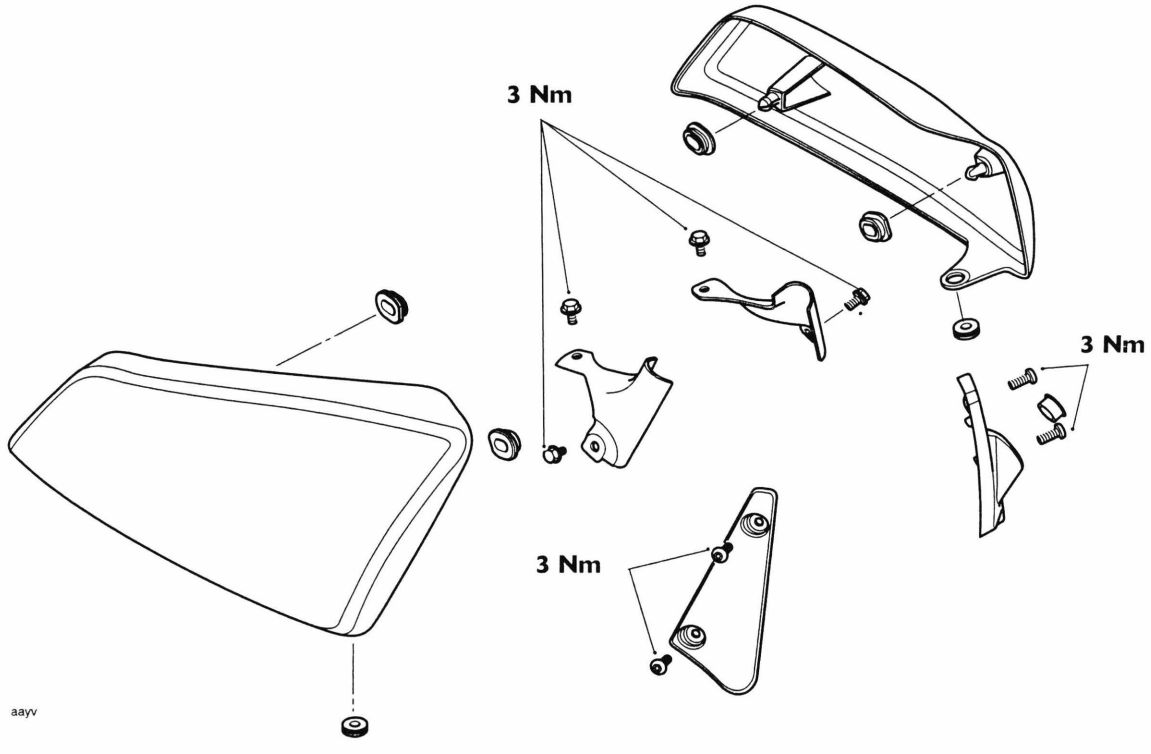

Exploded View - Windscreen - Rocket III Touring

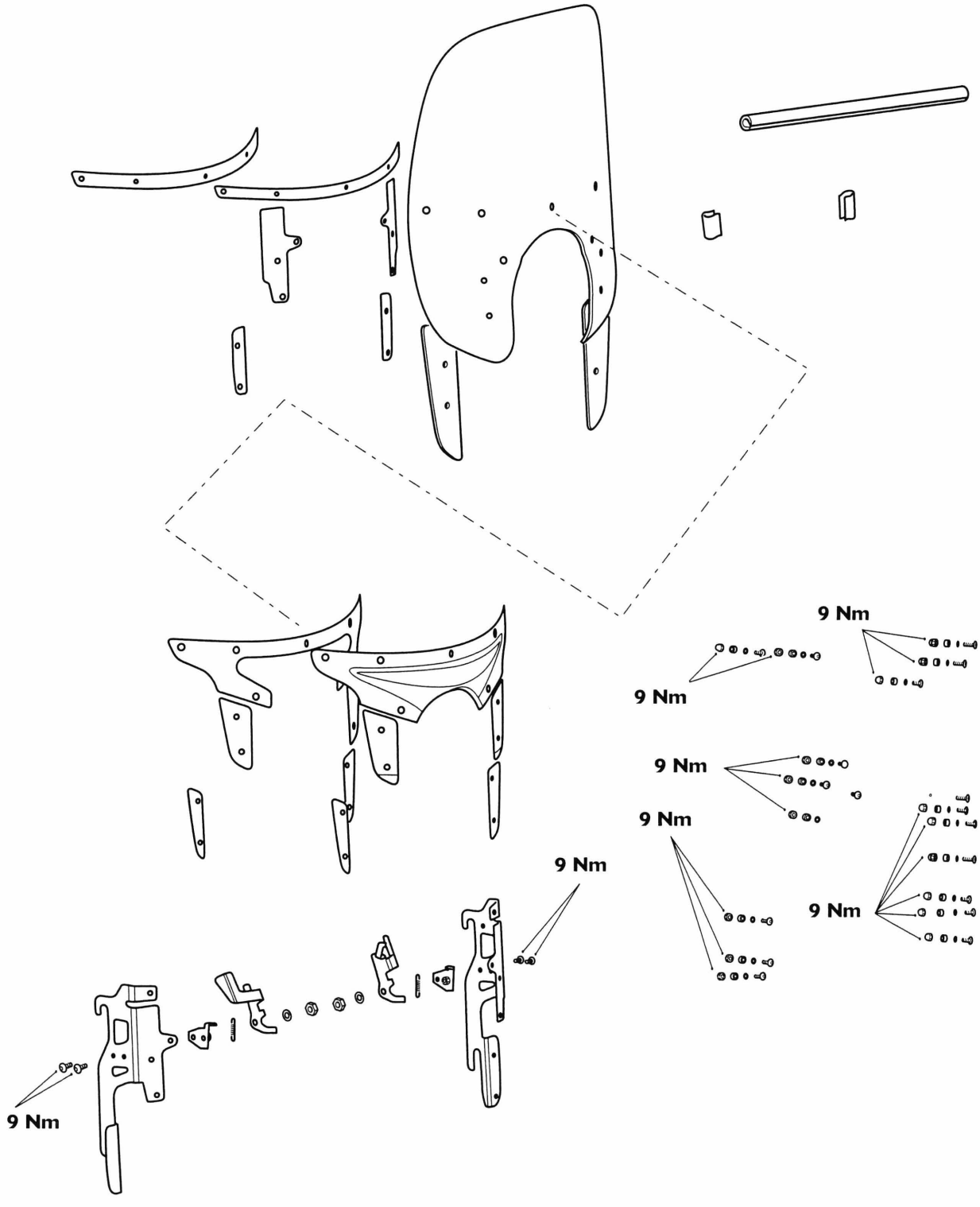

Exploded View - Side Stand - Rocket III and Classic

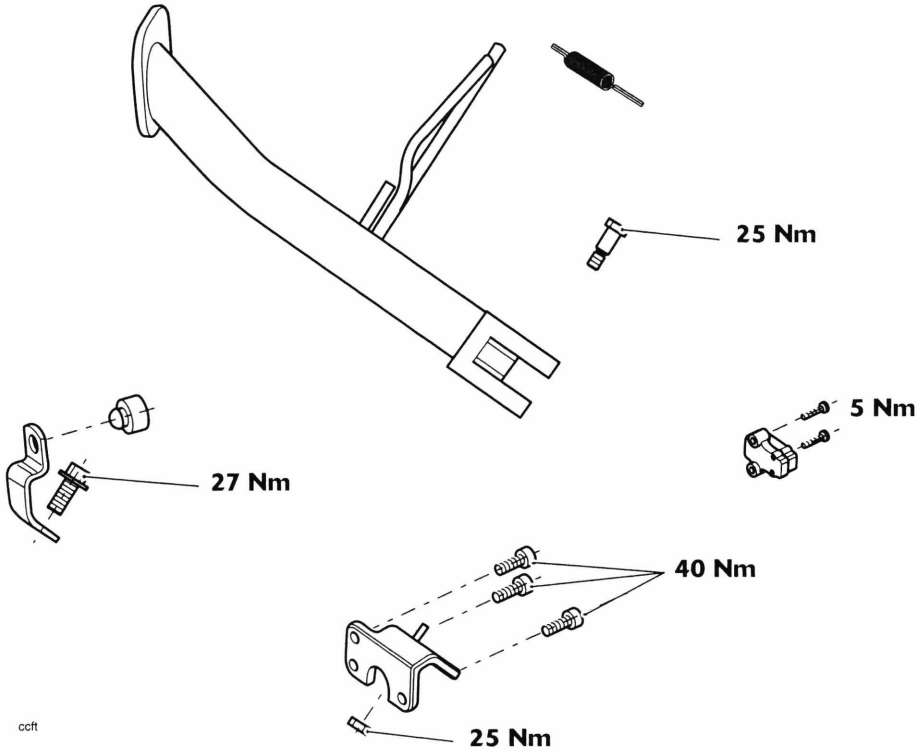

Exploded View - Side Stand - Rocket III Touring

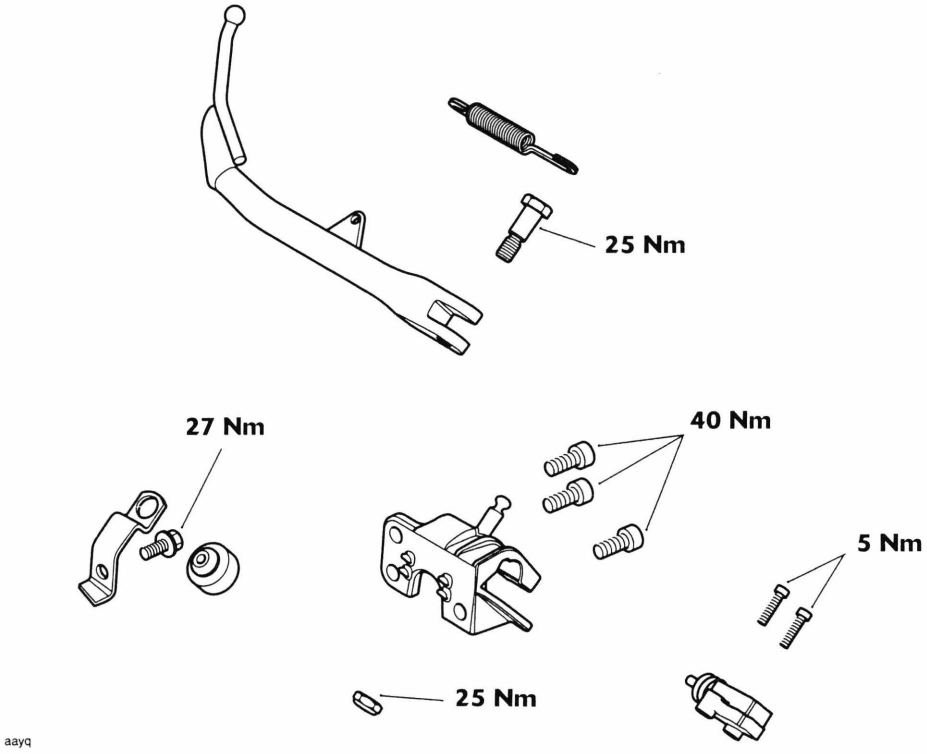

General Frame Inspection

1. Inspect the frame, footboards (if fitted) and footrests for accident and other damage, cracks, splits and general dilapidation. Check all fixings for security. If any faults are found, the frame must be replaced.

Warning

If the motorcycle is involved in an accident or collision it must be taken to an authorised Triumph dealer for inspection and repair before it is ridden again.

Warning

The frame must not be modified in any way. Any modification to the frame, such as welding or drilling, may weaken the structure causing an unsafe riding condition leading to loss of control and an accident.

2. Check the operation of the side stand to make sure it is securely held in the retracted position by the spring. Rectify any faults.

Warning

If the return spring is faulty, the side stand could extend whilst the motorcycle is being ridden. This will cause an unsafe riding condition, which could lead to loss of motorcycle control and an accident.

Bank Angle Indicators - Rocket III, Classic and Roadster

1. Inspect the bank angle indicators on the rider's footrests/footboards for wear. The bank angle indicators are worn out when 5 mm of the bank angle peg remains.

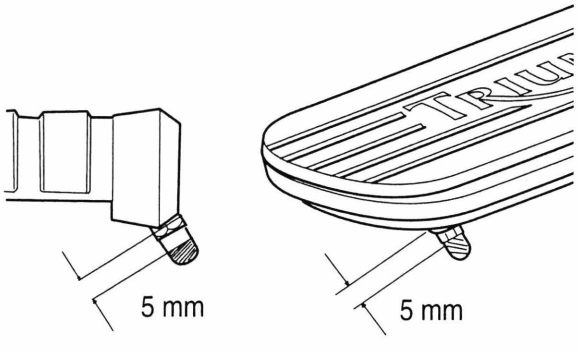

Bank Angle Indicators

Warning

Use of a motorcycle with bank angle indicators worn beyond the maximum limit (when the bank angle indicator is worn to a minimum 5 mm in length) will allow the motorcycle to be banked to an unsafe angle. Therefore, always replace the bank angle indicator pegs when they are worn to 5 mm in length.

Banking to an unsafe angle may cause instability, loss of motorcycle control and an accident.

Warning

The bank angle pegs must not be used as a guide to how far the motorcycle may be safely banked. This depends on many various conditions including, but not limited to, road surface, tyre condition and weather. Banking to an unsafe angle will lead to loss of motorcycle control and an accident.

Bank Angle Indicators - Rocket III Touring

1. Bank angle indicators are located on the outer edge of the riders footboards.
   Inspect the bank angle indicators for wear on the outer edge.
   Replace the bank angle indicators when the bank angle indicator is worn before the footboard can start to get damaged.

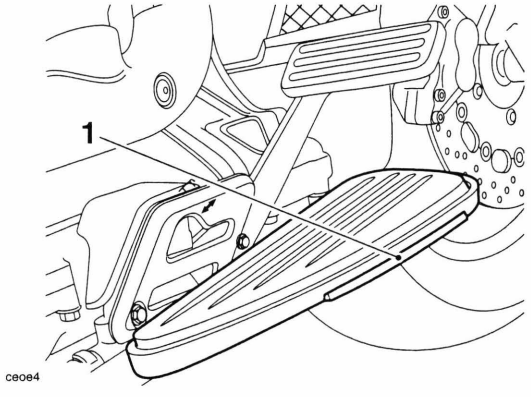

1. Bank angle indicator

Warning

When banking and the bank angle indicator, attached to the riders footboard, makes contact with the ground, the motorcycle is nearing its bank angle limit. A further increase of the banking angle is unsafe.
Banking to an unsafe angle may cause instability, loss of motorcycle control and an accident.

Seats

Warning

Before starting work, ensure the motorcycle is stabilised and adequately supported. This will help prevent it from falling and causing injury to the operator or damage to the motorcycle.

Caution

To prevent damage to the seat and its cover, care must be taken not to drop the seat. Do not lean the seat against the motorcycle or a wall as it may fall. Instead, place the seat, with the seat cover facing up, on a flat surface which is covered with a soft cloth.

Rider's seat - Rocket III, Classic and Roadster

The seat lock is located at the rear of the right hand side cover.

Rocket III and Roadster only: To remove the rider's seat, insert the ignition key into the seat lock and turn it anti clockwise while pressing down on the rear of the seat. This will release the seat from its lock and allow it to be slid upwards for complete removal from the motorcycle.

Rocket III Classic only: To remove the seat, insert the ignition key into the seat lock and turn it anti clockwise, while pulling on the release cord located under the left hand rear of the seat.

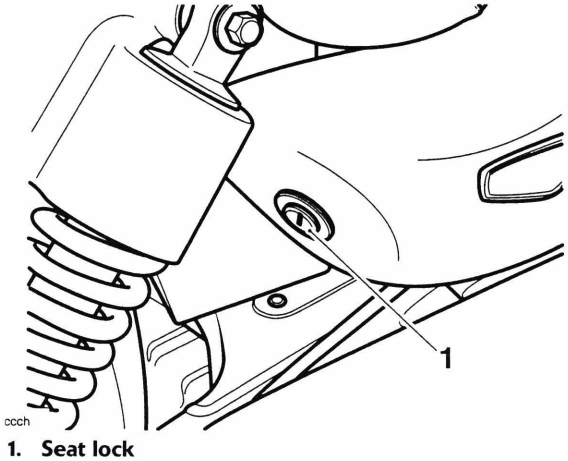

1. Seat lock

Rocket III and Roadster only: To refit the rider's seat, engage the seat's tongue under the fuel tank and press down at the rear to engage in the seat lock.

Rear Seat - Rocket III and Roadster only

Remove the rider's seat and release the fixings securing the rear seat to the mudguard.

To refit the rear seat, position it to the rear mudguard and tighten the three fixings to **9 Nm**. Refit the rider's seat.

Rocket III Classic only:

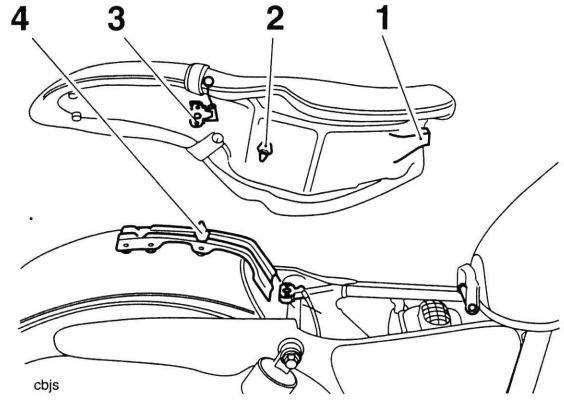

1. **Seat tongue**
2. **Centre bayonet**
3. **Rear lock**
4. **Rear bayonet**

Note:

- **An audible click can be heard when the bayonets have engaged into the locks.**

1. Position the seat to the motorcycle and engage the tongue at the front edge of the seat beneath the fuel tank bridge.
2. Align the centre and rear bayonets, pressing home the bayonet to the rear lock first.
3. Press down in the middle of the seat to engage the bayonet to the centre lock.
4. Grasp the seat and pull upwards to check the seat's security.

Warning

To prevent detachment of the seat during riding, after fitting always grasp the seat and pull firmly upwards. If the seat is not correctly secured in the lock it will detach from the rear frame. A loose or detached seat could cause loss of motorcycle control and an accident.

Seat - Rocket III Touring

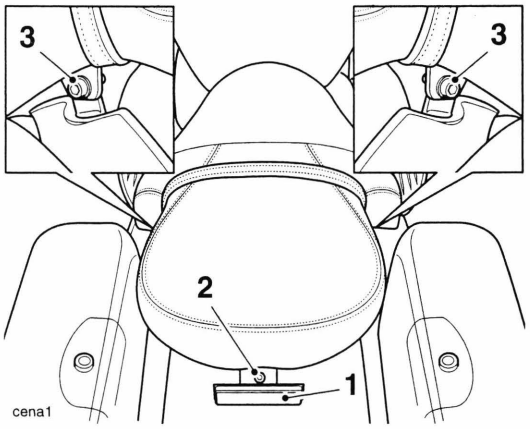

1. **Rear reflector**
2. **Rear fixing**
3. **Side fixings**

1. To remove the seat, remove the rear fixing, with the reflector, and the two side fixings. Lift the seat up at the back for complete removal from the motorcycle.
2. To refit the seat, engage the seat's tongue under the fuel tank, fit and tighten the side fixings to **15 Nm**.
3. Fit the rear fixing, with the reflector, and tighten to **9 Nm**.

Warning

To prevent detachment of the seat during riding, after fitting always grasp the seat and pull firmly upwards. A loose or detached seat could cause loss of motorcycle control and an accident.

Fuel Tank Badge

Removal

Warning

Before starting work, ensure the motorcycle is stabilised and adequately supported. This will help prevent it from falling and causing injury to the operator or damage to the motorcycle.

1. Mark the position of the existing badge on the fuel tank with masking tape as shown below.

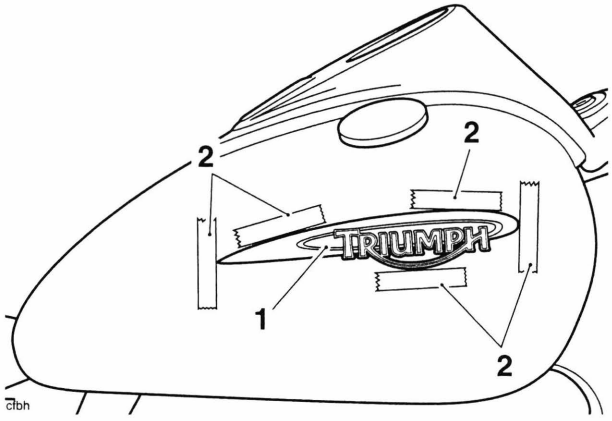

1. **Fuel tank badge**
2. **Masking tape**

Caution

Damage to painted surfaces could result from inadequate care during this process. Do not use any tools to remove the badge from the fuel tank.

2. Starting at the rear of the existing badge and without using any tools, carefully peel the badge away from the fuel tank, taking care not to damage the fuel tank painted surfaces.
3. Completely remove any remaining traces of fuel tank badge adhesive from the fuel tank, taking care not to remove or reposition the masking tape applied earlier.

Warning

Read the warning notices printed on the cleaning wipe packet.

Installation

1. Clean the surface of the fuel tank with a cleaning wipe, part number A9930007, or a suitable alternative.

⚠ Caution

When fitting the badge care must be taken to ensure positioning is correct and accurate. Once the badge has been attached to the fuel tank, there is no satisfactory method of removal, without subsequent damage to the badge. Initial bonding is instant, full bonding is achieved after 72 hours. Once the badge has been removed, it cannot be refitted.

2. Remove the protective film from the back of the badge and align it to the masking tape markers on the fuel tank. Press firmly to secure.
3. Repeat the above procedure for the remaining fuel tank badge.
4. Remove the masking tape from the fuel tank.

Side Covers

Removal

⚠ Warning

Before starting work, ensure the motorcycle is stabilised and adequately supported. This will help prevent it from falling and causing injury to the operator or damage to the motorcycle.

Rocket III, Classic and Roadster

1. Remove the seat (see page *17-18*).
2. Raise the tool kit.
3. Release the two screws securing each side cover to the frame.

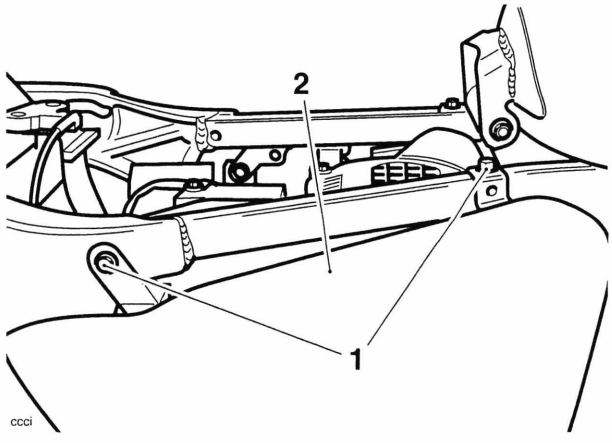

1. **Screws**
2. **Side covers**

Note:

- **During removal of the right hand side cover, disengage the seat lock from the rear of the cover.**

4. Raise each side cover until clear of the mounting posts. The covers may then be removed from the motorcycle.

Rocket III Touring

1. Lower the passenger footboards.
2. Pull the top of the side cover to detach the two upper mounting bayonets.

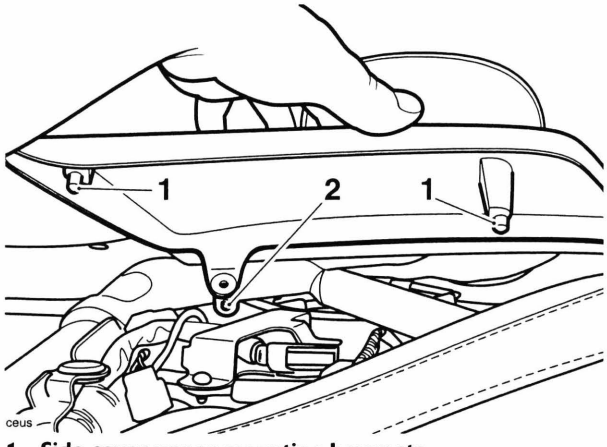

1. Side cover upper mounting bayonets
2. Lower mounting post

3. Raise each side cover until clear of the mounting posts. The covers may then be removed from the motorcycle.

Installation

Note:

- **Ensure that the mounting post grommets are correctly installed in the cover bases.**

Rocket III, Classic and Roadster

4. Install the covers to their mounting posts ensuring the grommets are not displaced. Ensure that the right hand cover engages correctly over the seat lock.
5. Fit and tighten the cover screws to **9 Nm**.
6. Pivot the tool kit into place.
7. Refit the seat (see page *17-18*).

Rocket III Touring

8. Install the covers to their mounting posts ensuring the grommets are not displaced.
9. Align the upper mounting bayonets to their mountings on the frame.
10. Press on the upper mounting bayonets to engage them into their mountings.

Engine Infill Panels

Engine infill panels are fitted to the frame, towards the rear of the engine, on both sides of the motorcycle.

Removal

Warning

Before starting work, ensure the motorcycle is stabilised and adequately supported. This will help prevent it from falling and causing injury to the operator or damage to the motorcycle.

1. Release the two screws securing each panel to the frame.

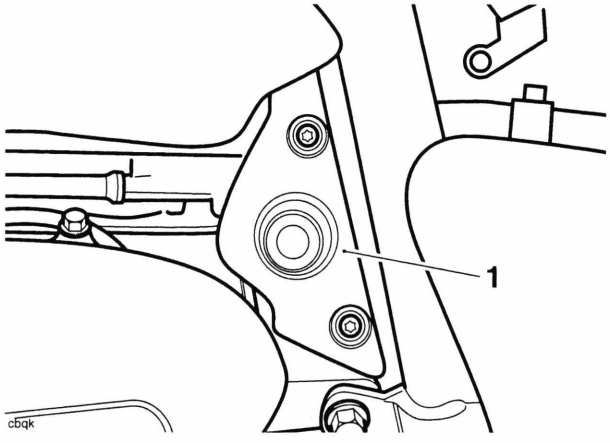

1. Infill panel

2. Withdraw the infill panel.

Note:

- **A connector bracket is located behind the infill panel on the left hand side.**

Installation

1. Position the left hand engine infill panel to the frame. Align the screw holes in the panel with those in the connector bracket and frame.
2. Fit the screws and tighten to **3 Nm**.
3. Repeat for the right hand panel.

Note:

- **There is no connector bracket on the right hand side.**

Headstock Covers - Rocket III Touring with an Alarm

Note:

- **The upper screw securing the headstock cover is fitted with a locknut. Do not release the upper screw before removing the locknut.**

1. To gain access to the locknut, raise the fuel tank (see page *11-125*).

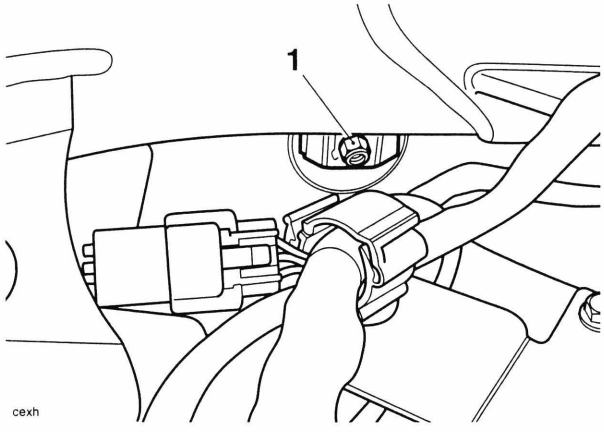

1. Lock nut

Note:

- **Lock nuts can be re-used providing resistance can be felt when the locking portion passes over the thread of the bolt or stud.**
  Always use the correct replacement lock nut as recommended in the Triumph parts catalogue.

2. Fit the lock nut and tighten to **3 Nm**.

Pannier Rail - Rocket III Touring

Removal

Warning

Before starting work, ensure the motorcycle is stabilised and adequately supported. This will help prevent it from falling and causing injury to the operator or damage to the motorcycle.

1. Open the pannier lid.
2. Release the pannier quick release fixings and remove the pannier.

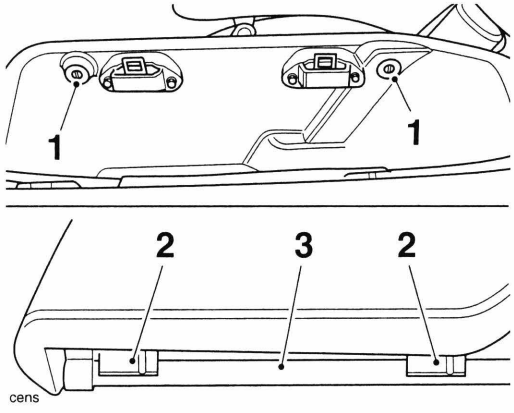

1. Quick release fixings
2. Pannier lower mountings
3. Pannier rail

3. Release the outrigger cover fixings and remove the outrigger cover, on both sides.

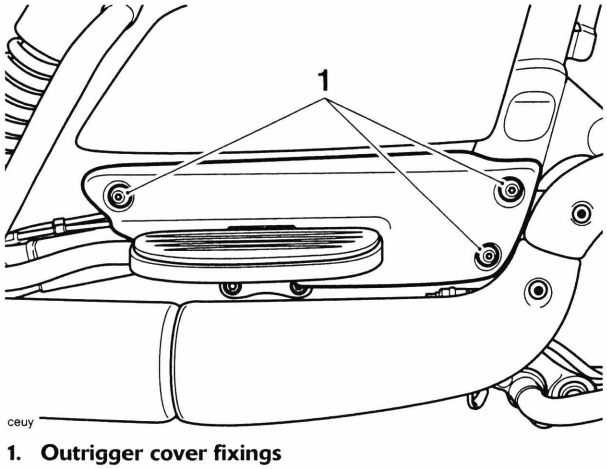

1. Outrigger cover fixings

4. Release the pannier rail link fixings and remove the pannier rail link.

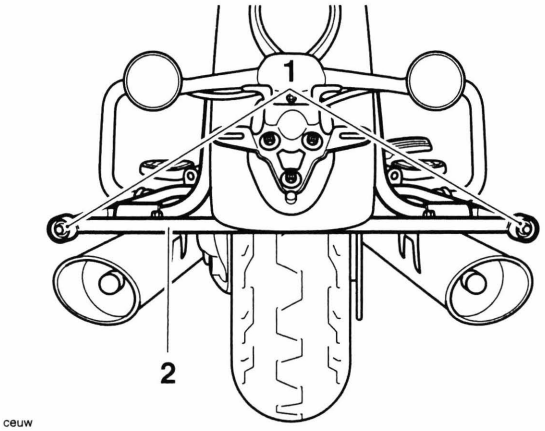

1. Pannier rail link fixings
2. Pannier rail link

5. Release the pannier rail rear fixings, on both sides.

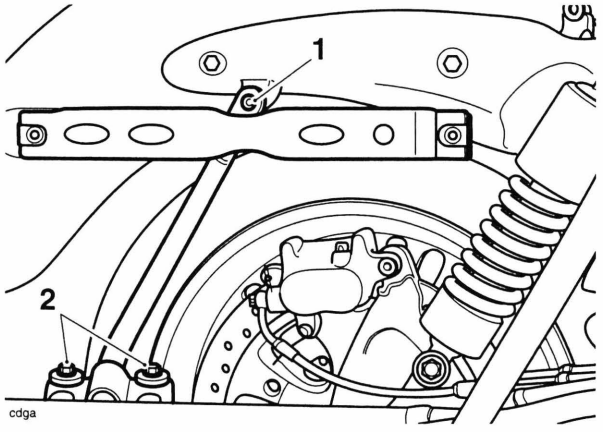

1. Pannier rail rear fixing to frame
2. Pannier rail rear fixings to exhaust silencer

6. Release the pannier rail front fixings and remove the pannier rail, on both sides.

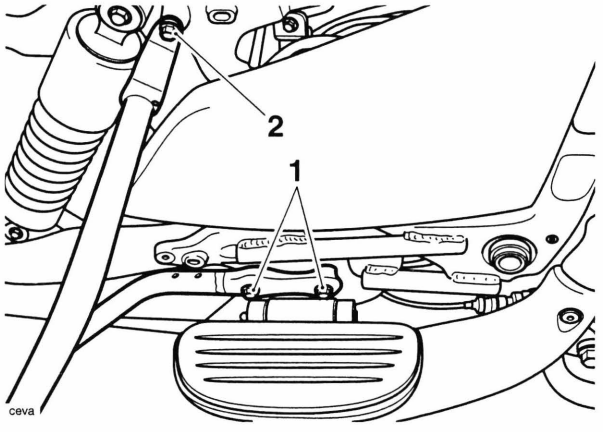

1. Pannier rail front fixings
2. Pannier rail dresser bar top fixing

Installation

1. Position the left hand pannier rail to the frame. Align the fixing holes in the pannier rail to those in the frame.
2. Fit the front fixings and tighten to **30 Nm**.
3. Fit the rear fixing to the frame and tighten to **50 Nm**.
   Fit the rear fixings to exhaust silencer and tighten to **22 Nm**.
4. Repeat for the right hand pannier rail.
5. Position the pannier rail link. Fit the pannier rail link fixings and tighten to **50 Nm**.
6. Position the outrigger covers. Fit the outrigger fixings and tighten to **3 Nm**.
7. Align the pannier lower mountings to the pannier rail.
8. Align the two upper quick release fixings to the pannier rail.
9. Turn the quick release fixings one quarter turn clockwise to the locked position.

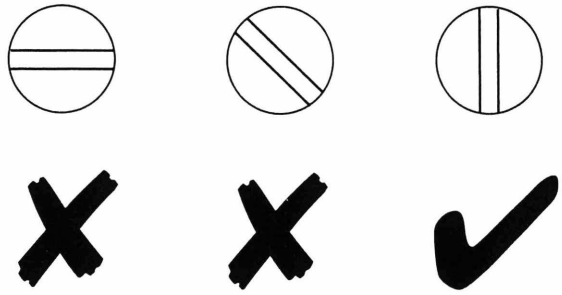

Pannier Quick Release Fixings Locked

Warning

Always ensure the panniers are secure and the quick release fixings are locked. A loose or detached pannier could cause loss of motorcycle control and an accident.

Front Mudguard - Rocket III, Classic and Roadster

Removal

Warning

Before starting work, ensure the motorcycle is stabilised and adequately supported. This will help prevent it from falling and causing injury to the operator or damage to the motorcycle.

1. Undo the fixings securing the mudguard shrouds to the fork legs.

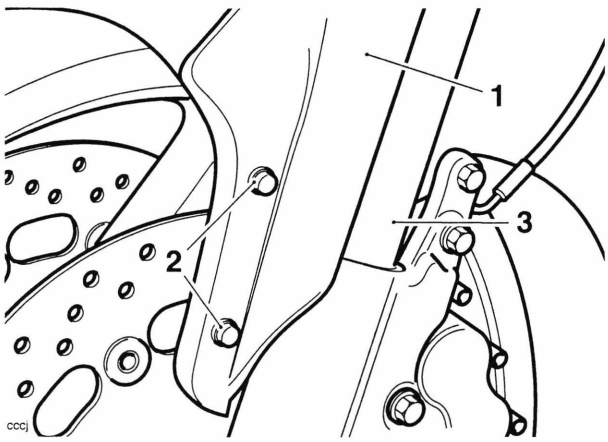

1. **Mudguard shroud**
2. **Mudguard shroud fixings**
3. **Fork leg**

2. Detach both shrouds.
3. Detach the brake hoses from their clips on each side of the mudguard.

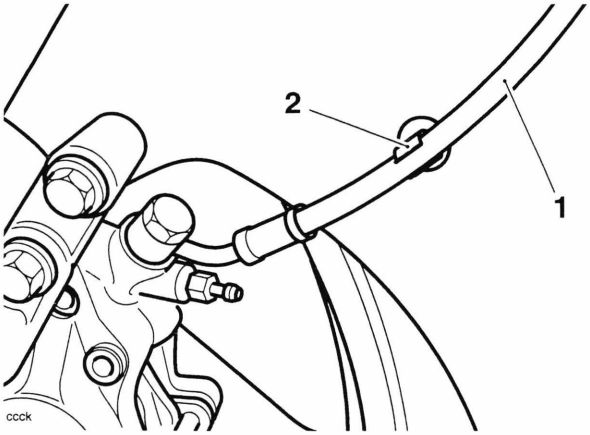

1. **Brake hoses**
2. **Clips**

4. Release the mudguard fixings and detach the mudguard.

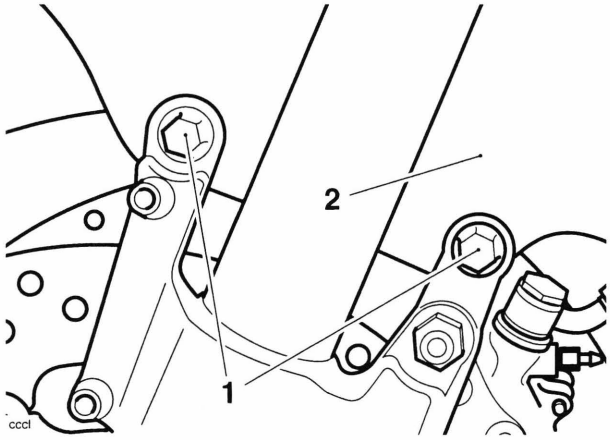

1. **Mudguard fixings**
2. **Mudguard**

Mudguard embellisher removal

Note:

- **To remove the embellisher from the mudguard, it is necessary to remove the triangular Triumph sticker. The sticker will then typically require replacement.**

1. Remove the star-washers from each side of the embellisher, inside the mudguard.

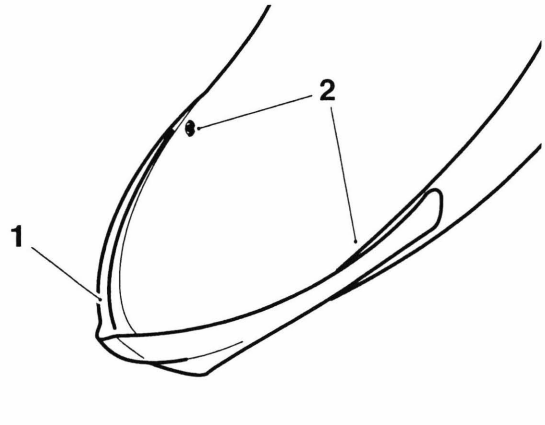

1. **Embellisher**
2. **Star washers**

2. Peel back the triangular Triumph sticker to reveal the screw head beneath it.

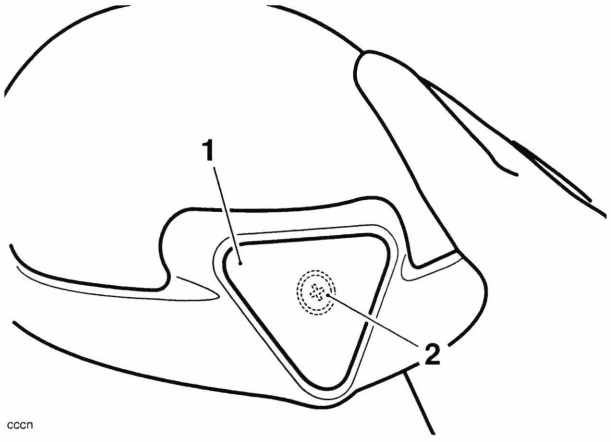

cccn

1. **Sticker**
2. **Screw head**

3. Release the screw to allow detachment of the embellisher.

Embellisher assembly

Caution

When fitting the mudguard embellisher, it is necessary to pull the two ends apart slightly, to avoid damage to the mudguard painted surfaces.

1. Position the embellisher to the mudguard, then fit and tighten the screw to **3 Nm**.
2. Working inside the mudguard, fit star washers to each side of the embellisher.
3. Thoroughly clean the area beneath the Triumph sticker.
4. Peel the backing from a new sticker then fix it to the space on the embellisher.

Installation

1. Manoeuvre the mudguard into position between the forks.
2. Fit and tighten the mudguard fixings to **27 Nm**.
3. Position the mudguard shrouds to the forks.
4. Fit and tighten the shroud fixings to **9 Nm**.
5. Refit the brake hoses to the clips on each side of the mudguard.

Front Mudguard - Rocket III Touring

Removal

Warning

Before starting work, ensure the motorcycle is stabilised and adequately supported. This will help prevent it from falling and causing injury to the operator or damage to the motorcycle.

1. Remove the front wheel (see page *16-10*).
2. Release the mudguard fixings and manouvre the mudguard downwards to remove.

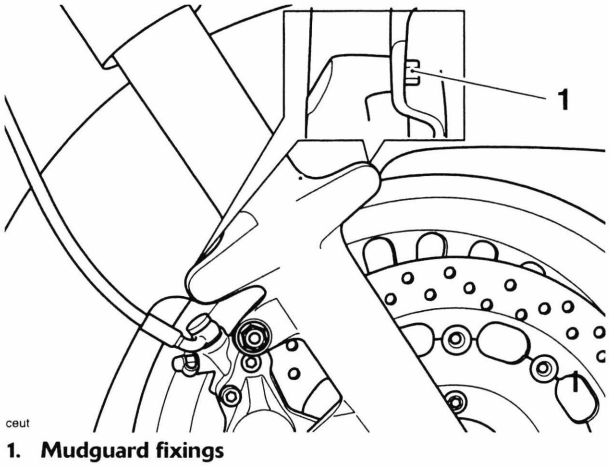

ceut

1. **Mudguard fixings**

Installation

1. Manoeuvre the mudguard into position between the forks.
2. Position the rubber sleeves, flanged sleeves and washers in the order as shown below.

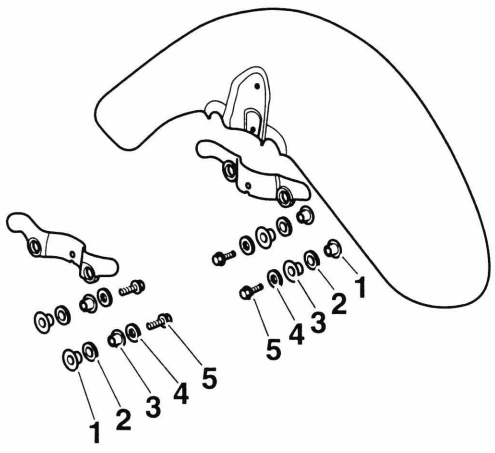

1. **Flanged sleeve**
2. **Rubber washer**
3. **Rubber sleeve**
4. **Steel washer**
5. **Mudguard fixing**

Fit the front mudguard, ensure the fixings are assembled to the mudguard as shown below.

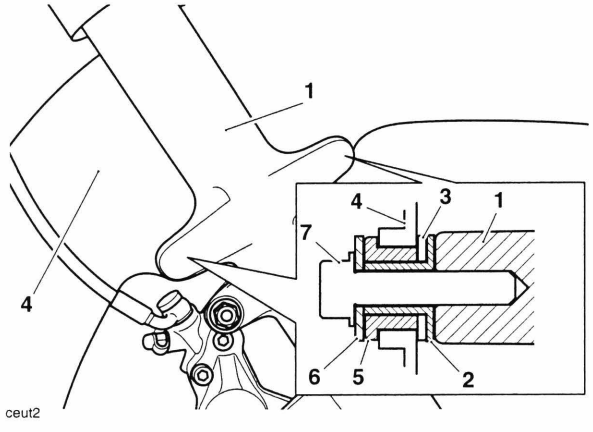

1. **Front fork**
2. **Flanged sleeve**
3. **Rubber washer**
4. **Front mudguard**
5. **Rubber sleeve**
6. **Steel washer**
7. **Mudguard fixing**

3. Tighten the mudguard fixings to **19 Nm**.
4. Refit the front wheel (see page *16-10*).

Rear Mudguard - Rocket III, Classic and Roadster

Removal

Warning

Before starting work, ensure the motorcycle is stabilised and adequately supported. This will help prevent it from falling and causing injury to the operator or damage to the motorcycle.

1. Remove the seats (see page *17-18*).
2. Disconnect the battery, negative (black) lead first.
3. Remove both side covers (see page *17-20*).
4. Trace the wiring back from the number plate light, rear indicators and rear light assembly and disconnect their wiring connectors from the main harness. The connections will be near to the engine management ECM on the right hand side of the motorcycle.

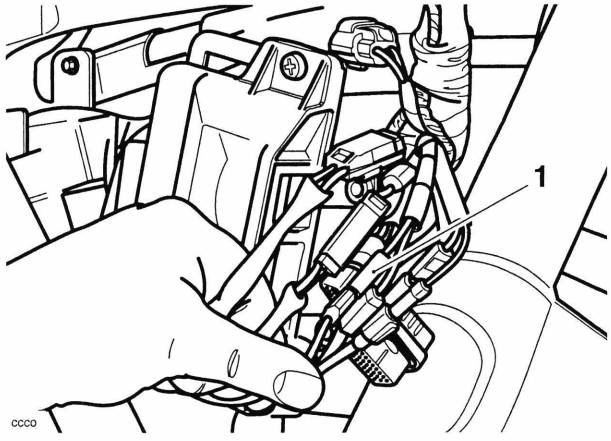

1. **Wiring connections**

Note:

- **Prior to disconnection, note the relative locations of the wires to their mating connectors.**

5. Release the two fixings from each side of the rear mudguard cover.

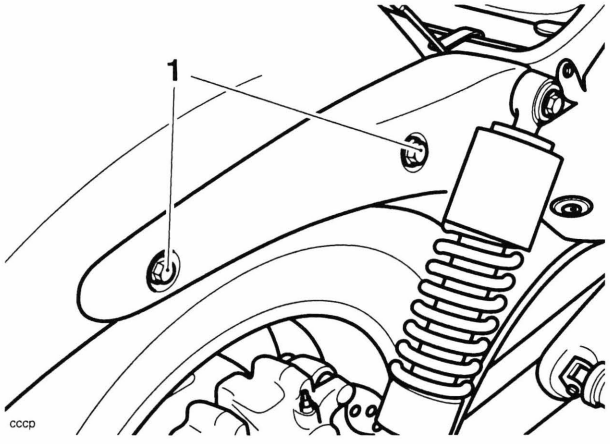

1. Rear mudguard cover fixings

Note:

- **After removal of the mudguard covers, the mudguard will not detach from the frame.**

6. Detach the mudguard covers from the both sides. The covers locate in a grommet at their forward edge.

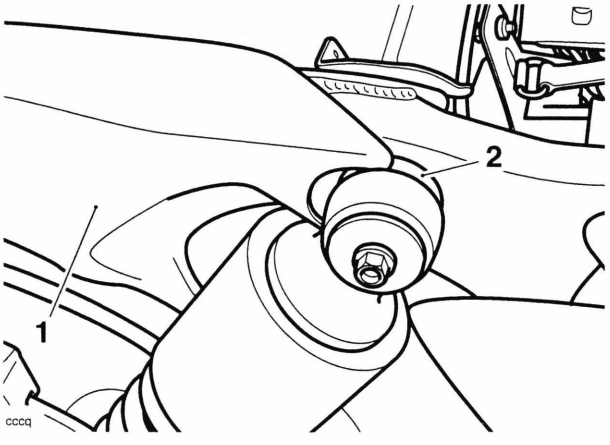

1. Mudguard cover
2. Grommet

7. Support the rear mudguard then release the remaining fixings (two per side) that secure the rear mudguard to the frame.

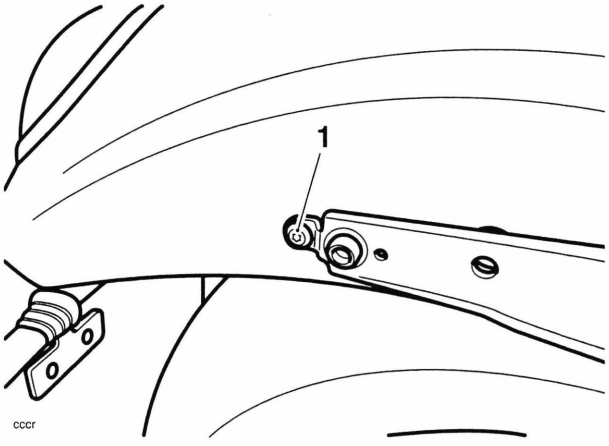

1. Mudguard fixings

8. Pivot the mudguard downwards at the rear. Lift the forward locating arms from the frame cross-tube to detach the mudguard completely.

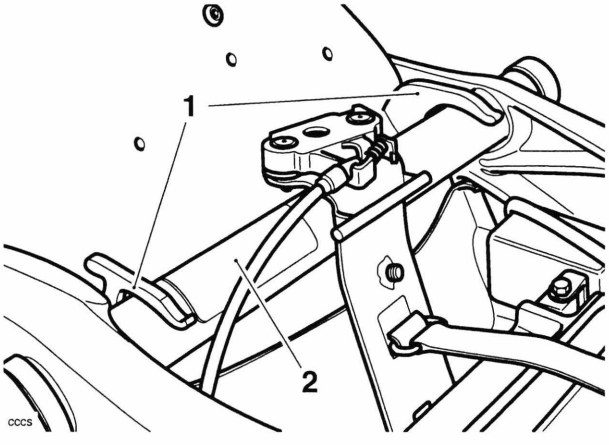

1. Locating arms
2. Frame cross tube

9. Release the fixings securing the mudguard brace to the mudguard.

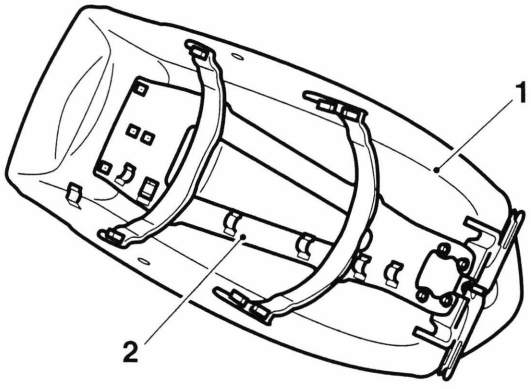

cccv

1. Mudguard
2. Mudguard brace

10. Detach the brace from within the mudguard.
11. The rear light, number plate light and indicators may all be removed by releasing the mounting plate, behind the rear lamp, inside the mudguard.

Installation

1. Locate the mudguard brace to the inside of the mudguard.
2. Fit and tighten the M6 x 12 mm fixings to **10 Nm**.
3. If removed, refit the rear light, number plate light and indicators to the rear mudguard. Tighten the fixings to **9 Nm**.

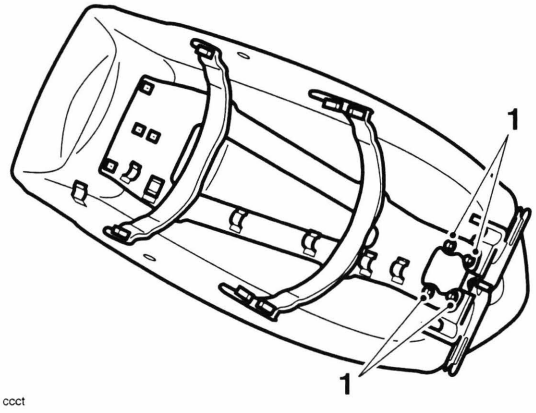

cccc

1. Rear light fixings

4. Locate the mudguard to the frame, positioning the locating arms above the frame cross tube.
5. Pivot the mudguard upwards at the rear and engage the two M6 x 16 mm fixings through the frame and into the mudguard.

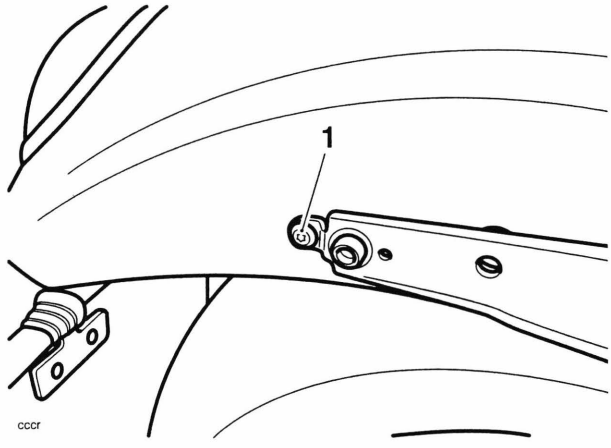

cccr

1. Fixing

6. Tighten the fixings to **9 Nm**.
7. Position the mudguard covers, engaging their forward edges to the grommets.

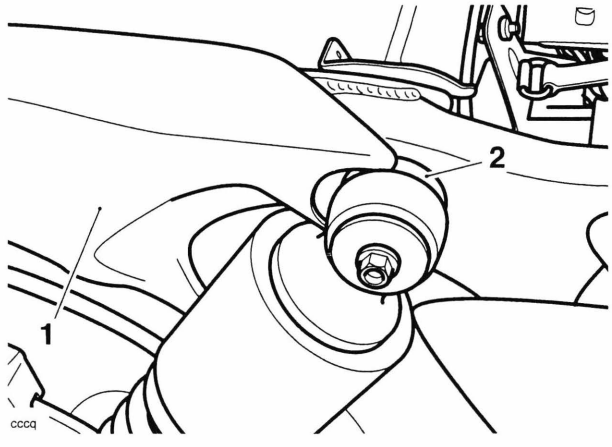

cccq

1. Cover
2. Grommet

8. Fit the mudguard cover fixings. Tighten the M8 fixings to **24 Nm** and the M10 fixings to **45 Nm**.

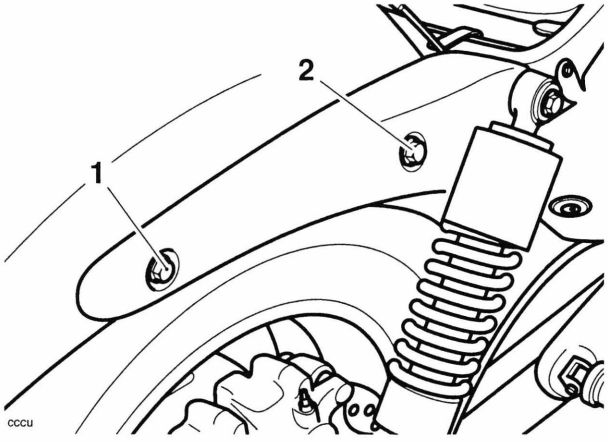

1. **M8 fixing**
2. **M10 fixing**

9. Reconnect the rear light, number plate light and indicators.
10. Reconnect the battery, positive (red) lead first.
11. Check that the rear light, number plate light and indicators all function correctly.
12. Refit the side covers (see page *17-21*).
13. Refit the seats (see page *17-18*).

Rear Mudguard - Rocket III Touring

Removal

Warning

Before starting work, ensure the motorcycle is stabilised and adequately supported. This will help prevent it from falling and causing injury to the operator or damage to the motorcycle.

1. Remove the seat (see page *17-19*).
2. Disconnect the battery, negative (black) lead first.
3. Remove both side covers (see page *17-20*).
4. Remove the panniers (see page *17-22*).
5. If fitted, remove the sissy bar assembly. With the sissy bar lock in the unlocked position, press both levers down and push the sissy bar assembly towards the front of the motorcycle to release and remove.

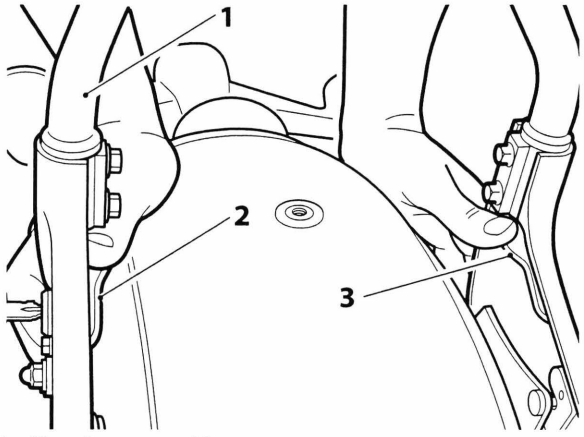

1. **Sissy bar assembly**
2. **Latch lever, right hand**
3. **Latch lever, left hand**

6. Release the pannier rail link fixings and remove the pannier rail link.

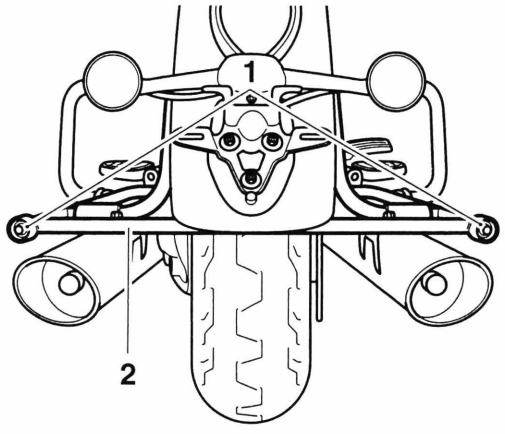

ceuw

1. **Pannier rail link fixings**
2. **Pannier rail link**

7. Trace the wiring back from the number plate light, rear indicators and rear light assembly and disconnect their wiring connectors from the main harness. The connections will be near to the engine management ECM on the right hand side of the motorcycle.

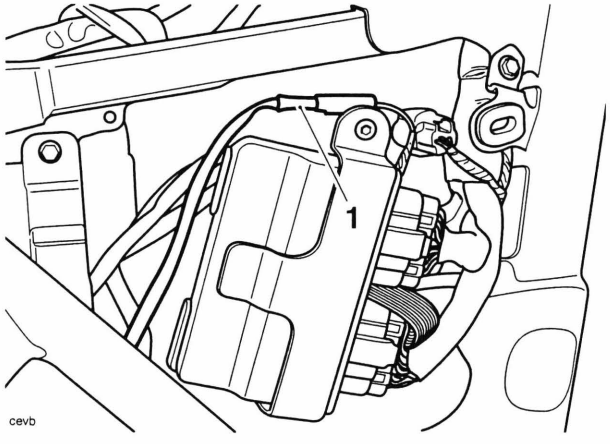

cevb

1. **Wiring connections**

Note:

- **Prior to disconnection, note the relative locations of the wires to their mating connectors.**

8. Release the two fixings from each side of the rear mudguard cover.

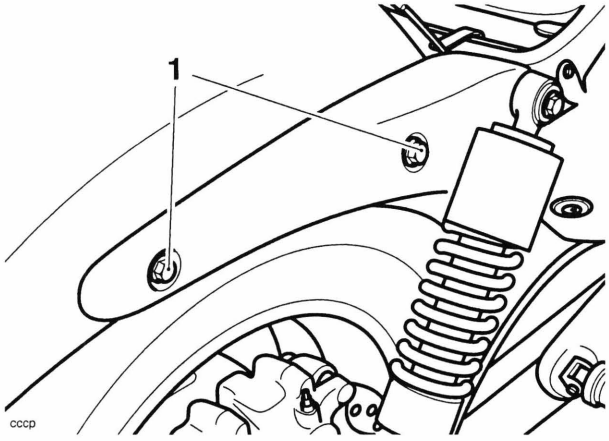

cccp

1. **Rear mudguard cover fixings**

Note:

- **After removal of the mudguard covers, the mudguard will not detach from the frame.**

9. Detach the mudguard covers from the both sides. The covers locate in a grommet at their forward edge.

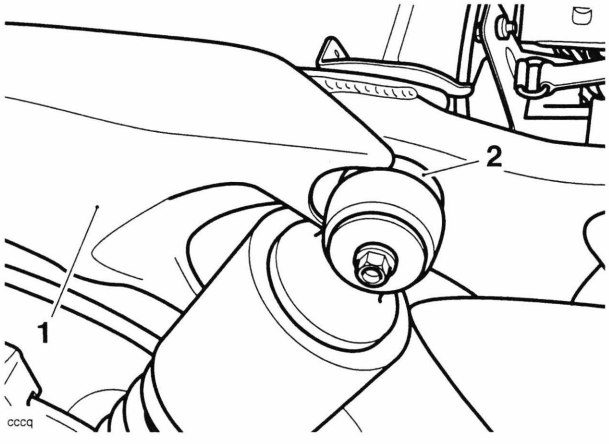

cccq

1. **Mudguard cover**
2. **Grommet**

10. If fitted, release the bolts, lock nuts and remove both mounting brackets for the sissy bar. Discard the lock nuts.

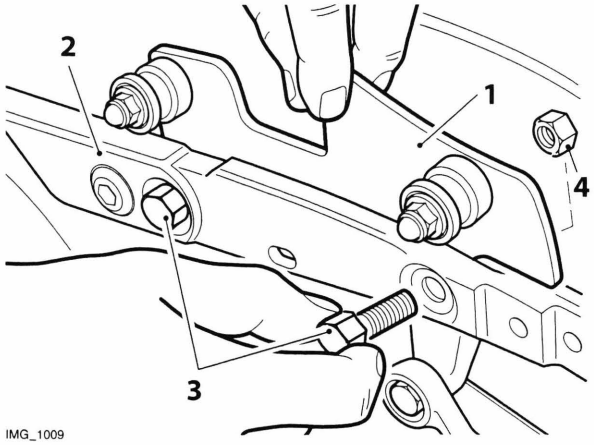

1. **Mounting bracket, left hand side shown**
2. **Motorcycle frame**
3. **Bolts**
4. **Lock nuts**

11. Support the rear mudguard then release the remaining fixings (one per side) that secure the rear mudguard to the frame.

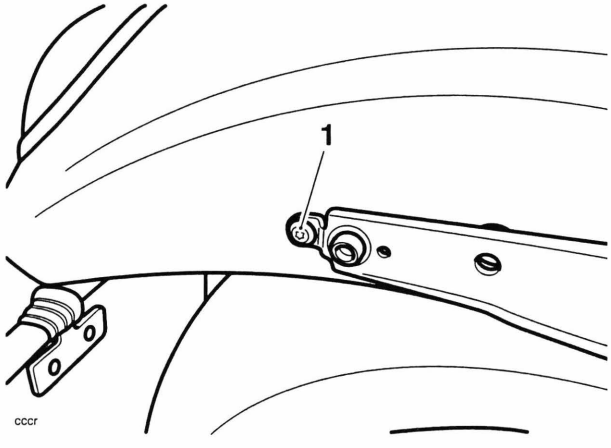

1. **Mudguard fixings**

12. Pivot the mudguard downwards at the rear. Lift the forward locating arms from the frame cross-tube to detach the mudguard completely.

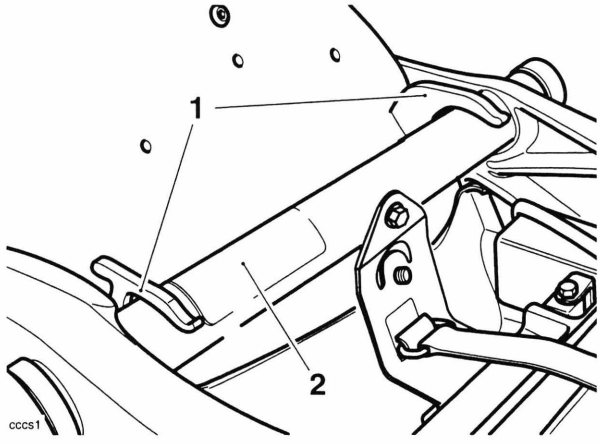

1. **Locating arms**
2. **Frame cross tube**

13. The number plate light and indicators assembly may be removed by releasing the three fixings.
14. The rear light, may be removed by releasing the three fixings.

Installation

1. If removed, refit the rear light to the rear mudguard. Tighten the fixings to **7 Nm**.
2. If removed, refit the number plate light and indicators assembly. Tighten the fixings to **9 Nm**.
3. Locate the mudguard to the frame, positioning the locating arms above the frame cross tube.
4. Pivot the mudguard upwards at the rear and engage the fixing through the frame and into the mudguard.

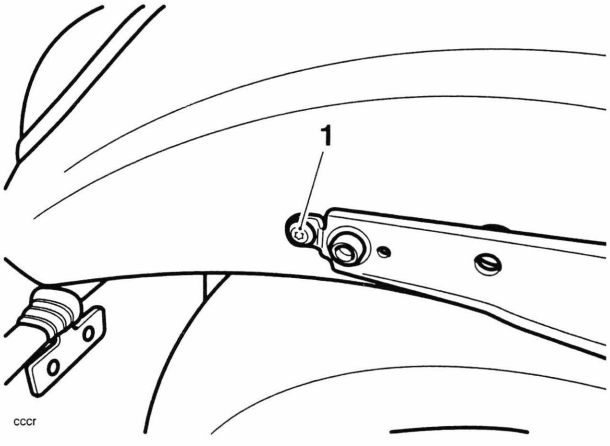

1. **Fixing**

5. Tighten the fixing to **9 Nm**.
6. If removed, refit both mounting brackets for the sissy bar and tighten their bolts and new lock nuts to **45 Nm**.

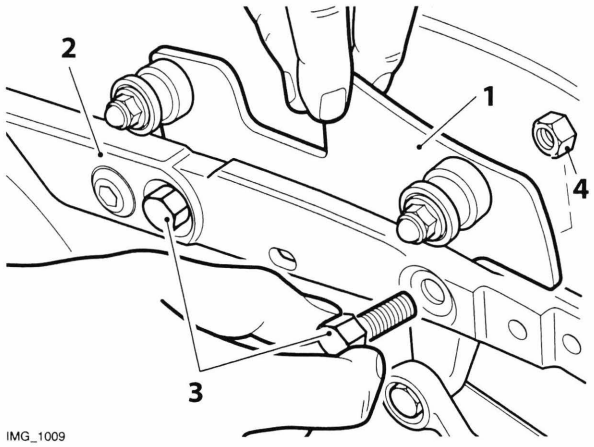

1. **Mounting bracket, left hand side shown**
2. **Motorcycle frame**
3. **Bolts**
4. **Lock nuts**

7. Position the mudguard covers, engaging their forward edges to the grommets.

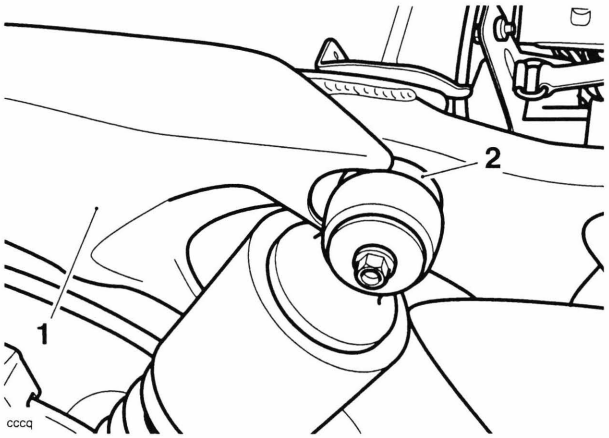

1. **Cover**
2. **Grommet**

8. Fit the mudguard cover fixings. Tighten the M8 fixings to **24 Nm** and the M10 fixings to **45 Nm**.

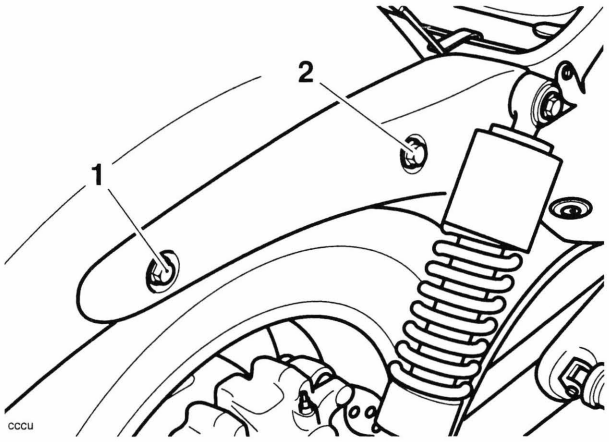

1. **M8 fixing**
2. **M10 fixing**

9. Reconnect the rear light, number plate light and indicators.
10. Reconnect the battery, positive (red) lead first.
11. Check that the rear light, number plate light and indicators all function correctly.
12. Refit the side covers (see page *17-21*).
13. Refit the seat (see page *17-19*).
14. Refit the pannier rail link. Tighten the fixings to **50 Nm**.
15. Refit panniers (see page *17-23*).
16. If removed, locate the sissy bar assembly onto the mounting plates ensuring the slots in the sissy bar side plates align with the mountings on the mounting plates.

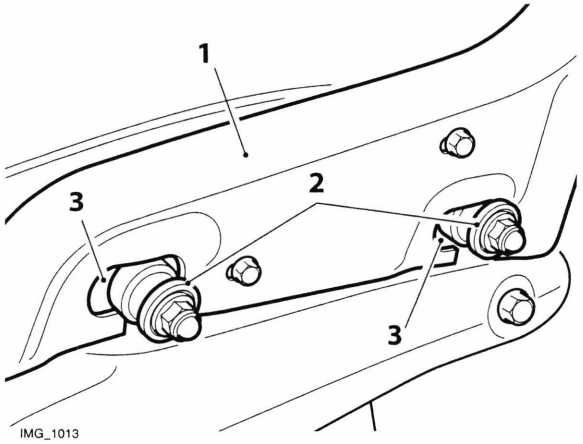

1. **Side plate, left hand side shown**
2. **Mountings**
3. **Slots**

17. Pull the sissy bar assembly back towards the rear of the motorcycle to lock in position. The left and right levers should move upwards.

Windscreen - Rocket III Touring

Removal

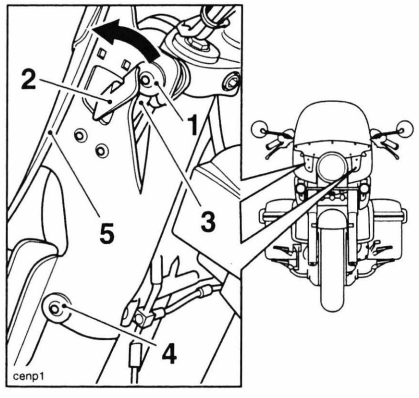

1. **Upper mounting**
2. **Lock handle**
3. **Lock**
4. **Lower mounting**
5. **Windscreen**

1. Stand astride the front wheel and pull the lock handles towards the windscreen to release the locks.
2. Lift the windscreen to detach it from the mountings.
3. If required, remove the windscreen mountings from the top and bottom yokes.

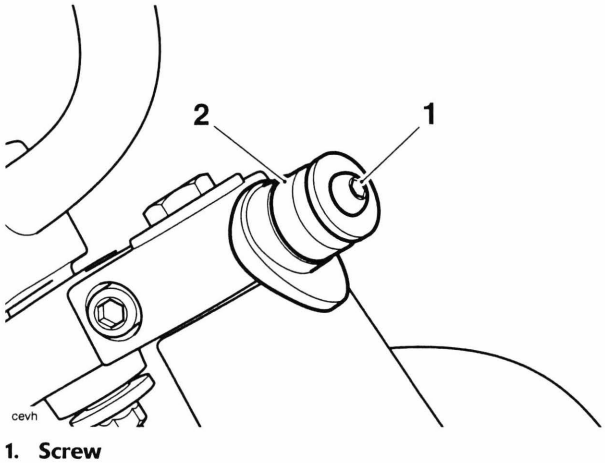

1. **Screw**
2. **Windscreen mounting**

Installation

1. If the windscreen mountings have been removed, refit the mountings to the top and bottom yokes. Tighten the screws to **15 Nm**.
2. Align the windscreen mounting slots to the mountings on the forks.

Note:

- **An audible click can be heard when the locks are engaged.**

3. Slide the windscreen down until the upper mountings are locked into position.

Warning

To prevent detachment of the windscreen during riding, after fitting grasp the windscreen and pull firmly upwards. If the windscreen locks are not correctly secured the windscreen will detach from the locks. A loose or detached windscreen could cause loss of motorcycle control and an accident.

Handlebars - Rocket III, Classic and Roadster

Warning

Before starting work, ensure the motorcycle is stabilised and adequately supported. This will help prevent it from falling and causing injury to the operator or damage to the motorcycle.

Removal

1. Undo the fixing screws and remove the end weights from the handlebars.

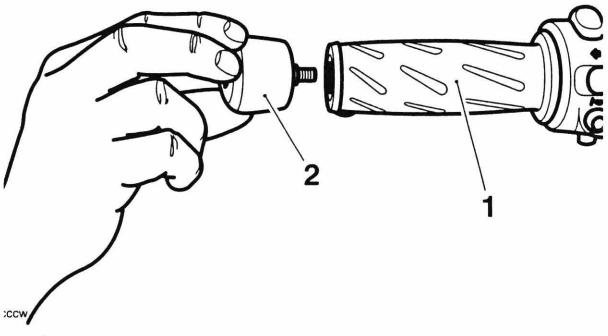

1. **Handlebar**
2. **End weight assembly**

Note:

- **Each end weight assembly consists of the end weight, two damper bushes, a stepped sleeve, a finisher and a fixing screw.**

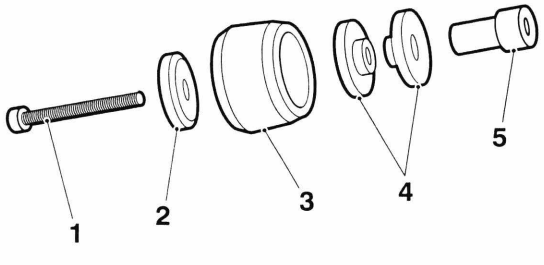

1. **Fixing screw**
2. **Finisher**
3. **End weight**
4. **Damper bushes**
5. **Stepped sleeve**

2. Release the wiring and brake hose from its clips on either side of the handlebar.
3. Undo the screws and free the left switchgear assembly from the handlebar.
4. Unscrew the bolts and remove the clamp from the clutch lever assembly.
5. Undo the screws and free the right switchgear assembly from the front brake master cylinder. Free the switch wiring from the handlebars.
6. Unscrew the bolts and remove the clamp from the master cylinder.

Note:

- **For Rocket III and Classic models up to VIN 241569 continue from step 7 to step 10.**
- **For Rocket III, Classic and Roadster models from VIN 241570 continue from step 11 to step 14.**

Rocket III and Classic models up to VIN 241569

7. Release the two screws securing the upper cover of the handlebar clamp to the lower section.

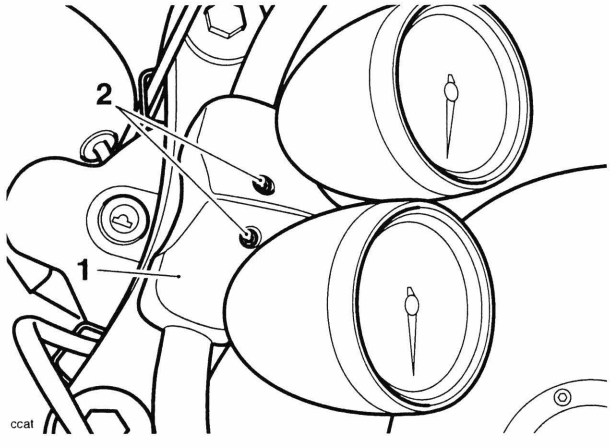

1. **Upper cover**
2. **Screws**

8. Pivot the instruments forward to reveal the handlebar clamp bolts.

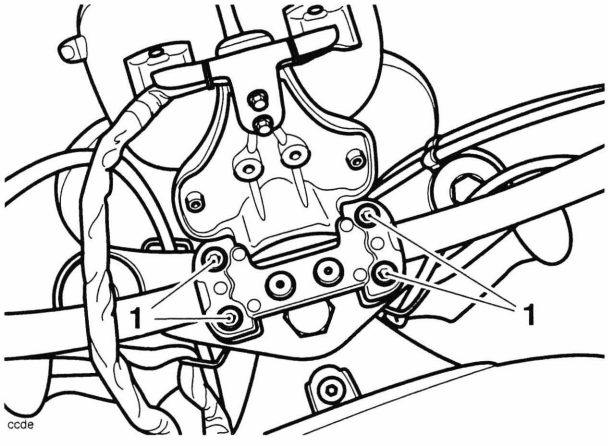

1. Handlebar clamp bolts

9. Support the handlebars then unscrew the bolts and lift off the handlebar clamp, together with the instruments. Protect the top of the fuel tank from accidental damage and then lay the instruments and clamp on the fuel tank.
10. Free the handlebar from the twist-grip/master cylinder assembly and remove it from the motorcycle. Support the master cylinder in an upright position.

Rocket III, Classic and Roadster models from VIN 241570

11. Remove the chrome cover from the instrument bracket.

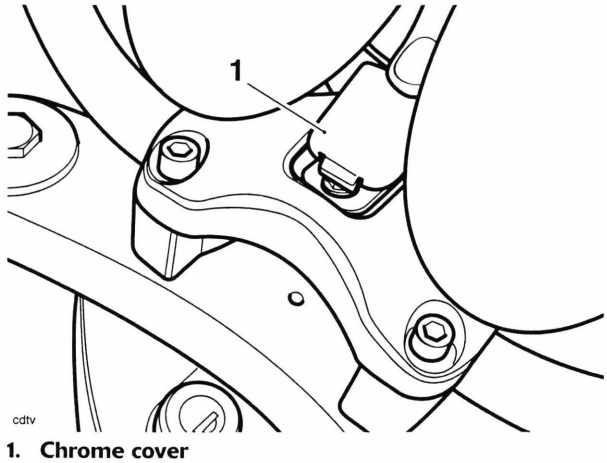

1. Chrome cover

12. Release the two fixings securing the instrument and bracket assembly to the handlebar clamp and slide the instrument assembly free. Protect the motorcycle from damage and position the instruments clear of the handlebars.

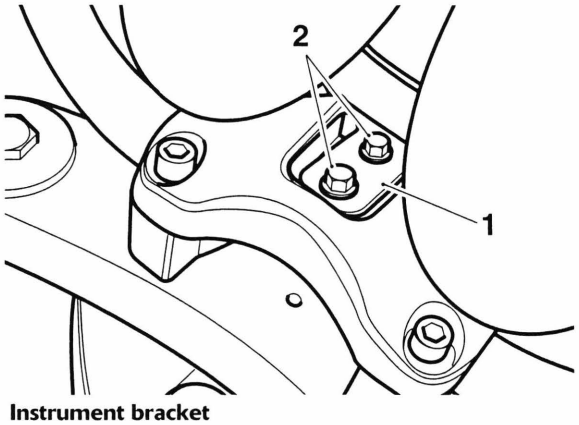

1. Instrument bracket
2. Fixings

13. Undo and remove the four fixings securing the handlebar clamp and remove the clamp.

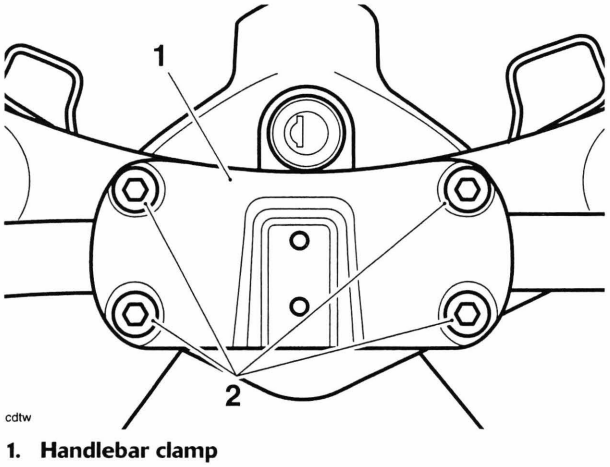

1. Handlebar clamp
2. Fixings

14. Free the handlebar from the twist-grip/master cylinder assembly and remove it from the motorcycle. Support the master cylinder in an upright position.

Installation

1. Fit the throttle twist-grip assembly then locate the handlebars in the lower halves of the clamp. Fit the clamp and bolts together with the instruments.
2. Align the handlebar punch mark with the lower-rear inner left hand split line of the clamp.
3. **Rocket III and Classic models up to VIN 241569:** Tighten the front clamp bolts to **26 Nm**, then the rears.
4. **Rocket III, Classic and Roadster models from VIN 241570:** Tighten the front clamp bolts to **45 Nm**, then the rears.

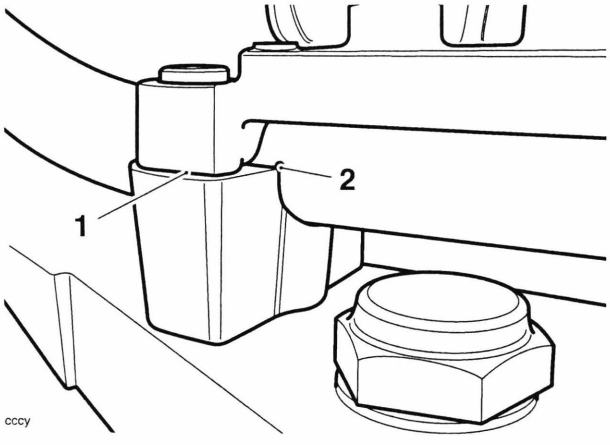

1. **Clamp split line**
2. **Handlebar punch mark**

5. **Rocket III and Classic models up to VIN 241569:** Pivot the instruments into position then fit and tighten the cover bolts to **3 Nm**.
6. **Rocket III, Classic and Roadster models from VIN 241570:** Position the instrument and bracket assembly to the handlebar clamp and secure with the two screws. Tighten the screws to **9 Nm**.
7. Fit the chrome cover to the instrument bracket.
8. Locate the clutch lever assembly to the handlebar and fit the clamp.
9. Align the clamp lower split line with the punch mark on the handlebar then tighten the clamp bolts to **12 Nm**.

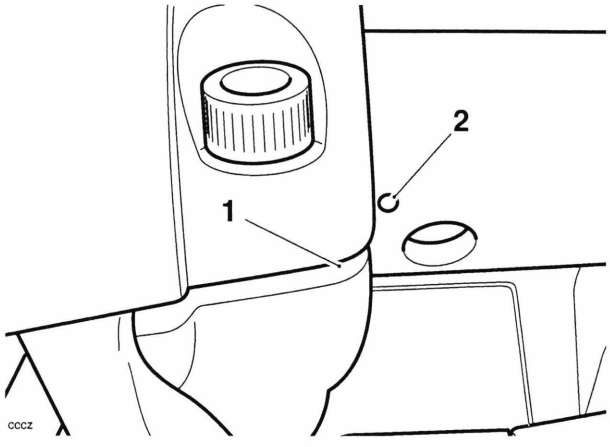

1. **Clamp lower split line**
2. **Handlebar dot mark**

10. Fit the clamp to the front brake master cylinder.
11. Align the clamp lower split line with the punch mark on the handlebar then evenly tighten the clamp bolts to **12 Nm**.

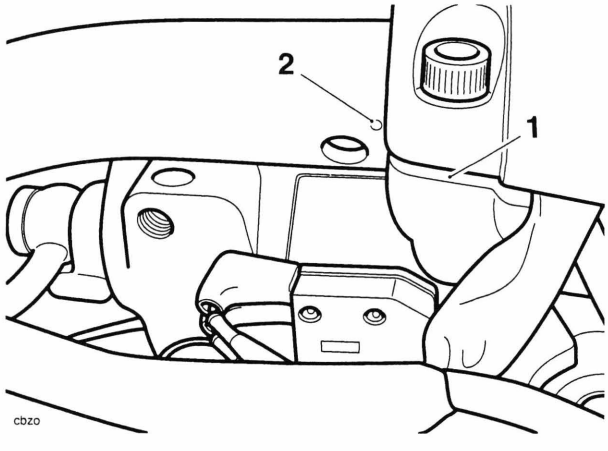

1. **Clamp lower split line**
2. **Handlebar dot mark**

12. Refit the left hand switchgear assembly, tightening the screws to **2.5 Nm**.
13. Refit the right hand switchgear assembly, tightening the screws to **2.5 Nm**.

14. Assemble the handlebar end weights into the handlebar ends, and tighten the fixings to **8 Nm**.

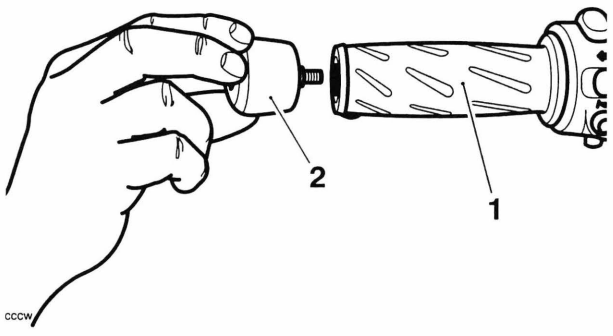

1. **Handlebar**
2. **End weight assembly**

15. Renew any damaged clips before refitting all wiring and the front brake hose to the clips.
16. Check that the throttle opens and closes smoothly without sticking. Rectify as necessary.

Warning

Operation of the motorcycle with incorrectly adjusted, incorrectly routed or damaged throttle cables could interfere with the operation of the brakes, clutch or the throttle itself. Any of these conditions could result in loss of control of the motorcycle and an accident.

Warning

Move the handlebars to left and right full lock while checking that cables and harnesses do not bind or that the steering feels tight or difficult to turn. A cable or harness that binds, or steering that is tight/difficult to turn will restrict the steering and may cause loss of control and an accident.

Handlebar - Rocket III Touring

Warning

Before starting work, ensure the motorcycle is stabilised and adequately supported. This will help prevent it from falling and causing injury to the operator or damage to the motorcycle.

Removal

1. Remove the windscreen (see page *17-33*).
2. Undo the fixing screws and remove the end weights from the handlebars.

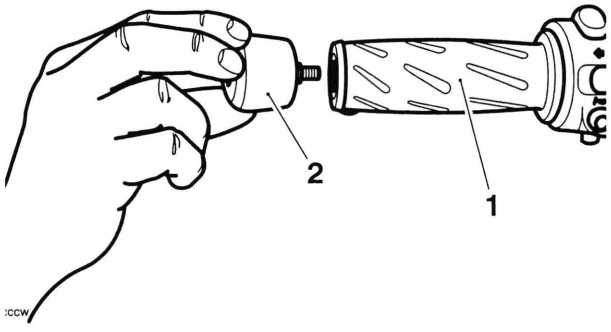

1. **Handlebar**
2. **End weight assembly**

Note:

- **Each end weight assembly consists of the end weight, two damper bushes, a stepped sleeve, a finisher and a fixing screw.**

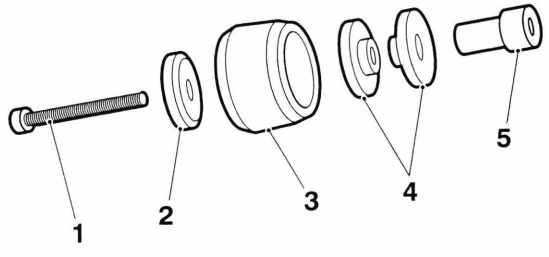

1. **Fixing screw**
2. **Finisher**
3. **End weight**
4. **Damper bushes**
5. **Stepped sleeve**

3. Release the wiring and brake hose from its clips on either side of the handlebar.
4. Undo the screws and free the left switchgear assembly from the handlebar.
5. Unscrew the bolts and remove the clamp from the clutch lever assembly.
6. Undo the screws and free the right switchgear assembly from the handlebar. Free the switch wiring from the handlebars.
7. Unscrew the bolts and remove the clamp from the master cylinder. Remove and support the master cylinder in an upright position.
8. Remove the bolt covers from the handlebar clamp bolts.
9. Undo and remove the bolts securing the handlebar clamps and remove the clamps.

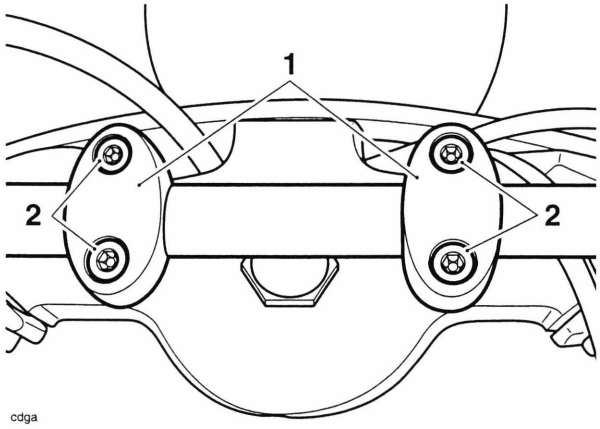

cdga

1. Handlebar clamps
2. Handlebar clamp bolts

10. Free the handlebar from the twist-grip and remove it from the motorcycle.

Installation

1. Fit the throttle twist-grip then locate the handlebars in the lower halves of the clamp.
2. Align the handlebar punch mark with the lower-front inner left hand split line of the clamp.

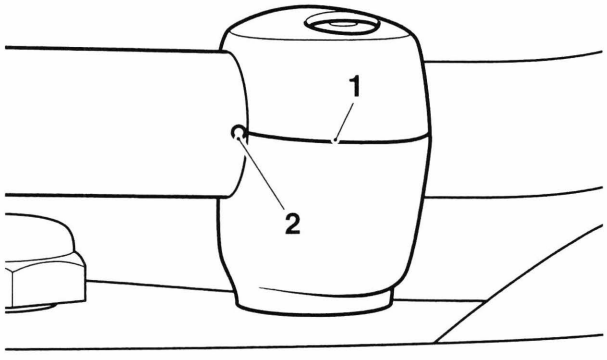

ceuz

1. Clamp split line
2. Handlebar punch mark

3. Tighten the front clamp bolts to **26 Nm**, then the rears.
4. Refit the handlebar clamps bolts covers.
5. Locate the clutch lever assembly to the handlebar and fit the clamp.
6. Align the clamp upper split line with the punch mark on the handlebar then tighten the clamp bolts to **12 Nm**.

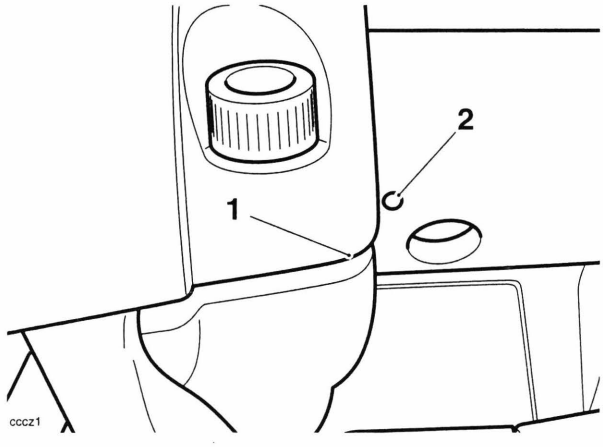

cccz1

1. Clamp upper split line
2. Handlebar dot mark

7. Align the front brake master cylinder to the handlebar and fit the clamp to the front brake master cylinder.

8. Align the clamp upper split line with the punch mark on the handlebar then evenly tighten the clamp bolts to **12 Nm**.

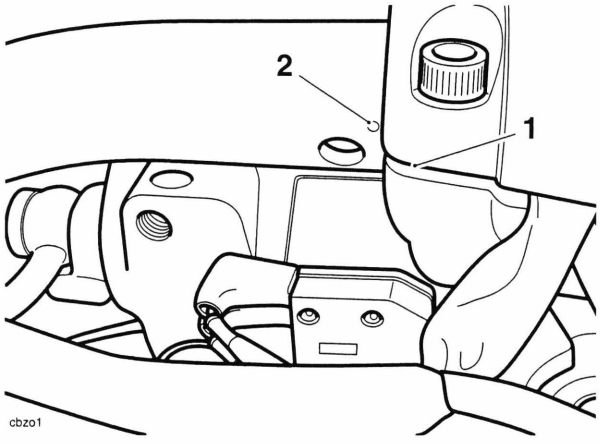

1. **Clamp upper split line**
2. **Handlebar dot mark**

9. Refit the left hand switchgear assembly, tightening the screws to **2.5 Nm**.
10. Refit the right hand switchgear assembly, tightening the screws to **2.5 Nm**.
11. Assemble the handlebar end weights into the handlebar ends, and tighten the fixings to **8 Nm**.

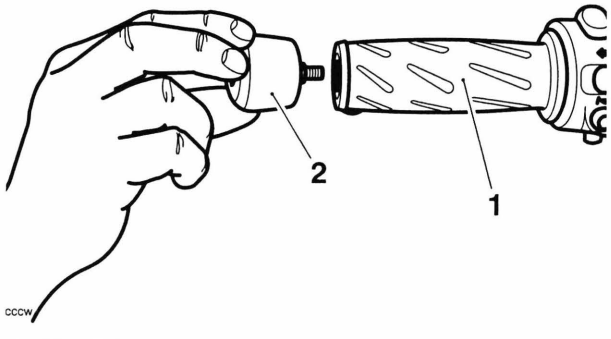

1. **Handlebar**
2. **End weight assembly**

12. Renew any damaged clips before refitting all wiring and the front brake hose to the clips.
13. Check that the throttle opens and closes smoothly without sticking. Rectify as necessary.
14. Refit the windscreen (see page *17-33*).

⚠ Warning

Operation of the motorcycle with incorrectly adjusted, incorrectly routed or damaged throttle cables could interfere with the operation of the brakes, clutch or the throttle itself. Any of these conditions could result in loss of control of the motorcycle and an accident.

⚠ Warning

Move the handlebars to left and right full lock while checking that cables and harnesses do not bind or that the steering feels tight or difficult to turn. A cable or harness that binds, or steering that is tight/difficult to turn will restrict the steering and may cause loss of control and an accident.

Mirrors

Removal

1. Remove the mirror screw and collect the wavy washer.
2. Using a twisting action, remove the mirror in an upwards direction.
3. Remove and discard the tolerance ring.

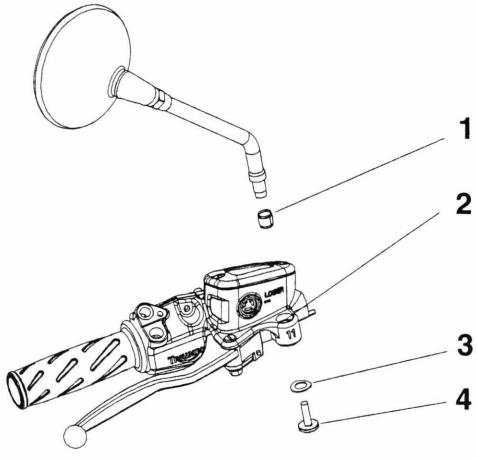

1. **Tolerance ring**
2. **Mirror mounting location**
3. **Wavy washer**
4. **Mirror screw**

Installation

1. Push a new tolerance ring into the recess in the mirror mounting location.
2. Insert the mirror into the tolerance ring.
3. Working from below the mirror, carefully position Triumph service tool T3880007 centrally over the mirror stem bore with the handle of the tool angled downwards.

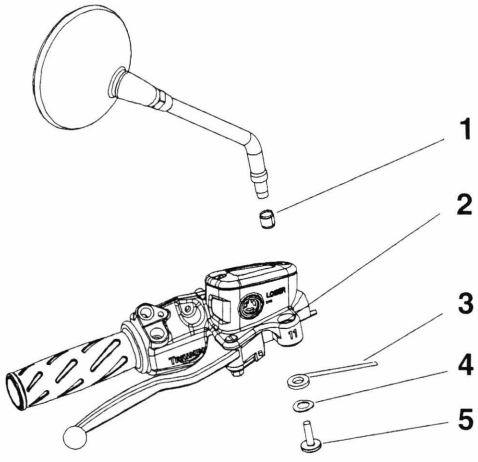

1. **Tolerance ring**
2. **Mirror mounting location**
3. **Tool T3880007**
4. **Wavy washer**
5. **Mirror screw**

4. Fit and tighten the mirror screw to **10 Nm** whilst ensuring that the tolerance ring is drawn evenly into the hole in the mirror stem bore.
5. Remove the screw and tool. Ensure that the mirror stem has approximately 1.5 mm pull through visible underneath the mirror stem bore.
6. Fit the wavy washer and re-tighten the mirror screw to **10 Nm**.

Side Stand

Removal

Warning

Before starting work, ensure the motorcycle is stabilised and adequately supported. This will help prevent it from falling and causing injury to the operator or damage to the motorcycle.

1. Raise and support the motorcycle.
2. Un-hook the spring from the side stand and remove it from the motorcycle.

Warning

Wear hand, eye and face protection when un-hooking the stand spring. Take great care to minimise the risk of personal injury and loss of components.

3. Unscrew the nut from the side stand pivot bolt.
4. Unscrew the pivot bolt and remove the stand from the bike.

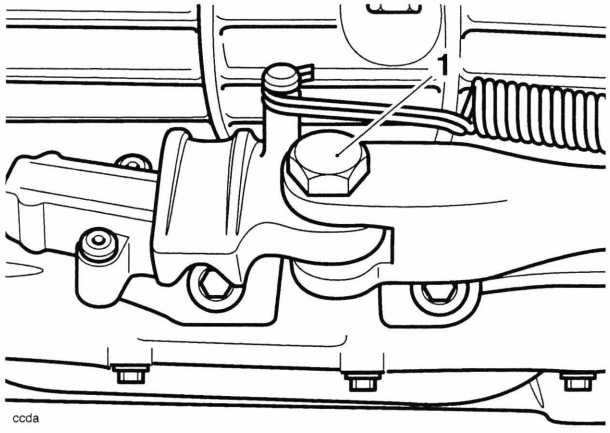

1. Pivot bolt

Installation

1. Lubricate the pivot bolt shoulder and side stand pivot with multi-purpose grease.
2. Fit the stand to the bike and insert the pivot bolt, tightening it to **25 Nm**.
3. Fit the locknut to the pivot bolt and tighten it to **25 Nm**.
4. Hook the spring onto its frame lug then carefully hook it onto the stand lug.

Warning

Wear hand, eye and face protection when fitting the stand spring. Take great care to minimise the risk of personal injury and loss of components.

5. Check the operation of the side stand before riding the motorcycle. Ensure the spring holds the stand securely in the retracted position.

This page intentionally left blank

18 Electrical System

Table of Contents

Exploded View - Instruments - Rocket III and Classic. 18.5
Exploded View - Instruments - Rocket III Touring. 18.6
Exploded View - Instruments - Rocket III Roadster 18.7
Exploded View - Alternator 18.8
Exploded View - Starter Motor 18.9
Exploded View - Headlight - Rocket III, Classic and Roadster 18.10
Exploded View - Headlight - Rocket III Touring 18.11
Exploded View - Rear Light and Indicators - Rocket III, Classic and Roadster. 18.12
Exploded View - Rear Lights - Rocket III Touring 18.13
Exploded View - Indicators - Rocket III Touring 18.14
Exploded View - Auxiliary Lights and Front Indicators - Rocket III Touring (If Auxiliary Light is Fitted) 18.15
Exploded View - Battery, Horn and Wiring - Rocket III and Classic 18.16
Exploded View - Battery, Horn and Wiring - Rocket III Touring 18.17
Exploded View - Battery, Horn and Wiring - Rocket III Roadster 18.18
Battery 18.19
- Battery Disposal 18.19
- Battery Removal 18.19
- Battery Installation 18.19

Battery Commissioning and Charging 18.20
- New Battery 18.20
- Battery Maintenance 18.21
- Battery Already in Service 18.21
- Table of Battery Charging Times 18.21
- Fuses 18.22
- Fuse Box - Rocket III and Classic 18.22
- Fuse Box - Rocket III Roadster with a fuse at position 9. . . . . 18.23
- Fuse Box - Rocket III Roadster without a fuse at position 9 . . . . . 18.24
- Fuse Identification - Rocket III Roadster - ABS 18.24
- Fuse Box - Rocket III Touring 18.25
- Fuse Identification - Rocket III Touring 18.25

Headlights 18.26
Headlight Vertical Adjustment - Rocket III, Classic and Roadster 18.26
Headlight Horizontal Adjustment - Rocket III, Classic and Roadster 18.26
Headlight Vertical Adjustment - Rocket III Touring 18.27
Headlight Horizontal Adjustment - Rocket III Touring 18.27
Headlight Bulb Replacement 18.28
Auxiliary Lights - Rocket III Touring (if Fitted) 18.29
Bulb Replacement 18.29
Rear Light 18.30
Bulb Replacement 18.30
Indicator Lights 18.31
Bulb Replacement - Rocket III, Classic and Roadster 18.31
Bulb Replacement - Rocket III Touring 18.31
Instruments 18.32
Rocket III, Classic and Roadster 18.32
Removal 18.32
Installation 18.32
Rocket III Touring 18.33
Removal 18.33
Installation 18.33
Fuel Gauge 18.34
Calibration-Rocket III Touring 18.34
Alternator 18.34
Removal 18.34
Inspection 18.35
Assembly 18.36
Alternator Rectifier 18.37
Removal 18.37
Installation 18.37
Starter Motor 18.37
Removal 18.37
Installation 18.38
Relays 18.38
Identification and location 18.38
Relay identification – left hand side 18.38
Relay identification – right hand side - Rocket III, Classic and Roadster 18.39
Relay identification – right hand side - Rocket III Touring 18.39
Headlamp Relay and Fly lead - Rocket III Roadster from VIN 322159 to VIN 482858 and from VIN 500141 to VIN 503166 ..... 18.39
ECM Connector Pin Numbering - Rocket III and Classic 18.45
ECM Connector Pin Numbering - Rocket III Touring 18.45
Alternator Stator 18.46
Rectifier/Regulator 18.48

Lighting Circuit - Rocket III and Classic 18.50
Key to Circuit Diagram 18.50
Key To Wiring Colour Codes 18.50
Circuit Diagram - Lighting - Rocket III and Classic 18.51
Lighting Circuit - Rocket III Touring 18.52
Key to Circuit Diagram 18.52
Key To Wiring Colour Codes 18.52
Circuit Diagram - Lighting - Rocket III Touring 18.53
Lighting Circuit - Rocket III Roadster 18.54
Key to Circuit Diagram 18.54
Key To Wiring Colour Codes 18.54
Circuit Diagram - Lighting - Rocket III Roadster 18.55
Lighting Circuit - Rocket III Roadster with headlight relay 18.56
Key to Circuit Diagram 18.56
Key To Wiring Colour Codes 18.56
Circuit Diagram - Lighting - Rocket III Roadster with headlight relay 18.57
Starting and Charging Circuit - Rocket III and Classic 18.58
Key to Circuit Diagram 18.58
Key To Wiring Colour Codes 18.58
Circuit Diagram - Starting and Charging - Rocket III and Classic 18.59
Starting and Charging Circuit - Rocket III Touring 18.60
Key to Circuit Diagram 18.60
Key To Wiring Colour Codes 18.60
Circuit Diagram - Starting and Charging - Rocket III Touring 18.61
Starting and Charging Circuit without Headlight Relay - Rocket III Roadster 18.62
Key to Circuit Diagram 18.62
Key To Wiring Colour Codes 18.62
Circuit Diagram - Starting and Charging without Headlight Relay - Rocket III Roadster 18.63
Starting and Charging Circuit with Headlight Relay - Rocket III Roadster 18.64
Key to Circuit Diagram 18.64
Key To Wiring Colour Codes 18.64
Starting and Charging Circuit with Headlight Relay - Rocket III Roadster 18.65
Auxiliary and Accessory Circuit - Rocket III and Classic 18.66
Key to Circuit Diagram 18.66
Key To Wiring Colour Codes 18.66
Circuit Diagram - Auxiliary and Accessory - Rocket III and Classic 18.67
Auxiliary and Accessory Circuit - Rocket III Touring 18.68
Key to Circuit Diagram 18.68
Key To Wiring Colour Codes 18.68
Circuit Diagram - Auxiliary and Accessory - Rocket III Touring 18.69
Auxiliary and Accessory Circuit - Rocket III Roadster 18.70
Key to Circuit Diagram 18.70
Key To Wiring Colour Codes 18.70
Circuit Diagram - Auxiliary and Accessory - Rocket III Roadster 18.71

Complete System - Rocket III and Classic with / without Instrument modification 18.72
Key to Circuit Diagram 18.72
Circuit Diagram - Complete System - Rocket III and Classic with / without Instrument modification 18.73
Complete System - Rocket III Touring - without ABS 18.74
Key to Circuit Diagram 18.74
Circuit Diagram - Complete System - Rocket III Touring - without ABS 18.75
Complete System - Rocket III Touring - with ABS 18.76
Key to Circuit Diagram 18.76
Circuit Diagram - Complete System - Rocket III Touring - with ABS 18.77
Complete System -Rocket III Roadster up to VIN 482857 and from VIN 500141 to VIN503166 ..... 18.78
Key to Circuit Diagram 18.78
Circuit Diagram - Complete System - Rocket III Roadster up to VIN 482857 and from VIN 500141 to VIN503166 ..... 18.79
Complete System -Rocket III Roadster from VIN 482858 to VIN 500140 and from VIN 503167 ..... 18.80
Key to Circuit Diagram 18.80
Circuit Diagram - Complete System - Rocket III Roadster from VIN 482858 to VIN 500140 and from VIN 503167 ..... 18.81

Exploded View - Instruments - Rocket III and Classic

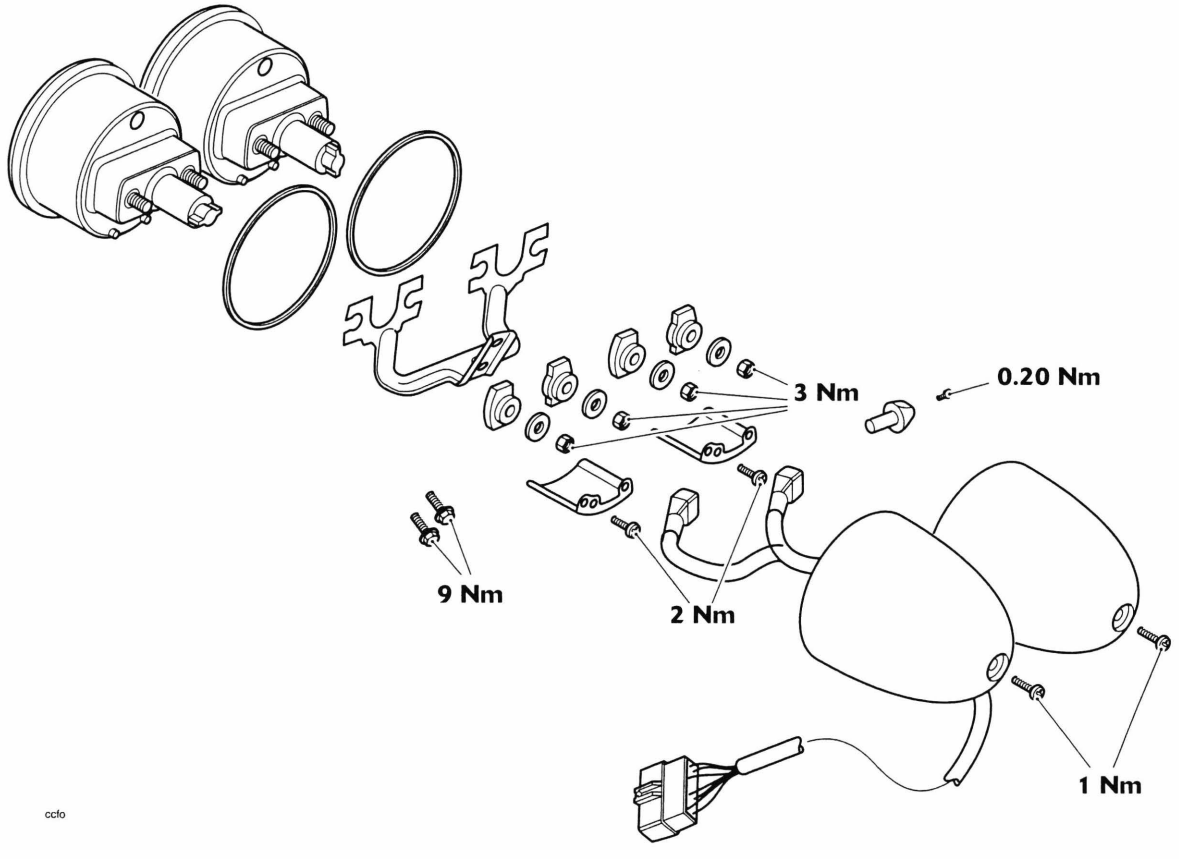

Exploded View - Instruments - Rocket III Touring

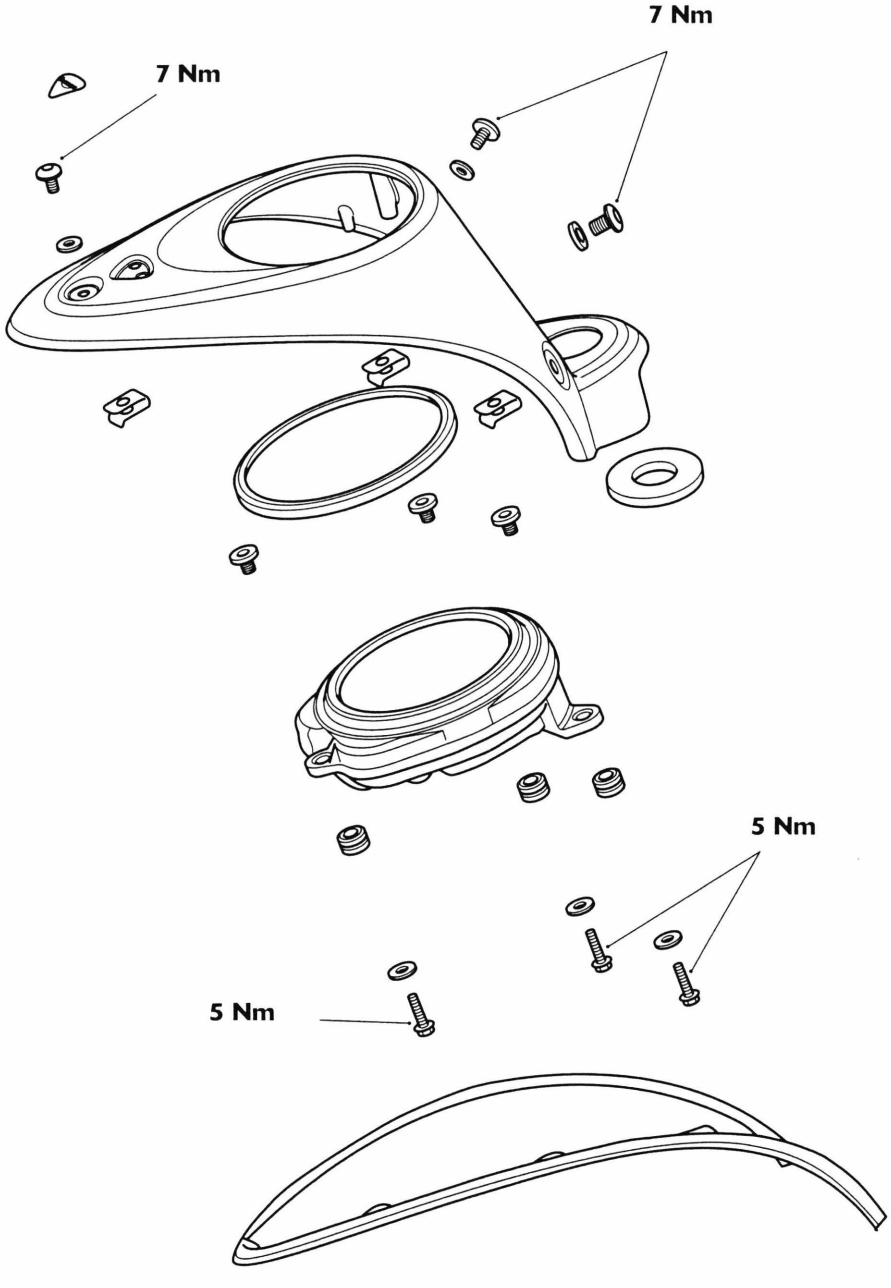

aazc

Exploded View - Instruments - Rocket III Roadster

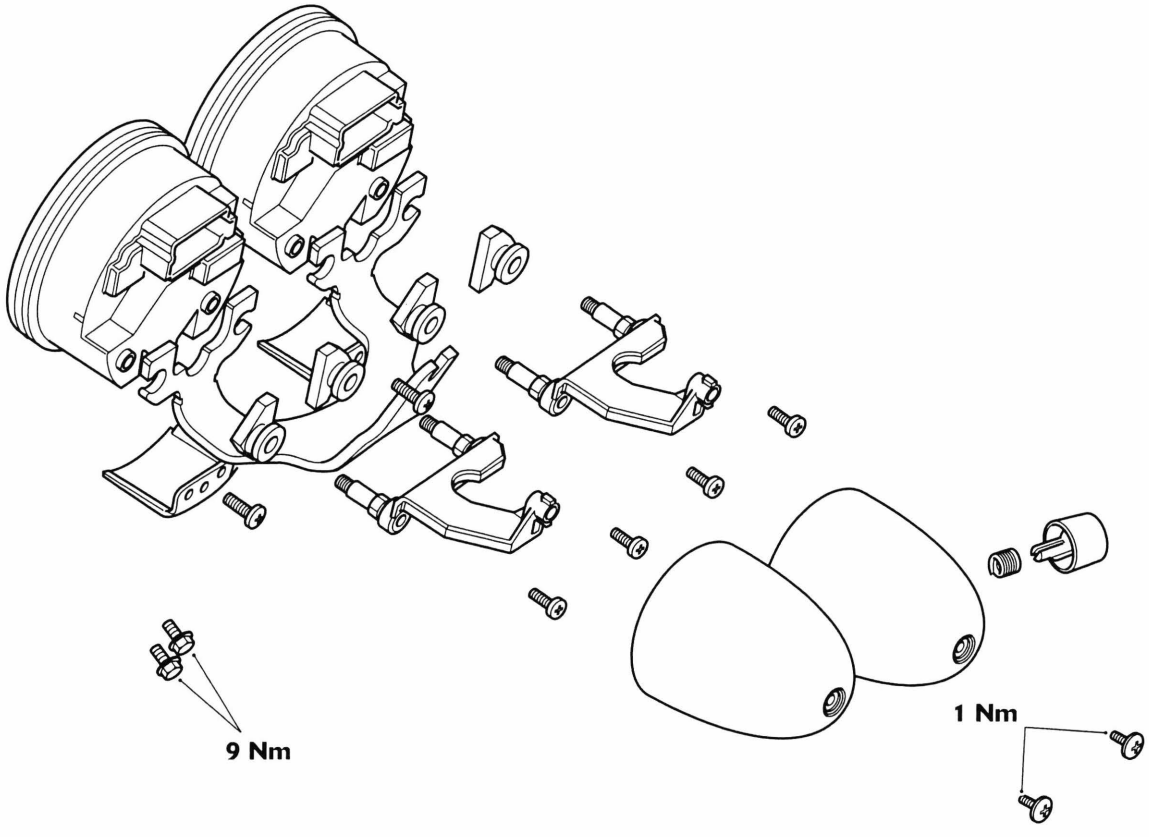

Exploded View - Alternator

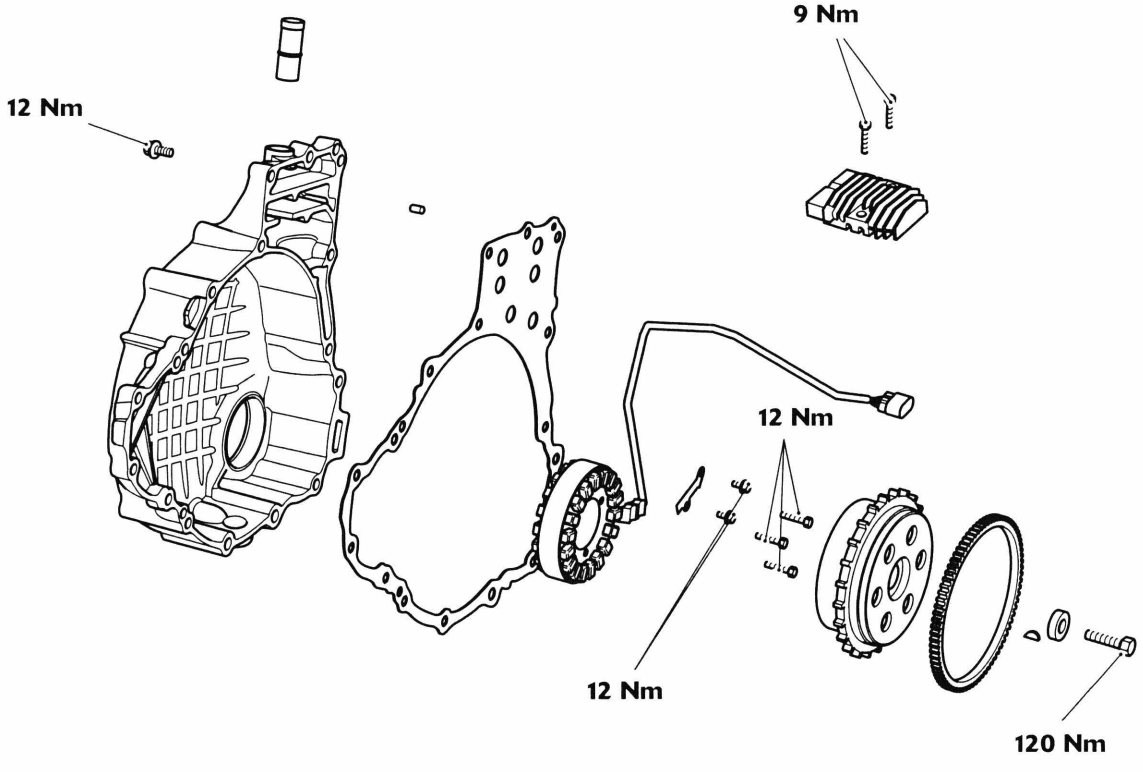

Exploded View - Starter Motor

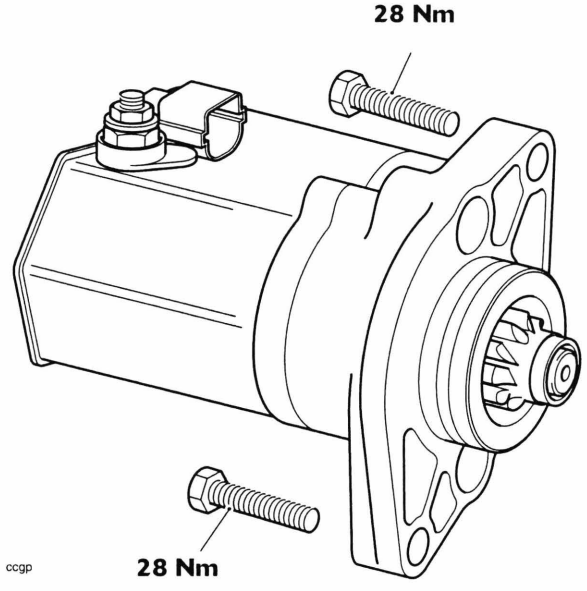

Exploded View - Headlight - Rocket III, Classic and Roadster

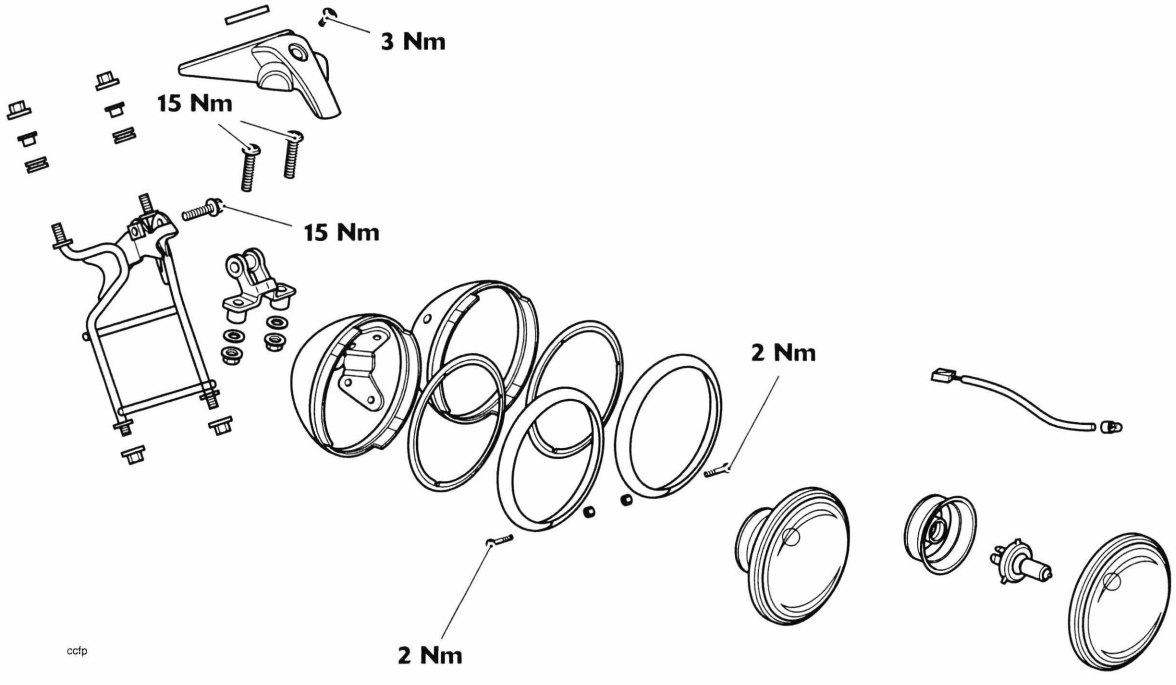

Exploded View - Headlight - Rocket III Touring

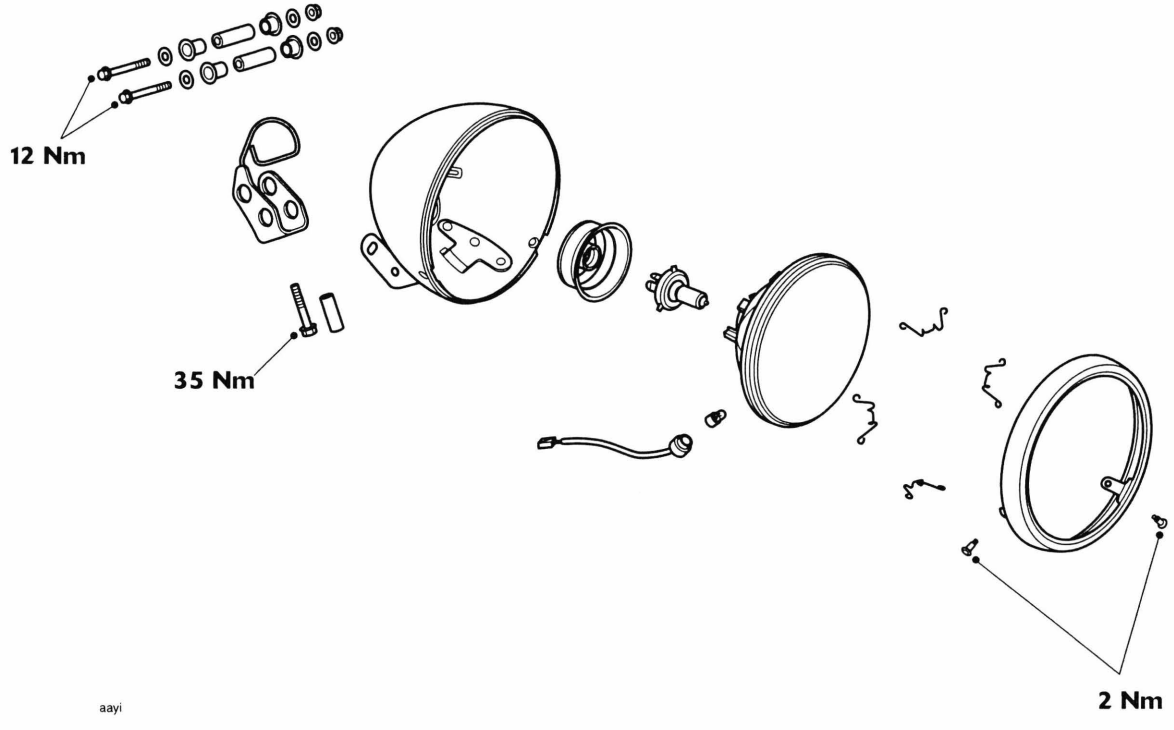

Exploded View - Rear Light and Indicators - Rocket III, Classic and Roadster

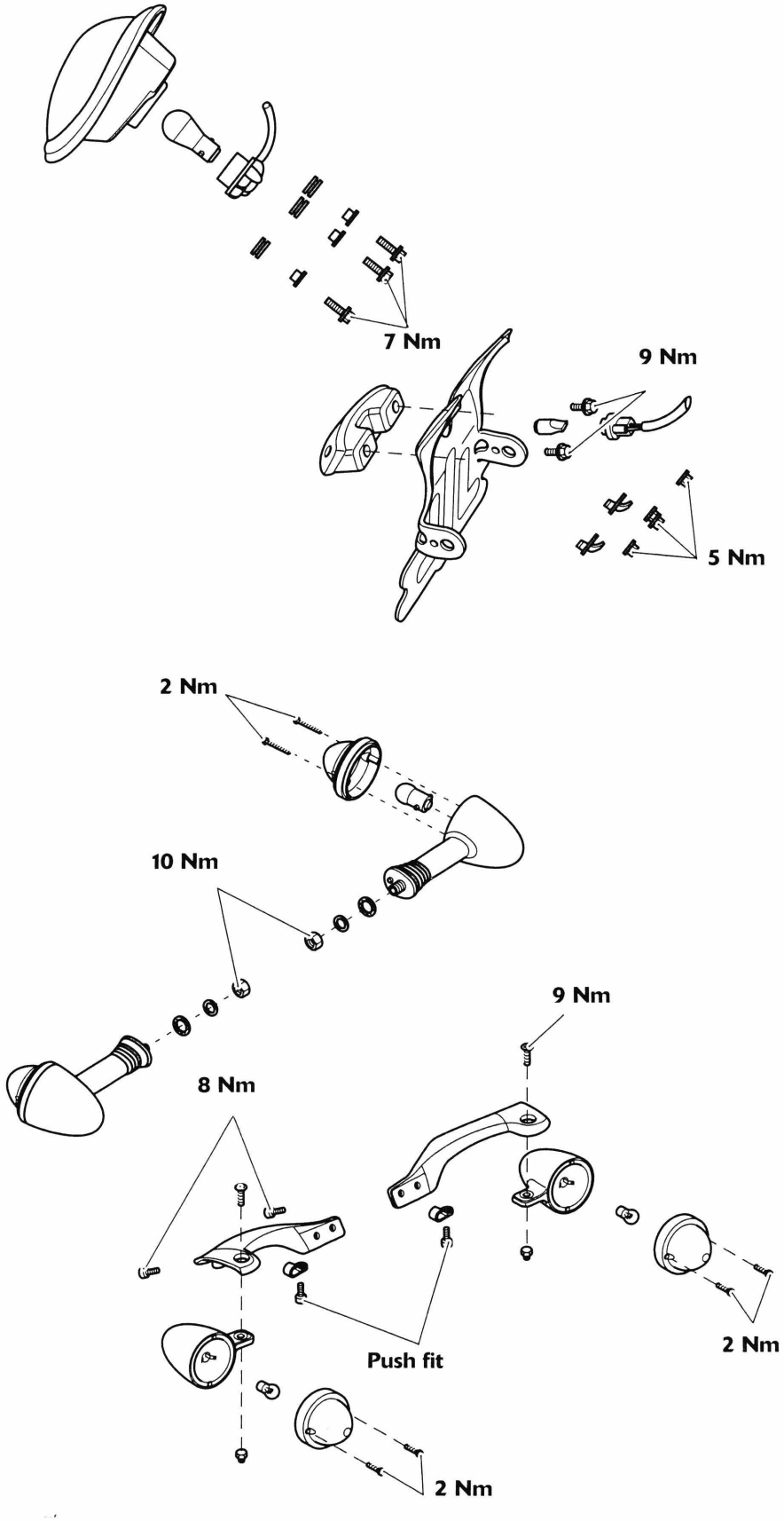

Exploded View - Rear Lights - Rocket III Touring

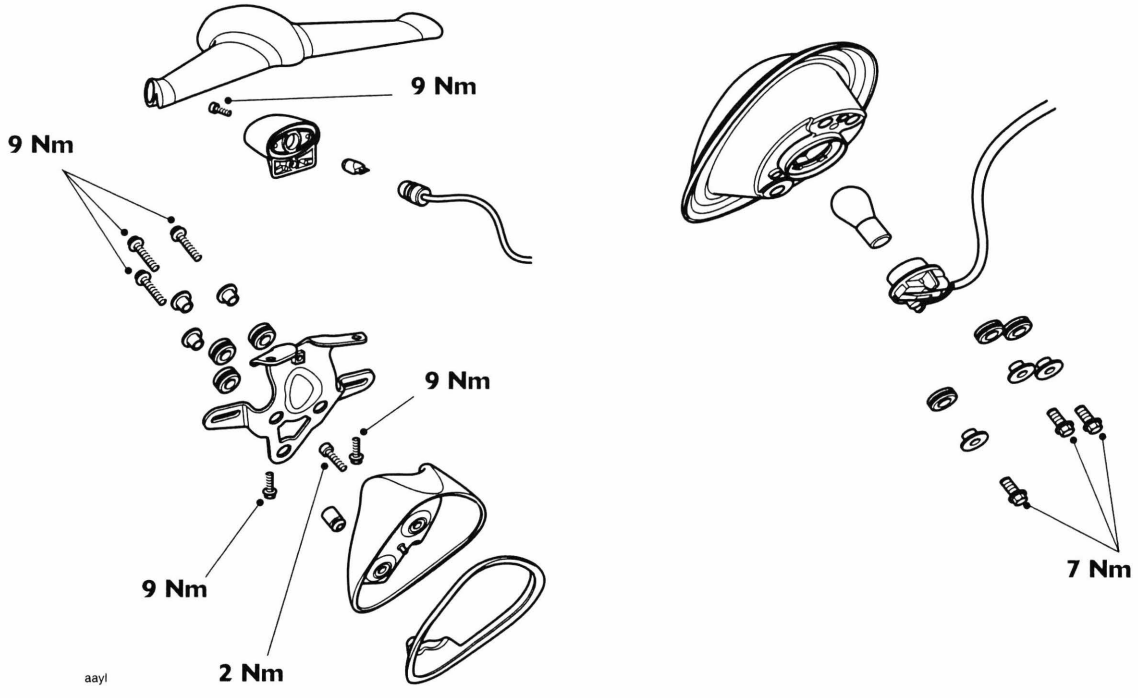

Exploded View - Indicators - Rocket III Touring

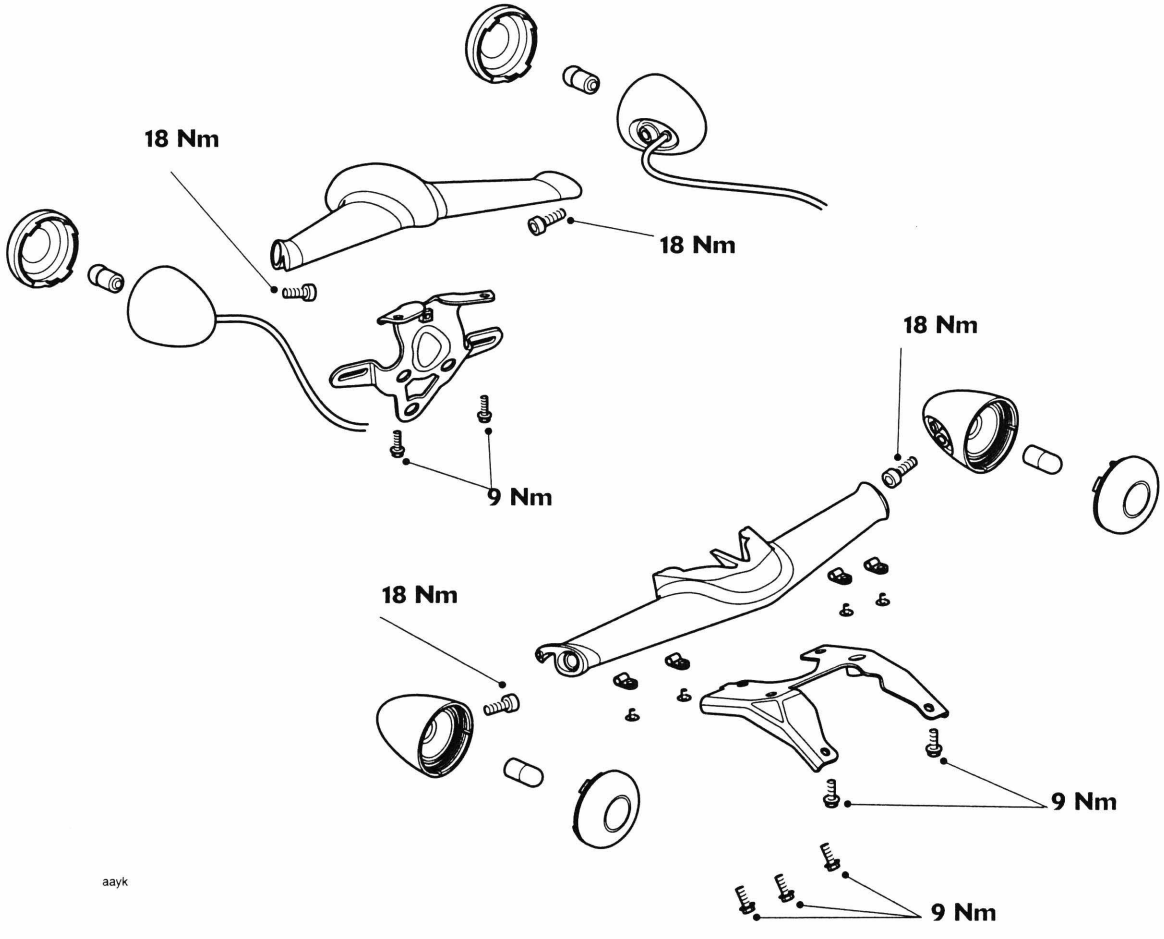

Exploded View - Auxiliary Lights and Front Indicators - Rocket III Touring (If Auxiliary Light is Fitted)

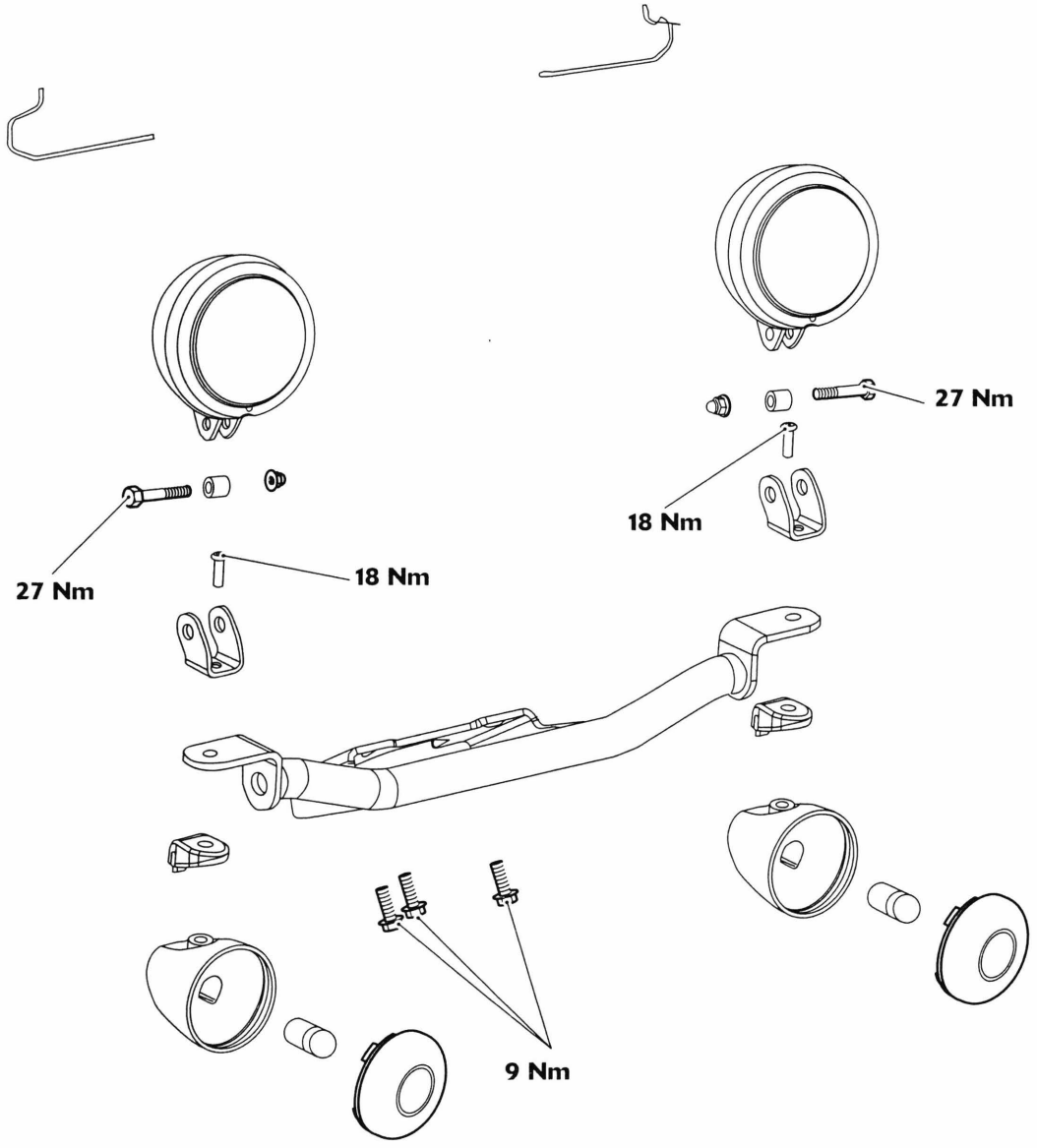

Exploded View - Battery, Horn and Wiring - Rocket III and Classic

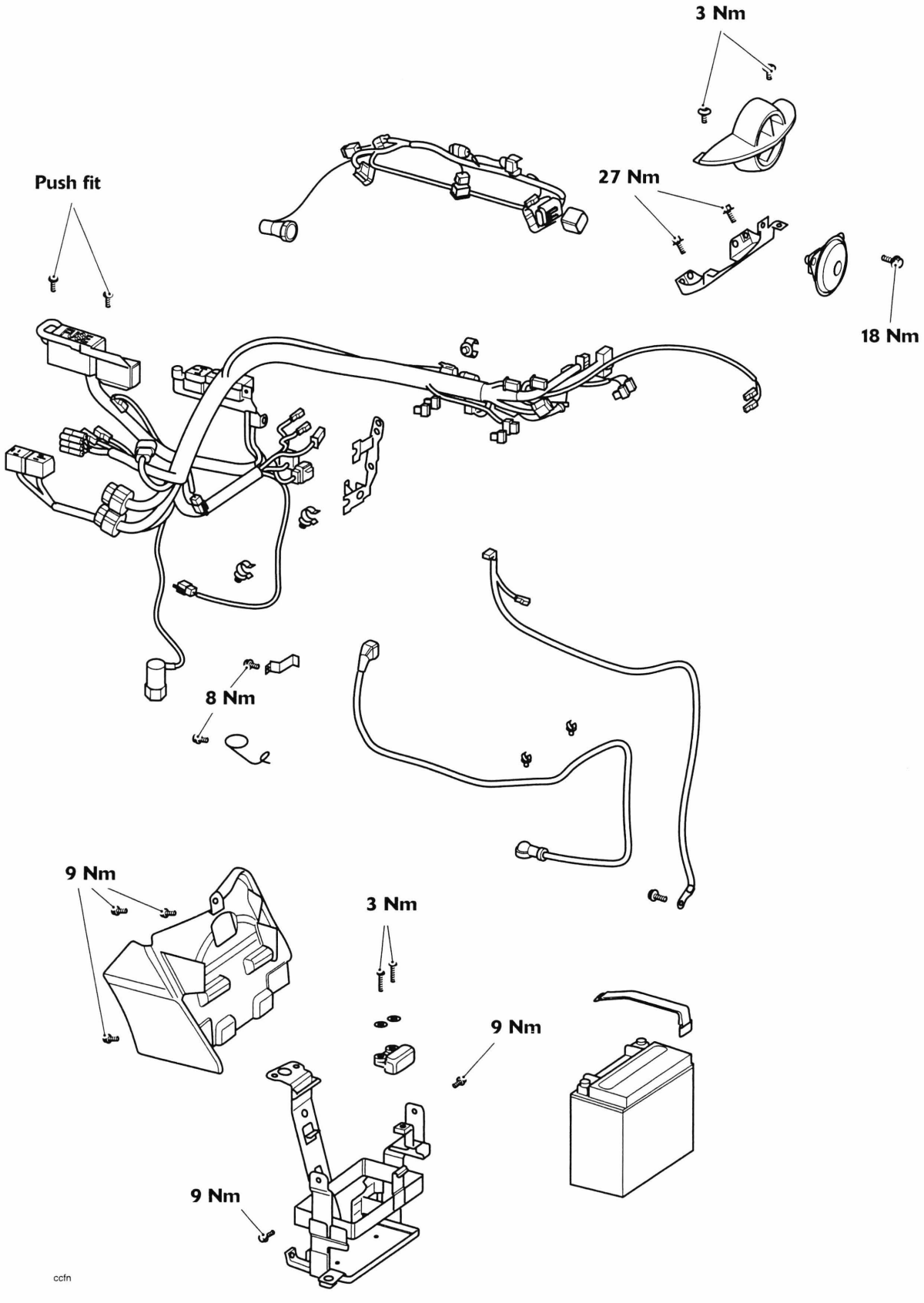

Exploded View - Battery, Horn and Wiring - Rocket III Touring

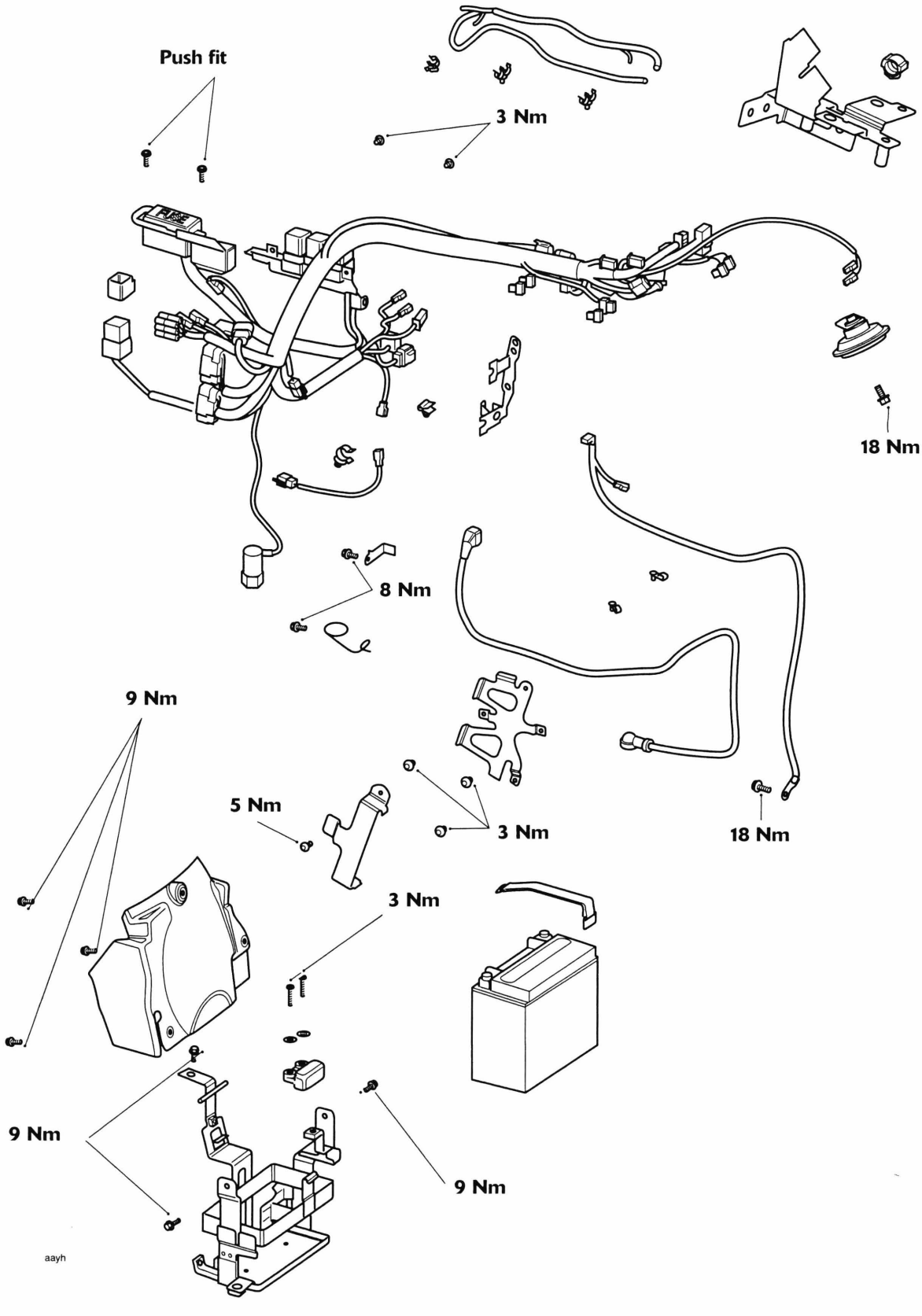

Exploded View - Battery, Horn and Wiring - Rocket III Roadster

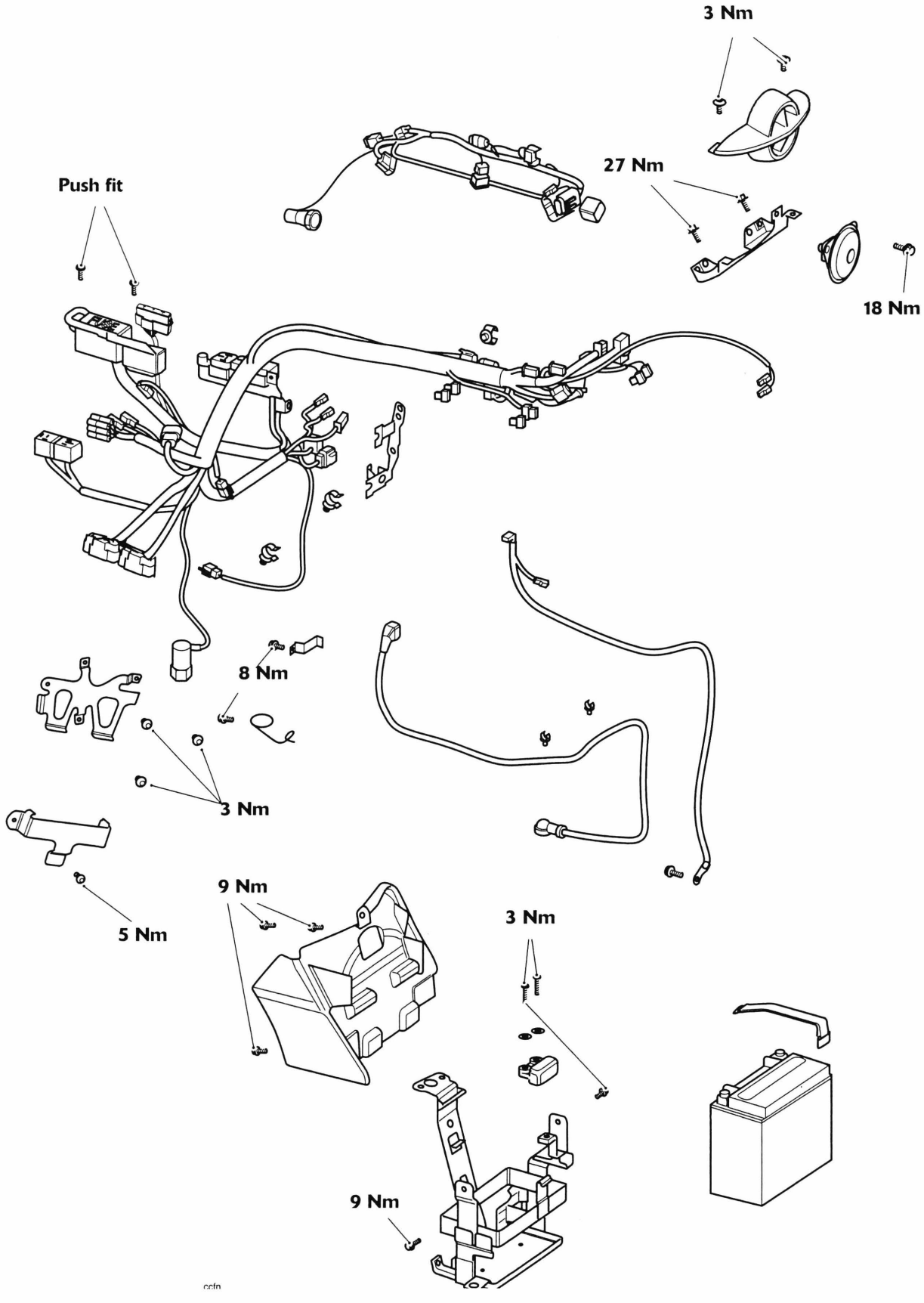

Battery

Warning

Under some circumstances, the battery can give off explosive gases; keep sparks, flames and cigarettes away. Provide adequate ventilation when charging or using the battery in an enclosed space.

The battery contains sulphuric acid (electrolyte). Contact with skin or eyes may cause severe burns. Wear protective clothing and a face shield.

If electrolyte gets on your skin, flush with water immediately.

If electrolyte gets in your eyes, flush with water for at least 15 minutes and SEEK MEDICAL ATTENTION IMMEDIATELY.

If electrolyte is swallowed, drink large quantities of water and SEEK MEDICAL ATTENTION IMMEDIATELY.

KEEP ELECTROLYTE OUT OF THE REACH OF CHILDREN.

Warning

The battery contains harmful materials. Always keep children away from the battery whether or not it is fitted in the motorcycle.

Do not attach jump leads to the battery, touch the battery cables together or reverse the polarity of the cables as any of these actions may cause a spark which would ignite battery gases causing a risk of personal injury.

Battery Disposal

Should the battery ever require replacement, the original battery must be handed to a recycling agent who will ensure that the dangerous substances from which the battery is manufactured do not pollute the environment.

Battery Removal

1. Remove the seat (see page *17-18* for Rocket III, Classic and Roadster, see page *17-19* for Rocket III Touring).
2. **Rocket III, Classic and Roadster only:** Lift up the tool box at its front edge and pivot it towards the rear of the motorcycle.
3. Remove the battery strap.
4. Disconnect the battery leads, negative (black) lead first.

Warning

Ensure that the battery terminals do not touch the motorcycle frame as this may cause a short circuit or spark, which would ignite battery gases causing a risk of personal injury.

5. Take the battery out of the case.

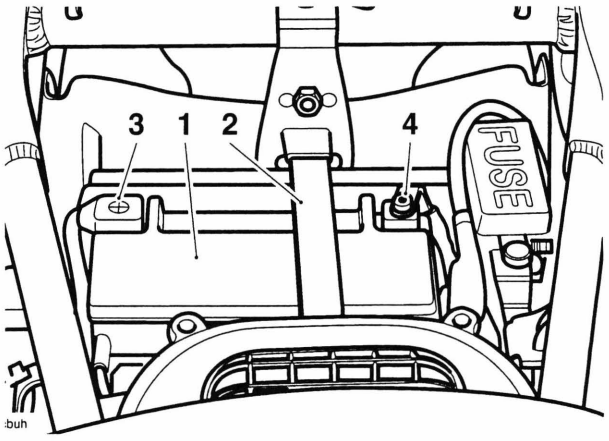

1. **Battery**
2. **Battery strap**
3. **Positive (red) terminal**
4. **Negative terminal**

Battery Installation

Warning

Ensure that the battery terminals do not touch the motorcycle frame as this may cause a short circuit or spark, which would ignite battery gases causing a risk of personal injury.

1. Place the battery in the battery case.
2. Reconnect the battery, positive (red) lead first.
3. Apply a light coat of grease to the terminals to prevent corrosion.
4. Cover the positive terminal with the protective cap.
5. Refit the battery strap.
6. **Rocket III, Classic and Roadster only:** Lower the tool kit tray into place.
7. Refit the rider's seat (see page *17-18* for Rocket III, Classic and Roadster, see page *17-18* for Rocket III Touring).

Battery Commissioning and Charging

New Battery

In order to correctly and safely commission a new battery, the battery commissioning procedure listed below must be carefully followed. This is the only battery commissioning procedure that Triumph recommends. The procedure is designed to ensure that the battery is at its best when fitted to the motorcycle, and will provide the best possible performance and reliability.

Failure to comply with this procedure may lead to reduced battery performance and/or shorten the life of the battery.

⚠ Warning

The battery gives off explosive gases; keep sparks, flames and cigarettes away. Provide adequate ventilation when charging or using the battery in an enclosed space.

The battery contains sulphuric acid (electrolyte). Contact with skin or eyes may cause severe burns. Wear protective clothing and a face shield.

- If electrolyte gets on your skin, flush with water immediately.
- If electrolyte gets in your eyes, flush with water for at least 15 minutes and SEEK MEDICAL ATTENTION IMMEDIATELY.
- If electrolyte is swallowed, drink large quantities of water and SEEK MEDICAL ATTENTION IMMEDIATELY.

KEEP ELECTROLYTE OUT OF THE REACH OF CHILDREN.

1. Ensure the VIN number printed on the anti-tamper label attached to the battery matches the motorcycle VIN.
2. Read the instructions and warnings delivered with the battery.
3. Place the battery on a flat level surface and remove the sealing foil.

⚠ Caution

Ensure the electrolyte container part number matches the battery part number to be filled. Battery life will be greatly reduced if the incorrect volume (either too little or too much) of acid is added to the battery.

4. Remove the battery sealing strip from the electrolyte container (if applicable) and save for later in this procedure. Place the sealing strip on a clean surface, with the upper side facing downwards to avoid contamination of the sealing strip. Do not break the seal on the electrolyte container.
5. Place the electrolyte container and adapter (if applicable) on the battery and fill the battery according to the manufacturers instructions.
6. After starting to fill the battery with electrolyte, allow the battery to stand for 30 minutes with the filling container in place.
7. Check that all of the electrolyte has drained from the container. Do not remove the container at this point. If the container has not completely drained, tap the sides of the container to start the electrolyte flowing again.
8. After the electrolyte has drained into the battery, allow the battery to stand with the electrolyte container in place for a further 30 minutes for batteries 3 Ah - 12 Ah or 1 hour for batteries greater than 12 Ah.
9. Remove the electrolyte container and adapter carefully, and dispose of immediately.
10. Place the sealing cap strip LOOSELY over the filling holes of the battery.
11. Charge the battery using the BatteryMate 150-9. Refer to the instructions supplied with the BatteryMate 150-9.

⚠ Caution

The caps must be fitted (after charging) within two hours of filling the battery with acid. Leaving the battery open to the atmosphere for longer than is necessary will start to reverse the chemical reaction which takes place within the battery, greatly reducing the battery life.

12. After charging is complete, press down firmly with both hands to seat the caps (do not use tools or force the caps into position).
13. Disconnect the charger and allow the battery to stand for 1 hour before fitting to the motorcycle.
14. Fit the battery to the motorcycle, positive (red) lead first.

Battery Maintenance

The battery is a sealed type and does not require any maintenance other than routine recharging such as during storage.

It is not possible to adjust the electrolyte level in the battery.

Note:

- **The charge level in the battery must be maintained to maximise the battery life.**

With normal use of the motorcycle, the charging system will keep the battery charged. If the motorcycle is unused the battery will gradually discharge due to battery self discharge and the continuous current drain for the clock and the engine control module memory.
The rate of battery discharge can be greatly increased by the addition of electrical security systems or other accessories.

If the motorcycle is used for very short journeys, the alternator will not have enough time to replenish the charge used to start and run it. Therefore, the battery should be charged after each return journey following the instructions and advice given here and in the owner handbook under the sections Battery Discharge and Battery Discharge During Storage and Infrequent Use of the Motorcycle.

Allowing a battery to discharge, or leaving it discharged over a period of time, causes sulphation of the lead plates within the battery.
Sulphation is a normal chemical reaction inside the battery and over a period of time sulphate will crystallise on to the lead plates making charging difficult or impossible. The result is a permanently damaged battery, which would not be covered by the motorcycle warranty.

Keeping a battery at full charge reduces the chance of it freezing in cold conditions. Allowing a battery to freeze can cause serious internal damage to the battery.

When leaving the motorcycle standing for more than a few days, regularly check the battery Voltage using a digital multimeter. Should the battery Voltage fall below 12.8 V, charge the battery using the BatteryMate 150-9. Refer to the instructions supplied with the BatteryMate 150-9.
For extended periods of storage (beyond two weeks) the battery should be removed and the battery Voltage checked regularly and charged when below 12.8 V.

Battery Already in Service

Note:

- **Before carrying out the *following procedure* the battery must be disconnected and removed from the motorcycle.**

Use the guidelines in the table below for charging. Always verify the battery condition before charging, and 30 minutes after charging.

Note:

- **A fully charged battery should read 12.8 Volts or higher after the battery has been off the charger for 30 minutes or more.**

Table of Battery Charging Times

State of charge	Voltage	Action	Charge time (using BatteryMate 150-9)
100%	12.8 V - 13.0 V	None. Check at 6 months from date of manufacture	None required
75% - 100%	12.5 V - 12.8 V	May need slight charge. If no charge given, check in 3 - 4 months	3 - 6 hours
50% - 75%	12.0 V - 12.5 V	Needs charge	5 - 11 hours
25% - 50%	11.5 V - 12.0 V	Needs charge	at least 13 hours
0% - 25%	11.5 V or less	Needs recovery using BatteryMate 150-9. Re-test after recovery.	20 hours

Fuses

The fuse box is located beneath the rider's seat.

To allow access to the fuse box, the rider's seat must be removed (see page *17-18* for Rocket III, Classic and Roadster, see page *17-19* for Rocket III Touring).

Warning

Always replace blown fuses with new ones of the correct rating (as specified on the fuse box cover) and never use a fuse of higher rating. Use of an incorrect fuse could lead to an electrical problem, resulting in motorcycle damage, loss of motorcycle control and an accident.

Fuse Box - Rocket III and Classic

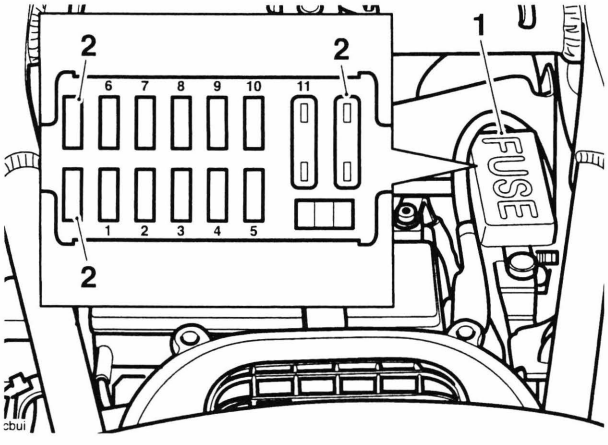

1. **Fuse box**
2. **Spare fuses**

Note:

- **Numbers shown in the diagram correspond to the fuse position numbers in the following tables.**

Fuse Identification - Rocket III and Classic

A blown fuse is indicated when all of the systems protected by that fuse become inoperative. When checking for a blown fuse, use the table below to establish which fuse has blown.

Circuit Protected	Rating (Amps)	Position
Accessory lights	15	1
Ignition switch main feed	30	2
Accessory socket, instrument memory, heated grips, clock	10	3
Alarm, diagnostic connector, indicators, brake lights	15	4
Instruments, fuel pump relay, starter relay, main power relay, fall detection switch	10	5
Engine management system	20	6
Cooling fan	15	7
Instrument illumination, position lights	5	8
Upper and lower headlight beams, starter solenoid	20	9
Position lights	5	10
Main fuse	30	11

Fuse Box - Rocket III Roadster with a fuse at position 9

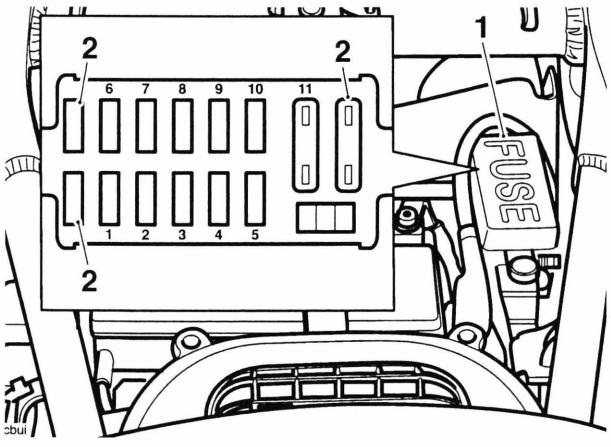

1. **Fuse box**
2. **Spare fuses**

Note:

- **Numbers shown in the diagram correspond to the fuse position numbers in the following tables.**

Fuse Identification - Rocket III Roadster with a fuse at position 9

A blown fuse is indicated when all of the systems protected by that fuse become inoperative. When checking for a blown fuse, use the table below to establish which fuse has blown.

Circuit Protected	Rating (Amps)	Position
Accessory lights	15	1
Ignition switch main feed	30	2
Accessory socket, instrument memory, heated grips, clock	10	3
Alarm, diagnostic connector, indicators, brake lights, horn	15	4
Instruments, fuel pump relay, starter relay, engine management system relay, fall detection switch	10	5
Engine management system	20	6
Cooling fan	15	7
Instrument illumination, position lights	5	8
Upper and lower headlight beams, starter solenoid	20	9
Position lights	5	10
Main fuse	30	11

Fuse Box - Rocket III Roadster without a fuse at position 9

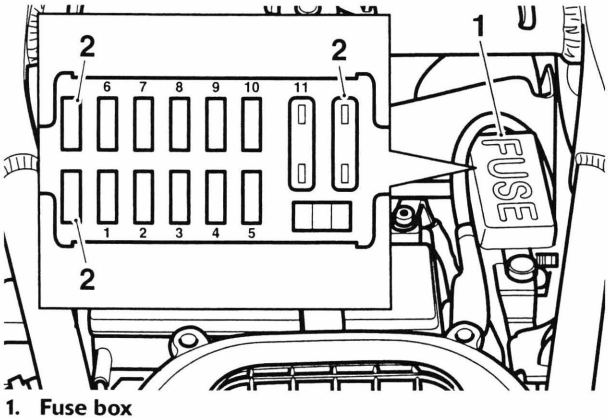

1. **Fuse box**
2. **Spare fuses**

Note:

- **Fuse position 9 is not used.**
- **Numbers shown in the diagram correspond to the fuse position numbers in the following table.**

Fuse Identification - Rocket III Roadster without a fuse at position 9

A blown fuse is indicated when all of the systems protected by that fuse become inoperative. When checking for a blown fuse, use the table below to establish which fuse has blown.

Circuit Protected	Rating (Amps)	Position
Accessory lights	15	1
Ignition switch main feed	15	2
Accessory socket, instrument memory, heated grips, clock	10	3
Alarm, diagnostic connector, indicators, brake lights, horn	15	4
Dip and main beam, Starter solenoid	20	5
Engine management system	20	6
Cooling fan	15	7
Instrument illumination, position lights	5	8
Not Used	-	9
Position lights	5	10
Main fuse	30	11

Fuse Identification - Rocket III Roadster - ABS

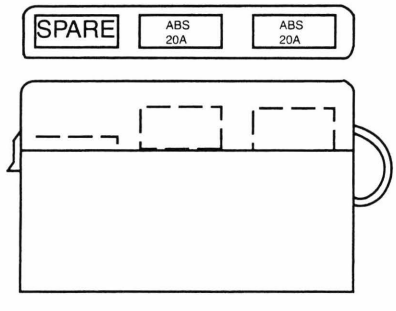

Circuit Protected	Rating (Amps)	Position
ABS	20	1
ABS	20	2
EMPTY	-	3

Fuse Box - Rocket III Touring

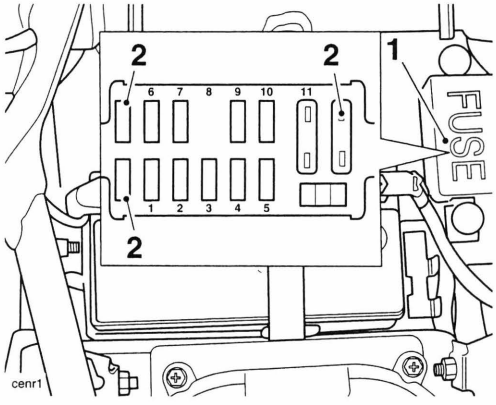

1. **Fuse box**
2. **Spare fuses**

Note:

- **Fuse position 8 is not used.**
- **Numbers shown in the diagram correspond to the fuse position numbers in the following table.**

Fuse Identification - Rocket III Touring

A blown fuse is indicated when all of the systems protected by that fuse become inoperative. When checking for a blown fuse, use the table below to establish which fuse has blown.

Circuit Protected	Rating (Amps)	Position
Accessory lights	15	1
Ignition switch main feed	30	2
Accessory socket, instrument memory, heated grips, Global position system (GPS)	10	3
Alarm, diagnostic connector, indicators, brake lights, horn	15	4
Instruments, fuel pump relay, starter relay, main power relay, fall detection switch	10	5
Engine management system	20	6
Cooling fan	15	7
Not Used	-	8
Upper and lower headlight beams, starter solenoid	20	9
Position lights	5	10
Main fuse	30	11

Headlights

Warning

Adjust road speed to suit the visibility and weather conditions in which the motorcycle is being operated.

Ensure that the beams are adjusted to illuminate the road surface sufficiently far ahead without dazzling oncoming traffic. An incorrectly adjusted headlight may impair visibility causing an accident.

Warning

Never attempt to adjust a Headlight beam when the motorcycle is in motion.

Any attempt to adjust a Headlight beam when the motorcycle is in motion may result in loss of control and an accident.

Note:

- **The vertical beams of the left and right hand headlights can only be adjusted together. Independent adjustment is not possible.**

Headlight Vertical Adjustment - Rocket III, Classic and Roadster

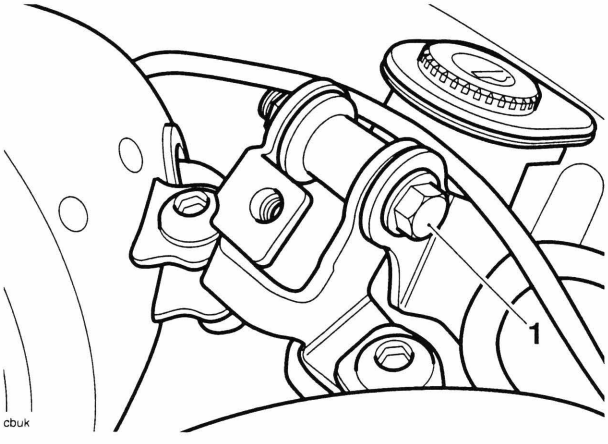

1. Vertical beam adjuster

1. Turn the ignition switch to the ON position.
2. Remove the ignition switch cover.
3. Slacken the clamp bolt sufficient to allow restricted movement of the headlights.
4. Adjust the position of the headlights to give the required beam setting.
5. Tighten the clamp bolt to **15 Nm**.
6. Re-check the headlight beam settings.
7. Refit the ignition switch cover.
8. Turn the ignition off when both beam settings are satisfactorily set.

Headlight Horizontal Adjustment - Rocket III, Classic and Roadster

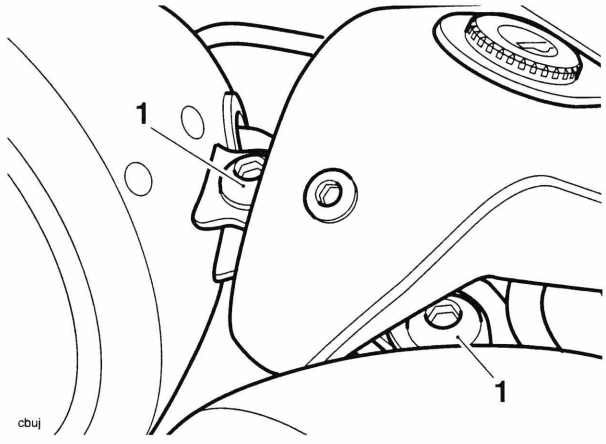

1. Horizontal beam adjuster

1. The horizontal beams of both headlights can be adjusted individually. The same procedure is used to adjust either headlight.
2. Turn the ignition switch to the ON position.
3. Slacken the headlight bowl fixing.
4. Adjust the horizontal position of the headlight to give the required beam setting.
5. Tighten the fixing to **20 Nm**.
6. Repeat for the second headlight.
7. Re-check the headlight beam settings.
8. Switch the ignition off when both beams are satisfactorily set.

Headlight Vertical Adjustment - Rocket III Touring

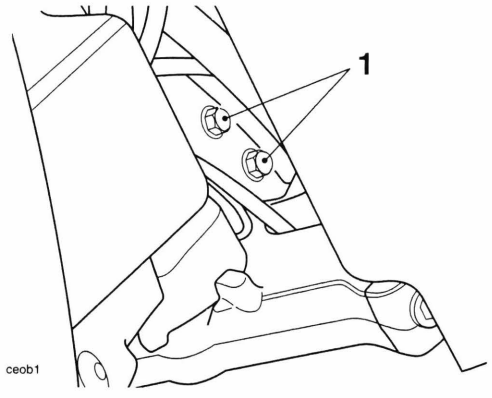

1. Vertical beam adjuster

1. Turn on the ignition to switch on the headlight dipped beam.
2. Slacken the vertical beam adjuster bolts sufficiently to allow restricted movement of the headlight.
3. Adjust the position of the headlight to give the required beam setting.
4. Tighten the adjuster bolts to **12 Nm**.
5. Re-check the headlight beam setting.
6. Turn the ignition off when the beam setting is satisfactorily set.

Headlight Horizontal Adjustment - Rocket III Touring

1. Turn on the ignition to switch on the headlight dipped beam.
2. Slacken the horn bracket fixing and move the horn to access the headlight bracket fixing.

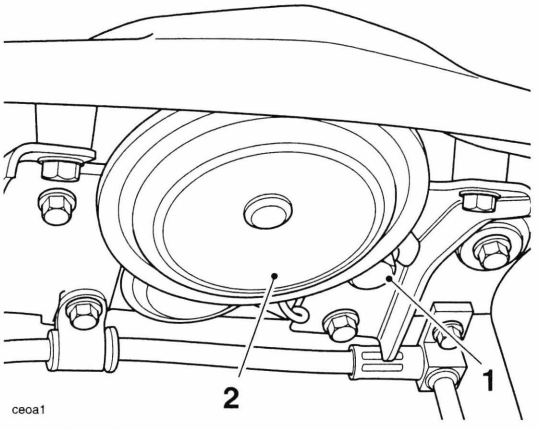

1. Horn bracket fixing
2. Horn

3. Slacken the headlight bracket fixing sufficiently to allow restricted movement of the headlight.

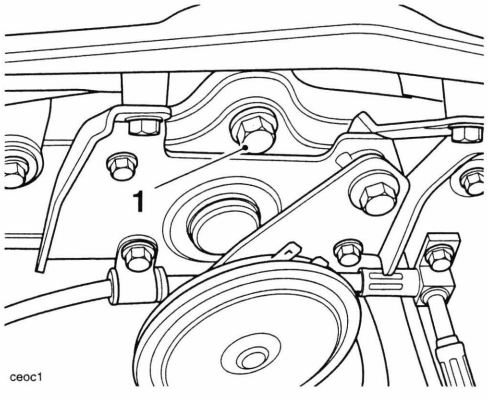

1. Headlight bracket fixing

4. Adjust the horizontal position of the headlight to give the required beam setting.
5. Tighten the headlight bracket fixing to **35 Nm**.
6. Re-check the headlight beam settings.
7. Move the horn to its original position and tighten the horn bracket fixing to **18 Nm**.
8. Turn the ignition off when the beam setting is satisfactorily set.

Headlight Bulb Replacement

It is necessary to remove the headlight from the headlight bowl to gain access to the bulbs.

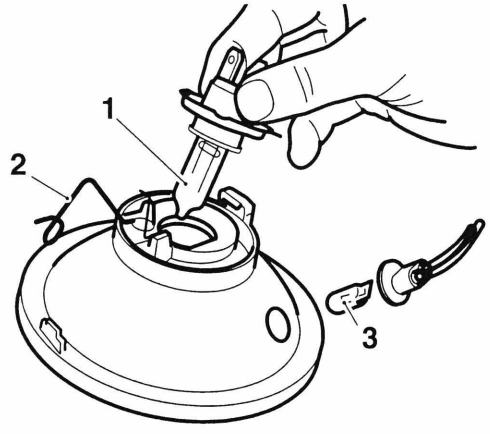

cbul

1. **Headlight bulb**
2. **Wire retainer**
3. **Position light bulb**

Warning

The bulbs become hot during use. Always allow sufficient time for the bulbs to cool before handling. Avoid touching the glass part of the bulb. If the glass is touched or gets dirty, clean with alcohol before re-use.

1. Remove the seat (see page *17-18* for Rocket III and Classic, see page *17-19* for Rocket III Touring).
2. Disconnect the battery, negative (black) lead first.
3. Undo the fixing securing the headlight clamp to the headlight body.
4. Support the headlight while removing the clamp.
5. Remove the headlight from its bowl while supporting it to prevent the cables from being over extended.
6. Disconnect the multi-pin electrical connector from the headlight bulb and remove the rubber cover.
7. Detach the wire retainer from its clip (do not remove the screw) then remove the bulb from the light unit.
8. To remove the position light bulb: Without pulling on the wires, ease the bulb holder from its socket. The bulb is removed from its holder by pulling gently outwards.
9. **For Rocket III, Classic and Roadster only:** Installation for both bulbs is the reverse of the removal procedure. Tighten the headlight clamp to **2 Nm**.
10. **For Rocket III Touring only:** Installation for both bulbs is the reverse of the removal procedure. Tighten the headlight rim fixings to **2 Nm**.

Caution

When reconnecting the battery, connect the positive (red) lead first.

Warning

Do not reconnect the battery until the assembly process has been completed. Premature battery reconnection could result in ignition of the battery gases causing risk of injury.

Auxiliary Lights - Rocket III Touring (if Fitted)

Bulb Replacement

It is necessary to remove the auxiliary light from its bowl to gain access to the bulb.

⚠ Warning

The bulbs become hot during use. Always allow sufficient time for the bulbs to cool before handling. Avoid touching the glass part of the bulb. If the glass is touched or gets dirty, clean with alcohol before re-use.

1. Remove the seat (see page *17-19*).
2. Disconnect the battery, negative (black) lead first.
3. Remove the fixing securing the auxiliary light to its bowl.

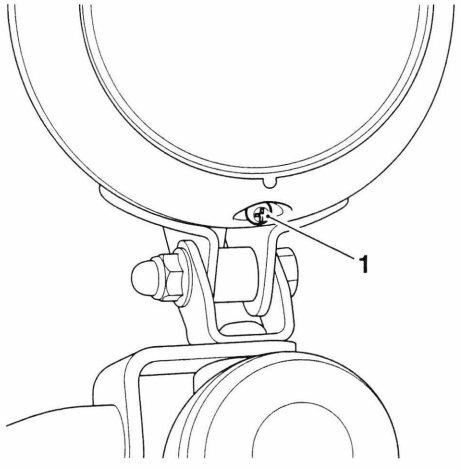

1. Auxiliary light fixing

4. Remove the auxiliary light from its bowl while supporting it to prevent the cables from being over-extended.
5. Disconnect the electrical connector from the bulb.
6. Remove the fixing and remove the bulb.

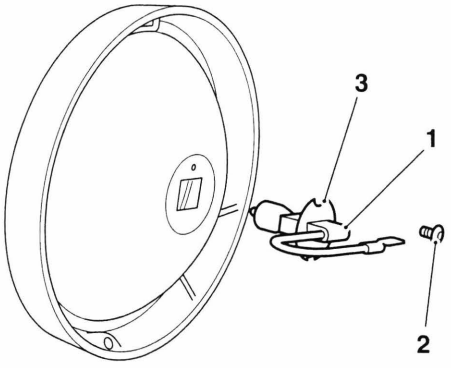

1. Electrical connector
2. Fixing
3. Bulb

7. Installation is the reverse of removal.

⚠ Caution

Use a genuine Triumph supplied bulb as specified in the Triumph Parts Catalogue.

always have replacement bulbs installed by an authorised Triumph dealer.

Rear Light

Bulb Replacement

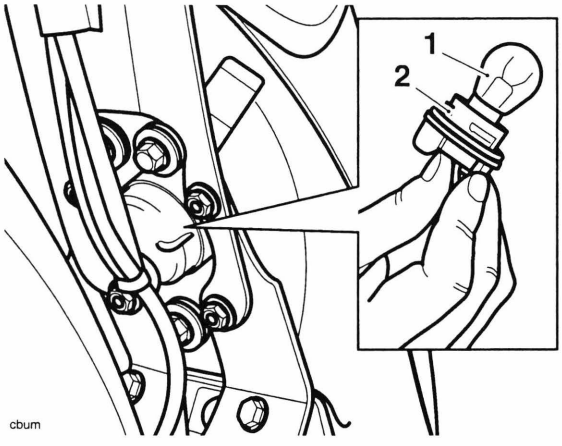

Rocket III, Classic and Roadster

1. **Rear light bulb**
2. **Bulb holder**

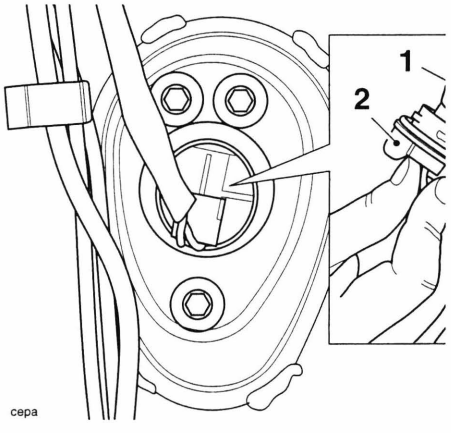

Rocket III Touring

1. **Rear light bulb**
2. **Bulb holder**

Warning

The bulb becomes hot during use. Always allow sufficient time for the bulb to cool before handling. Avoid touching the glass part of the bulb. If the glass is touched or gets dirty, clean with alcohol before re-use.

1. Remove the seat (see page *17-18* for Rocket III, Classic and Roadster, see page *17-19* for Rocket III Touring).
2. Disconnect the battery, negative (black) lead first.
3. The rear light bulb holder is accessed underneath the rear mudguard.
4. Rotate the bulb holder anti clockwise to release.
5. To remove the bulb from the holder, gently pull on the bulb until it is released.
6. Installation for the bulb is the reverse of the removal procedure.

Caution

When reconnecting the battery, connect the positive (red) lead first.

Indicator Lights

Bulb Replacement - Rocket III, Classic and Roadster

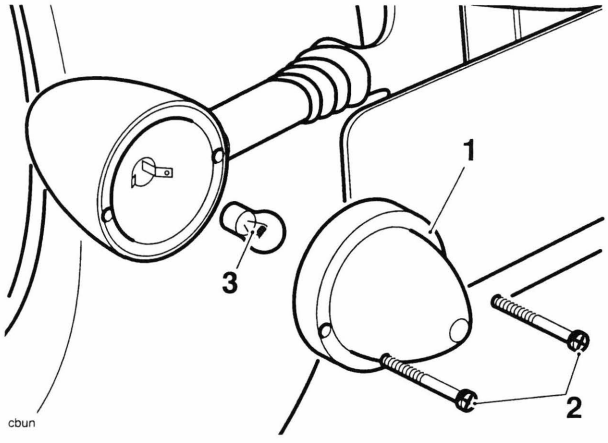

1. **Lens**
2. **Lens screw**
3. **Bulb**

Note:

- **The lens on each indicator light is held in place by two screws.**

1. Release the screws and remove the lens to gain access to the bulb for replacement.

Warning

The bulb becomes hot during use. Always allow sufficient time for the bulb to cool before handling. Avoid touching the glass part of the bulb. If the glass is touched or gets dirty, clean with alcohol before re-use.

Bulb Replacement - Rocket III Touring

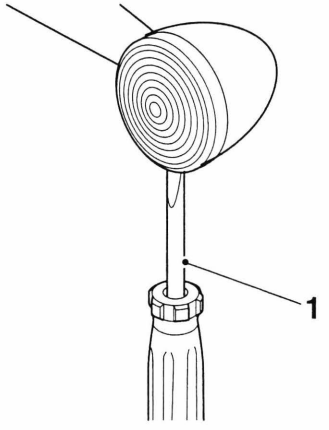

1. **Screwdriver**

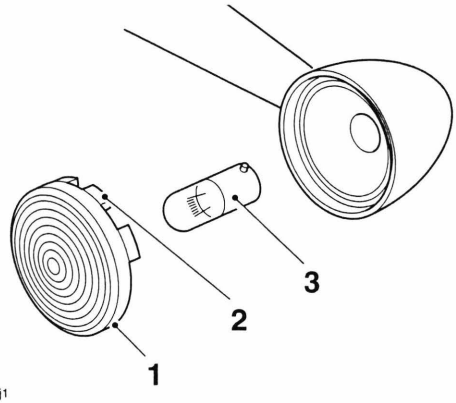

1. **Lens**
2. **Locating tang**
3. **Bulb**

1. Use a flat bladed screwdriver to carefully remove the lens from the indicator to gain access to the bulb for replacement.

Warning

The bulb becomes hot during use. Always allow sufficient time for the bulb to cool before handling. Avoid touching the glass part of the bulb. If the glass is touched or gets dirty, clean with alcohol before re-use.

Caution

When installing the lens, ensure that the locating tang is correctly aligned to the indicator body.

2. To install the indicator lens, align the locating tang with the indicator body and push the lens until the retaining clips secure the lens.

Instruments

Rocket III, Classic and Roadster

Removal

1. Remove the seat (see page *17-18* for Rocket III, Classic and Roadster).
2. Disconnect the battery, negative (black) lead first.
3. Remove the instrument pack, (see page *11-121*).
4. Remove the chrome cover from the instrument bracket.
5. Release the fixings and remove the rear covers from the speedometer and the tachometer.
6. Disconnect the harness connectors and remove the instrument pack and bracket assembly.

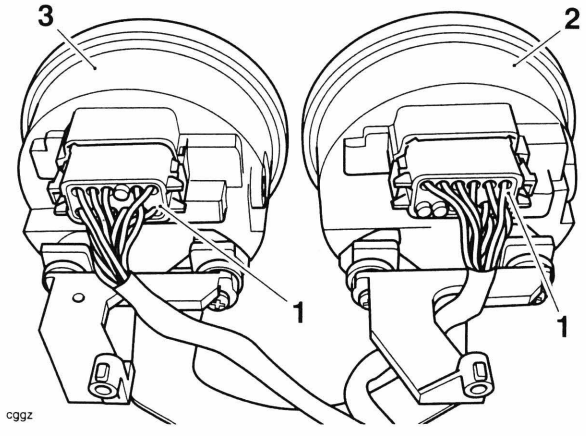

1. **Connectors**
2. **Speedometer**
3. **Tachometer**

Installation

1. Release the fixings and remove the covers from the new speedometer and tachometer.

Note:

- **The harness connectors will only fit one way, do not force them to fit.**

2. Connect the grey connector to the speedometer.
3. Connect the light brown connector to the tachometer.
4. Fit the rear covers and tighten the screws to **1 Nm**.
5. Fit the grommets and flanged sleeves to the bracket as shown below.

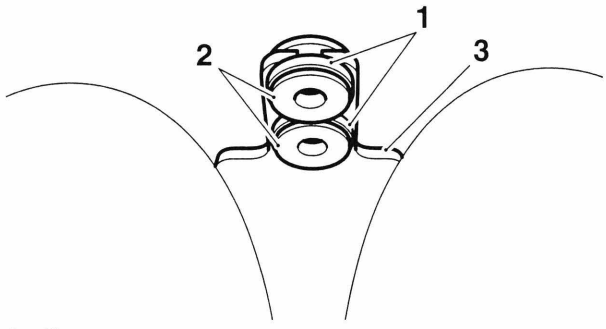

1. **Grommets**
2. **Flanged sleeves**
3. **Bracket**

6. Refit the instrument pack, see page *11-123*).
7. Reconnect the battery, red (positive) lead first.
8. Check for correct operation of all warning lights, instruments illumination, lights, indicators, tachometer and speedometer.
9. Fit the seat (see page *17-18*).

Rocket III Touring

Removal

1. Remove the seat (see page *17-19*).
2. Disconnect the battery, negative (black) lead first.
3. Remove the instrument pack, (see page *11-125*).
4. Remove and discard the fixings securing the instrument assembly to the instrument nacelle panel.

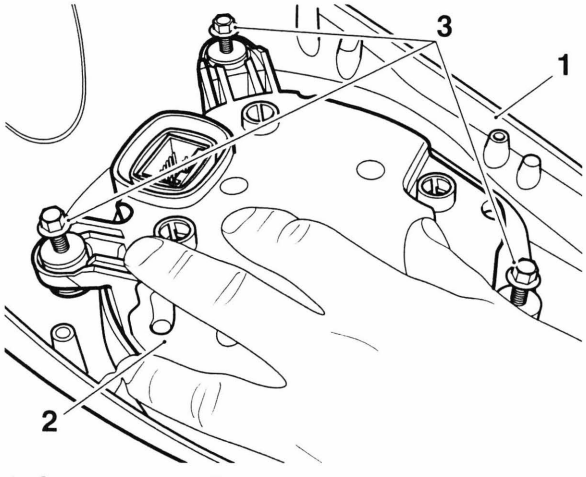

1. **Instrument nacelle**
2. **Instrument assembly**
3. **Fixings**

5. Remove the instrument assembly gasket, rubber grommets and flanged sleeves from the instrument assembly.

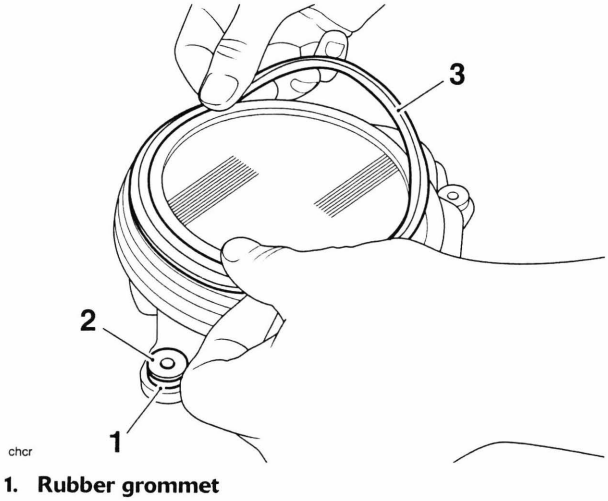

1. **Rubber grommet**
2. **Flanged sleeve**
3. **Rubber gasket**

⚠ Caution

Damage to the chrome surface could result from inadequate care during this process.

Installation

6. Align and fit the instrument assembly gasket, rubber grommets and flanged sleeves to the instrument assembly.
7. Whilst holding the nachelle in one hand, align the instrument assembly centrally to the nachelle, then turn the nachelle face downwards and place on a suitable cushioned support.
8. Align the fixings and tighten to **5 Nm**.

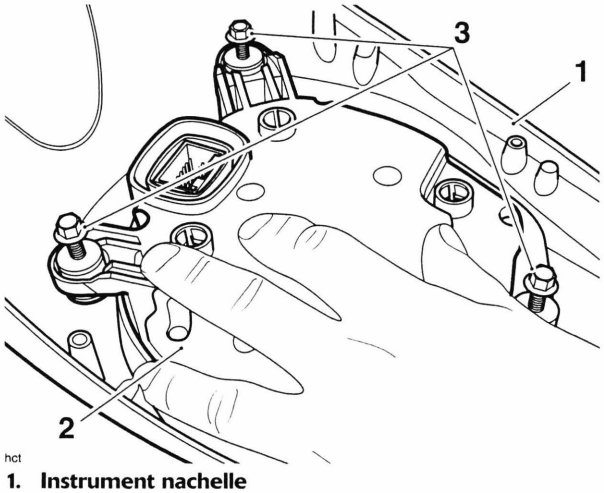

1. **Instrument nachelle**
2. **Instrument assembly**
3. **Fixings**

9. Refit the instrument pack, see page *11-126*).
10. Reconnect the battery, red (positive) lead first.
11. Check for correct operation of all warning lights, instruments illumination, lights, indicators, tachometer and speedometer.
12. Fit the seat (see page *17-19*).

Fuel Gauge

Calibration-Rocket III Touring

1. Fill the fuel tank to the filler neck aperture.

Note:

- **The fuel level software will then recalculate the fuel gauge and the range to empty information when the following parameters are met:**

2. Ride the motorcycle making sure the following riding conditions are met:
   - Steady throttle position (+/- 2.5 degrees);
   - Steady engine speed (+/- 350 rpm);
   - Steady fuel level sender voltage (+/- 3 litres);
   - Constant steady vehicle speed;
   - In gear;
   - Throttle above 2.5 degrees.

Note:

- **Depending on the riding style, this could take up to 5 minutes, occasionally longer if riding in urban conditions.**

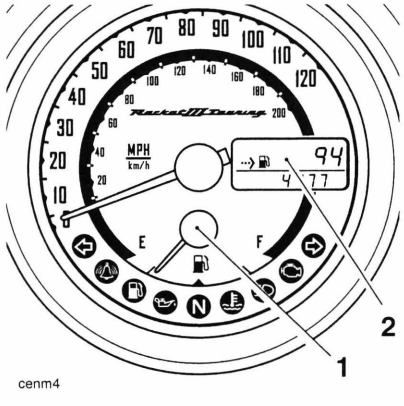

1. **Fuel gauge**
2. **Odometer/Trip meter display/Clock/Range to empty**

Alternator

Removal

1. Remove the seat (see page *17-18* for Rocket III and Classic, see page *17-19* for Rocket III Touring).
2. Disconnect the battery, negative (black) lead first.
3. Remove the engine (see page *10-2*).
4. Release the bolts securing the starter motor to the alternator cover.

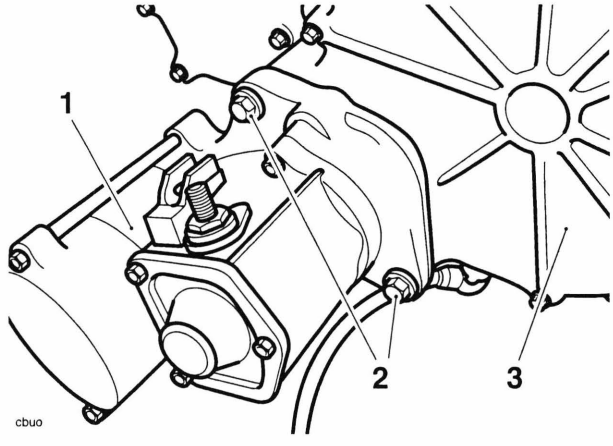

1. **Starter motor**
2. **Starter motor fixings**
3. **Alternator cover**

5. Release the bolts securing the alternator cover to the rear of the engine.
6. Withdraw the alternator cover from the crankcase.

Note:

- **To use tool T3880201, insert the tool pegs into a pair of rotor holes. However, tool T3880201 will not engage with every pair of holes in the rotor. The holes are offset and so the tool will only engage with certain pairs of holes.**

7. To remove the rotor, prevent the crankshaft from rotating using tool T3880201, and remove the centre bolt and washer from the end of the crankshaft.

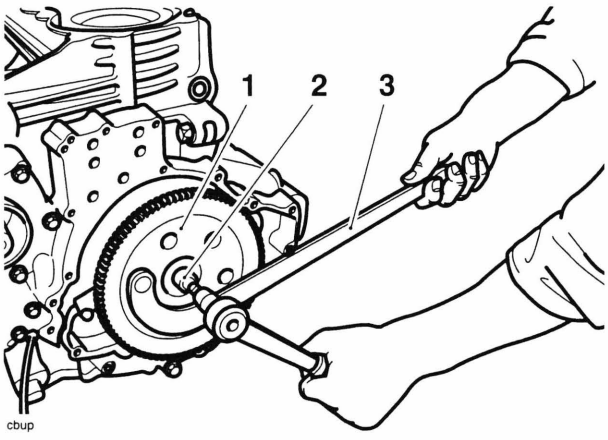

1. **Rotor**
2. **Rotor bolt**
3. **Tool T3880201**

8. Screw tool T3880200 into the rotor centre.
9. Prevent the rotor from turning using tool T3880201 while tightening tool T3880200. This will release the taper seating of the rotor to the crankshaft.

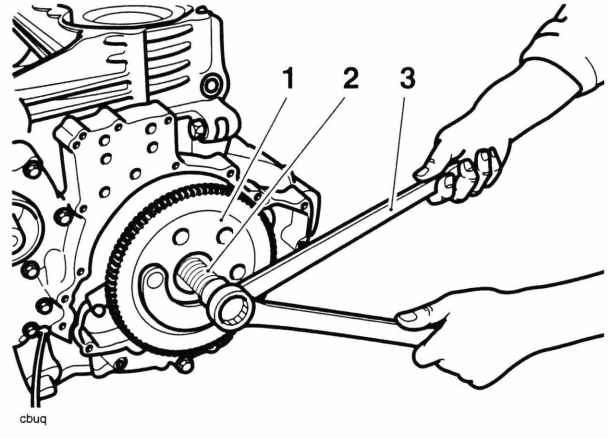

1. **Rotor**
2. **Tool T3880200**
3. **Tool T3880201**

10. Withdraw the rotor and tool as an assembly and then separate the tool from the rotor.

Note:

- **If removing the stator, make a note of the cable routing before removing the cable retainer.**

11. To remove the stator, release the two bolts securing the cable retainer to the crankcase.

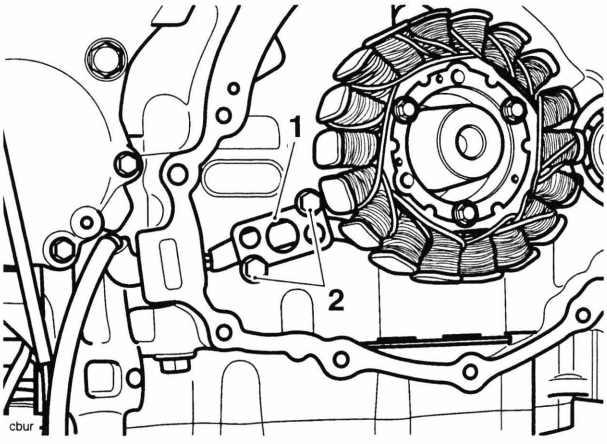

1. **Cable retainer**
2. **Bolts**

12. Release the three bolts securing the stator to the crankcase.

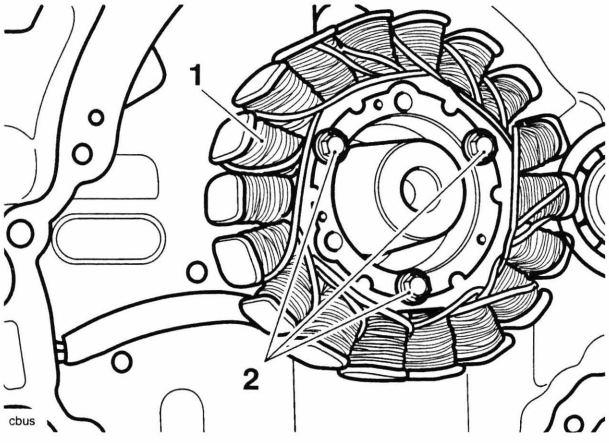

1. **Stator**
2. **Stator bolts**

13. Withdraw the stator from the crankcase.

Inspection

1. Inspect the key in the crankshaft for damage and distortion. Replace the key if necessary.
2. Inspect the rotor for damage and high spots to the taper centre. Replace the rotor if necessary.
3. Inspect the stator for signs of overheating and short/open circuits. Replace as necessary.

Assembly

1. Locate the stator to the crankcase.
2. Apply silicone sealer to the cable grommet and align the cable to the crankcase exit slot.
3. Fit the cable retainer bracket, routing the cables as noted on strip down. Tighten the retainer bolts to **12 Nm**.

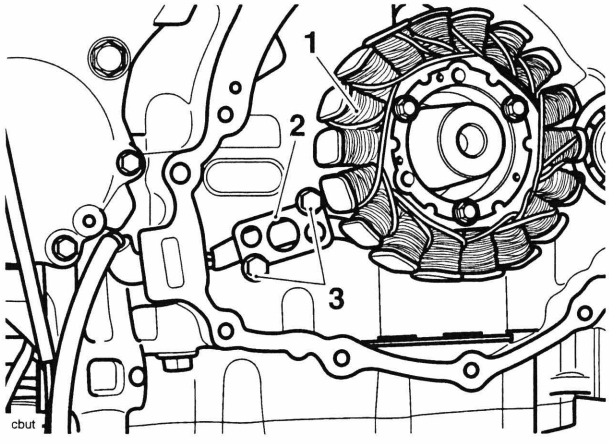

1. **Stator**
2. **Cable retainer bracket**
3. **Fixings**

4. Tighten the stator bolts to **12 Nm**.
5. Assemble the rotor to the keyway on the crankshaft.
6. Fit the bolt and washer to the threaded hole in the crankshaft.
7. Refit tool T3880201 to prevent the crankshaft from rotating.
8. Tighten the rotor bolt to **120 Nm**.

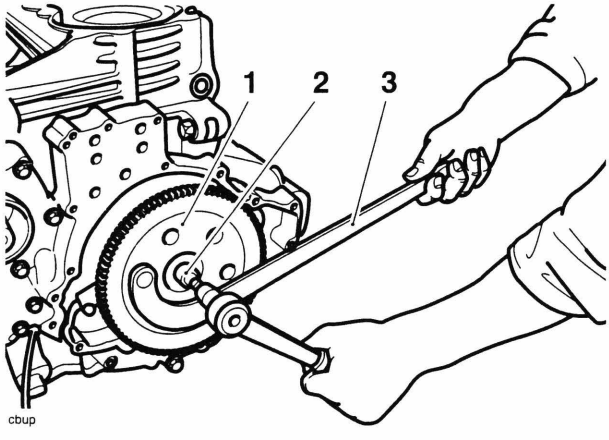

1. **Rotor**
2. **Rotor bolt**
3. **Tool T3880201**

9. Remove tool T3880201.
10. Incorporating a new gasket, refit the alternator cover to the rear of the engine.
11. Fit the bolts and tighten as described below;
    - tighten the bolts in the sequence shown below to **12 Nm**;
    - tighten the bolts one and two again to **12 Nm**.

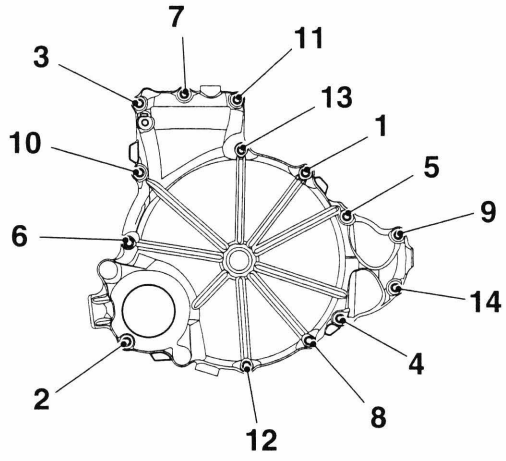

Tightening Sequence

12. Incorporating a new O-ring seal, fit the starter motor and tighten the starter fixings to **28 Nm**.
13. Refit the engine (see page *10-5*).
14. Reconnect the battery positive (red) lead first.
15. Refit the seat (see page *17-18* for Rocket III, Classic and Roadster, see page *17-19* for Rocket III Touring).

Alternator Rectifier

Note:

- **The alternator rectifier is attached to the battery box. The rectifier does not contain any serviceable parts and must be replaced if faulty.**

Removal

1. Remove the seat (see page *17-18* for Rocket III and Classic, see page *17-19* for Rocket III Touring).
2. Disconnect the battery, negative (black) lead first.
3. Remove the left hand side cover (see page *17-20*).
4. Disconnect both multi-plugs from the alternator rectifier.

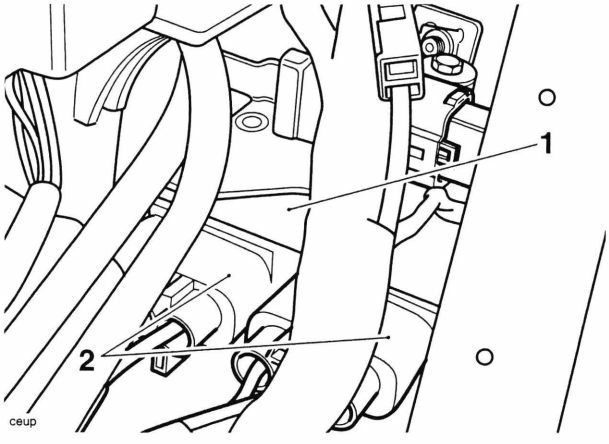

1. Rectifier
2. Multi-plugs

5. Release the two screws securing the alternator rectifier to the battery box and withdraw the alternator rectifier.

Installation

1. Position the rectifier to the battery box and secure with the two screws. Tighten the screws to **9 Nm**.
2. Reconnect the two multi-plugs to the alternator rectifier.
3. Refit the left hand side cover (see page *17-21*).
4. Reconnect the battery positive (red) lead first.
5. Refit the seat (see page *17-18* for Rocket III and classic, see page *17-19* for Rocket III Touring).

Starter Motor

Removal

1. Remove the seat (see page *17-18* for Rocket III, Classic and Roadster, see page *17-19* for Rocket III Touring).
2. Disconnect the battery, negative (black) lead first.
3. **For Rocket III, Classic only:** Remove the exhaust silencers and catalyst box (see page *11-179*).
4. **For Rocket III Roadster and Touring only:** Remove the exhaust silencers and exhaust link box (see page *11-182*).
5. Disconnect the solenoid connection from the main wiring harness.
6. Ease the rubber boot from the starter cable, release the nut and disconnect the cable.

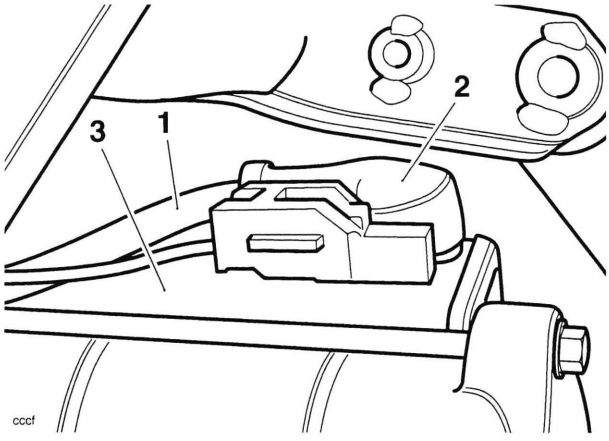

1. Cable
2. Boot
3. Starter motor

7. Release the two bolts securing the starter motor to the alternator cover.

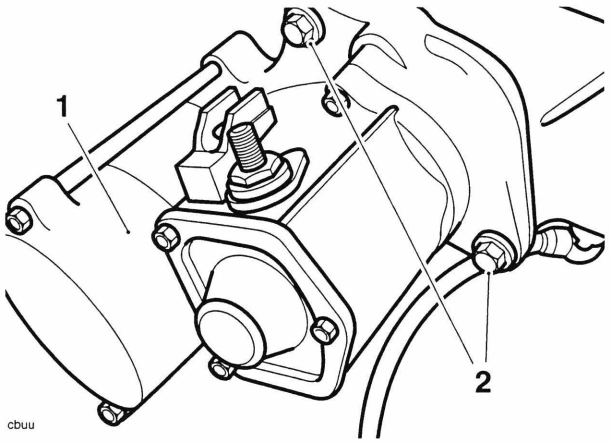

1. **Starter motor**
2. **Bolts**

8. Withdraw and remove the motor.

Installation

1. Fit a new O-ring to the starter motor.

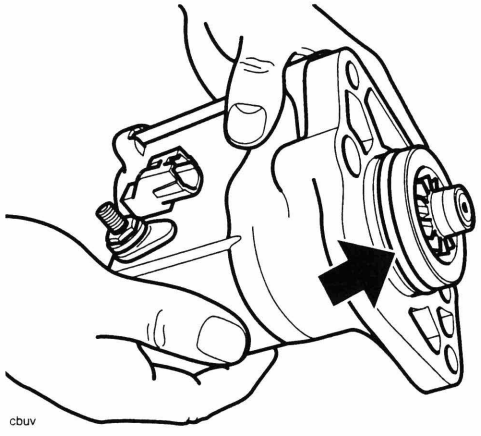

Arrowed - O-ring

2. Position the starter to the alternator cover and retain with the two bolts. Tighten the bolts to **28 Nm**.
3. Locate the starter cable to its connection pole. Fit the nut and tighten it to **7 Nm**.
4. Refit the boot.
5. Reconnect the solenoid to the main harness.
6. **For Rocket III, Classic only:** Refit the catalyst box and silencers (see page *11-179*).
7. **For Rocket III Roadster and Touring only:** Refit the exhaust link box and silencers (see page *11-185*).
8. Reconnect the battery, positive (red) lead first.
9. Refit the seat (see page *17-18* for Rocket III, Classic and Roadster, see page *17-19* for Rocket III Touring).

Relays

Identification and location

Note:

- **Relays can be found in two locations on the motorcycle, beneath the left and right hand side covers.**

Relay identification – left hand side

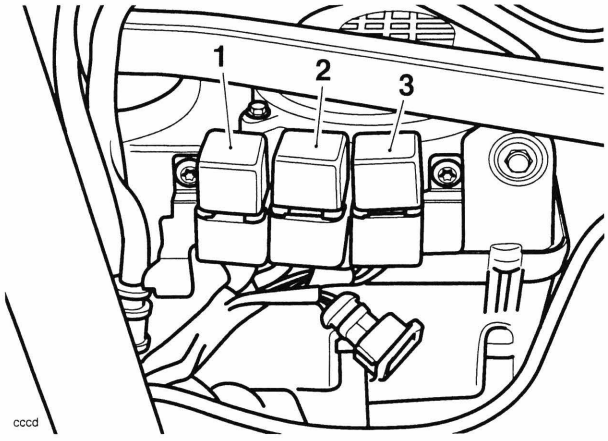

1. **Fuel pump relay**
2. **EMS relay**
3. **Cooling fan relay**

Relay identification – right hand side - Rocket III, Classic and Roadster

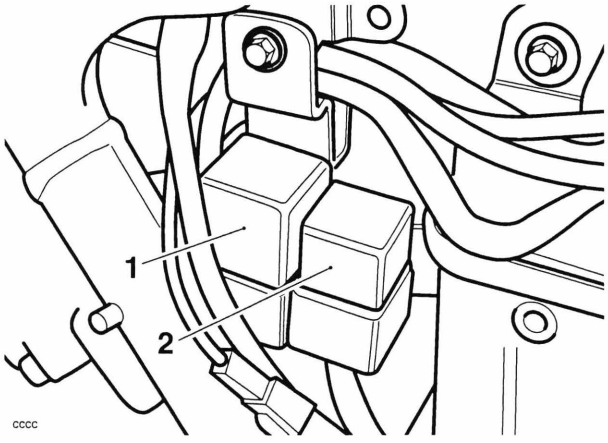

1. **Starter Relay**
2. **Flasher Unit**

Relay identification – right hand side - Rocket III Touring

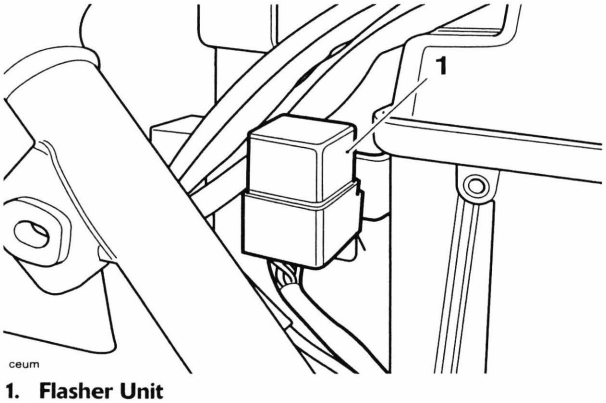

1. **Flasher Unit**

Headlamp Relay and Fly lead - Rocket III Roadster from VIN 322159 to VIN 482858 and from VIN 500141 to VIN 503166

Note:

- **Motorcycles that are not in the VIN range above will have the fly lead incorporated into the main harness.**

1. Remove the riders seat, see page *17-18*.
2. Remove the side panels, see page *17-20*.
3. Remove the battery, see page *18-19*.
4. If an evaporative canister is fitted, cut the cable ties securing it to the airbox.
5. Make a note of the hose locations before disconnecting them from the evaporative canister.

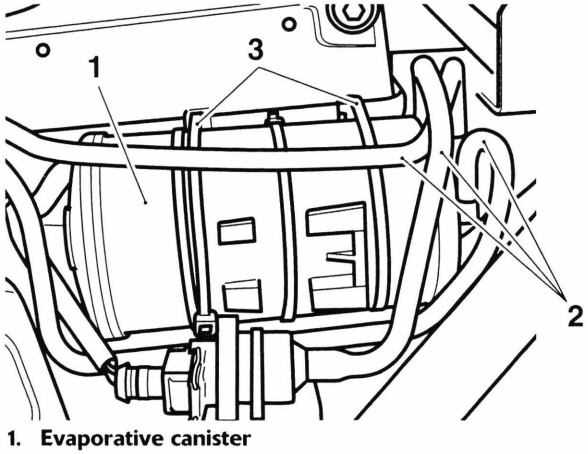

1. **Evaporative canister**
2. **Hoses**
3. **Cable ties**

6. Remove the canister.
7. Noting their position, disconnect the black and grey electrical connectors from the alternator rectifier.

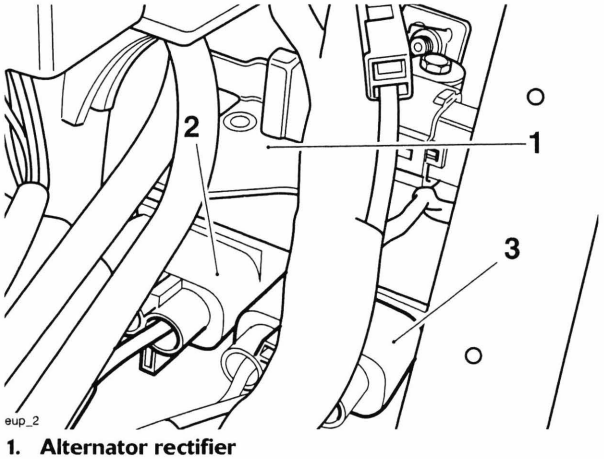

1. **Alternator rectifier**
2. **Black electrical connector**
3. **Grey electrical connector**

8. Retrieve the relay and fly lead assembly from the kit and feed the relay (on its connector) from the right hand side of the motorcycle through to left hand side. Ensure the fly lead is positioned between the airbox and battery tray and is above the swinging arm.

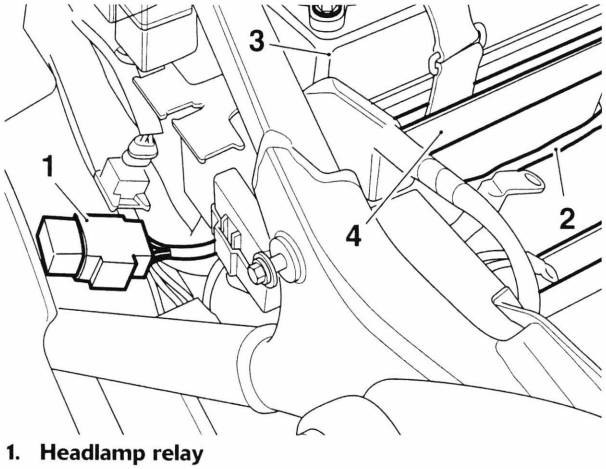

1. **Headlamp relay**
2. **Fly lead**
3. **Airbox**
4. **Battery tray**

9. **Motorcycles without ABS only:** Remove the fixing securing the left hand side of the battery tray to the frame.

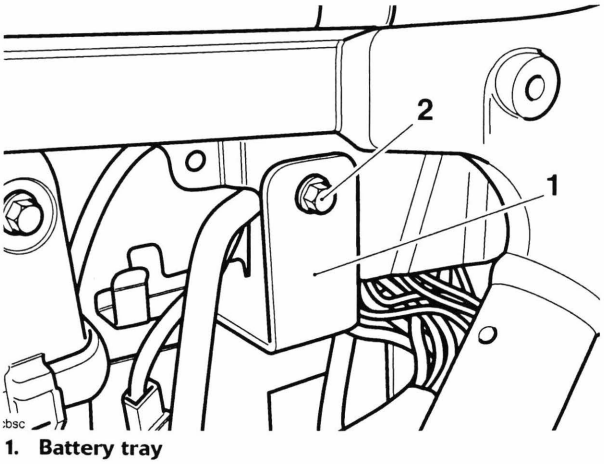

1. **Battery tray**
2. **Fixing**

Note:

- **Motorcycles without ABS, omit steps 10 and 11.**

Motorcycles with ABS only

10. Detach the ABS fuse box from its mounting bracket.

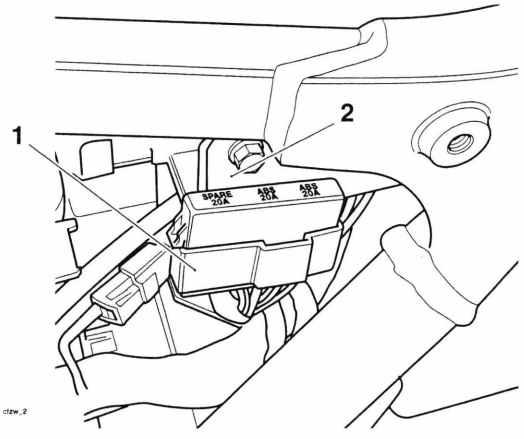

1. **ABS fuse box**
2. **Bracket**

11. Remove the bracket for the ABS fuse box, retain bracket and fixing for re-use.

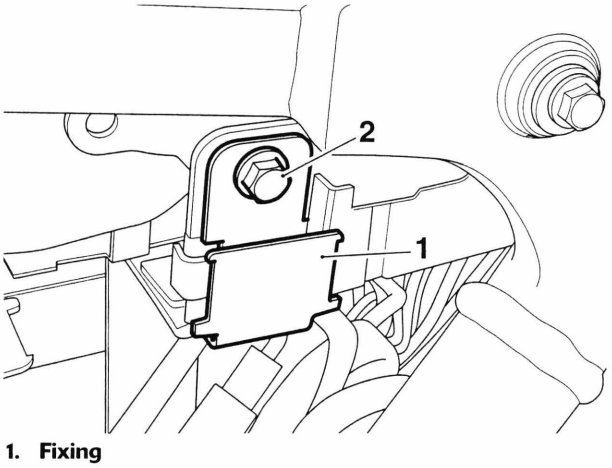

1. **Fixing**
2. **Bracket**

All Models

12. Retrieve the relay bracket from the kit.
13. Position the relay bracket to the battery tray and, if fitted, position the bracket for the ABS fuse box on top of the relay bracket, as shown below. Secure to the frame and tighten the fixing to **9 Nm**.

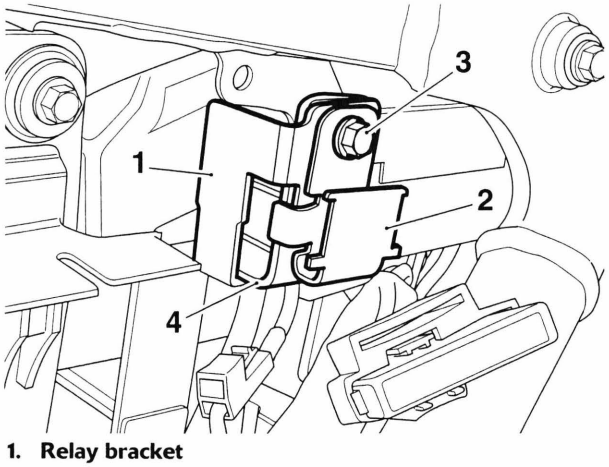

1. **Relay bracket**
2. **ABS fuse box bracket**
3. **Fixing**
4. **Battery tray**

14. Locate the battery negative lead connector and disconnect it from the harness.
15. Connect the fly lead to the main harness and the battery negative lead, as shown below.

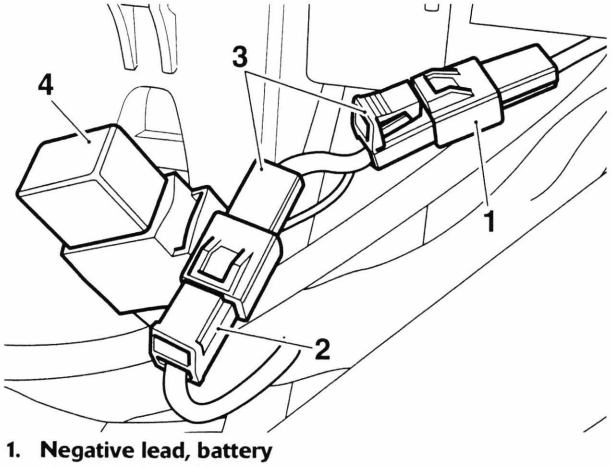

1. **Negative lead, battery**
2. **Negative lead, harness**
3. **Fly lead connectors**
4. **Relay**

16. Fit the new relay to its bracket. Ensure that the relay is fully engaged to its mounting.

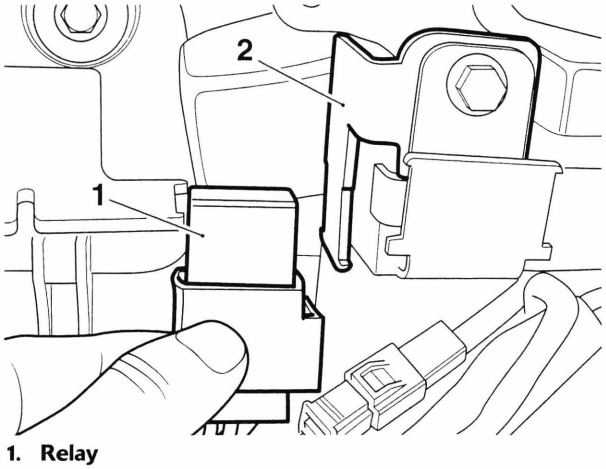

1. **Relay**
2. **Bracket**

17. **For models with ABS only:** Refit the ABS fuse box to its bracket.
18. Reconnect the black and grey connectors to the alternator rectifier, as noted for removal.
19. Working on the right hand side of the motorcycle, detach the two relays from their brackets.

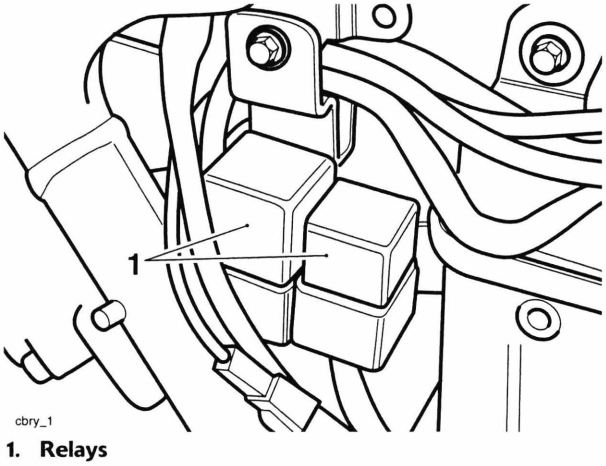

1. **Relays**

20. Retrieve the fuse bracket from the kit.
21. Remove the fixing securing the right hand side of the battery tray to the frame.

22. Position the fuse bracket to the battery tray and secure both to the frame, as shown below. Tighten the fixing to **9 Nm**.

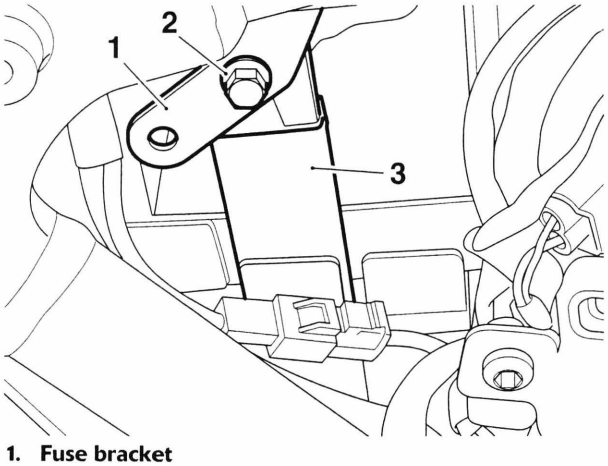

1. **Fuse bracket**
2. **Fixing**
3. **Battery tray**

23. Locate the battery positive lead connector and disconnect it from the harness.
24. Connect the brown wires of the fly lead to the main harness and the battery positive lead, as shown below.

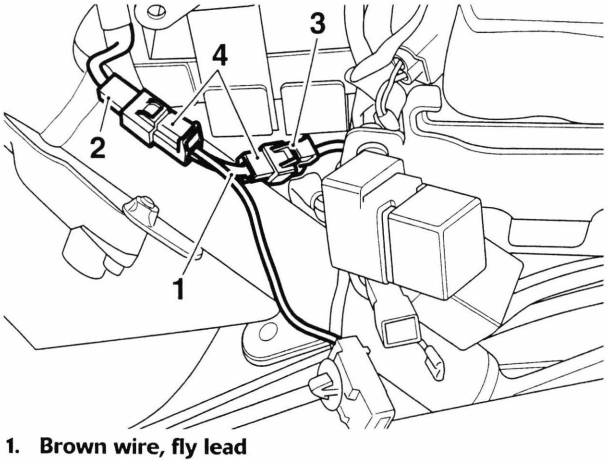

1. **Brown wire, fly lead**
2. **Positive lead, battery**
3. **Positive lead harness**
4. **Fly lead connectors**

25. Remove the starter relay.

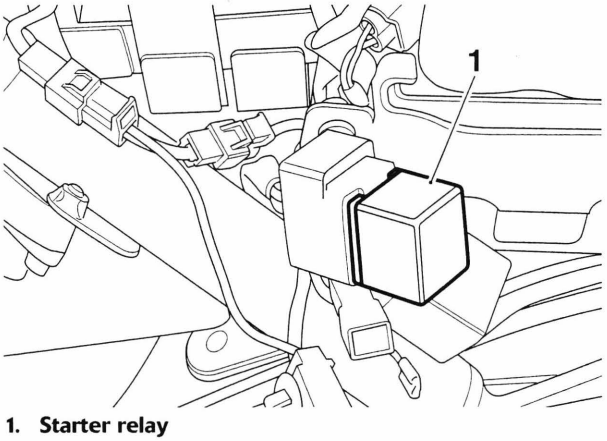

1. **Starter relay**

Note:

- **Note the position of the blue wire and the orientation of the locking device for installation.**

26. Using a small flat bladed screwdriver, release the locking device for the blue wire connector and carefully pull the blue wire rearwards to remove it from the relay mounting.

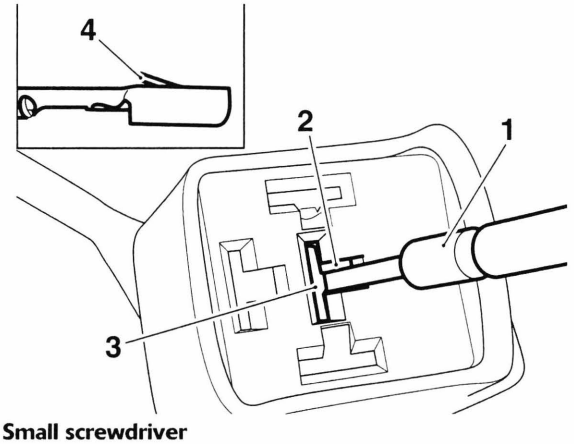

1. **Small screwdriver**
2. **Access to locking device**
3. **Blue wire connector**
4. **Locking device on connector**

27. When the connector is removed check that the locking device is as shown below.

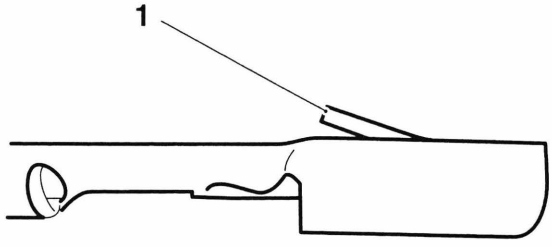

1. Locking device

28. Locate the connector housing from the kit and fit it to the blue wire connector. An audible click can be heard when the locking device is fully engaged. Gently pull the wire to ensure the connector is locked in the housing.

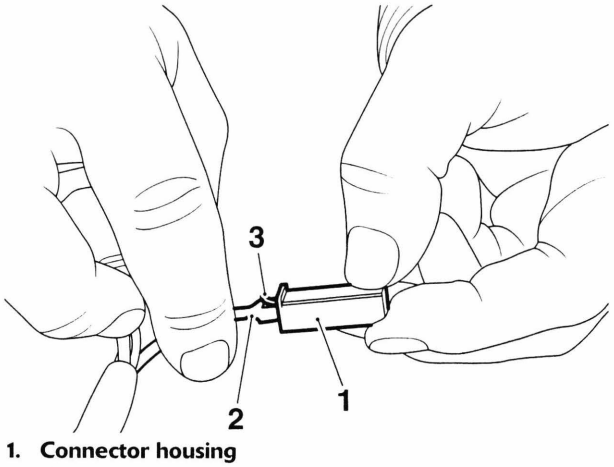

1. Connector housing
2. Connector
3. Locking device

29. Fit the green/red wire of the fly lead to the starter relay mounting where the blue wire was originally positioned. Ensure that the orientation of the locking device is as noted for removal. An audible click can be heard when the locking device is fully engaged. Gently pull the wire to ensure the connector is locked in the housing.

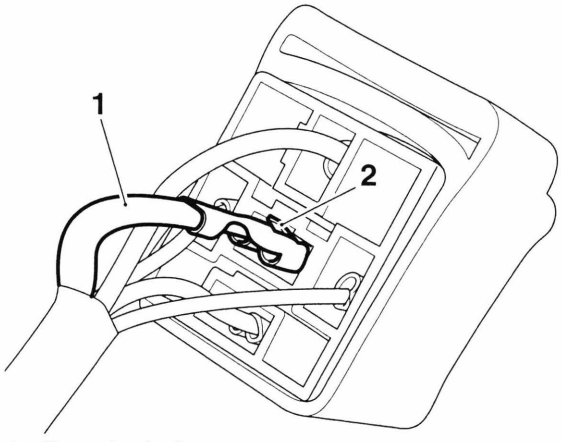

1. Green/red wire
2. Locking device

30. Connect the blue wire, with its new connector housing, to the fly lead's black connector housing.

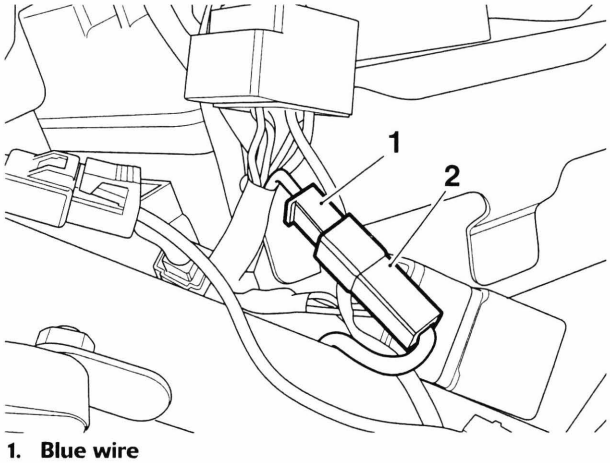

1. Blue wire
2. Fly lead

31. Fit the fly lead's fuse box to its mounting bracket.

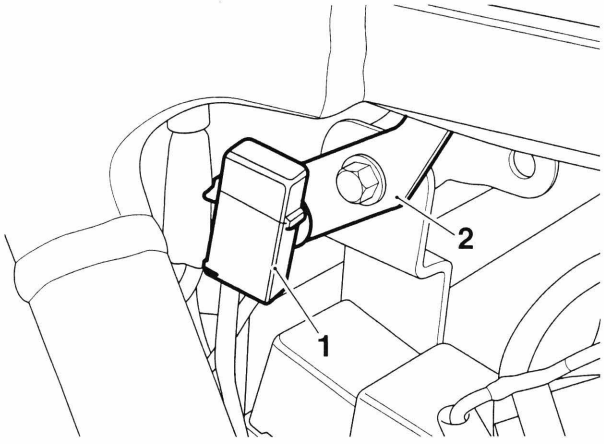

1. **Fuse**
2. **Bracket**

32. Refit the starter relay to its mounting.
33. Locate any excess fly lead cables below the relay brackets.
34. Refit the two relays to their mounting brackets. Ensure that both relays are fully engaged to their mountings.
35. If fitted, position and secure the evaporative canister to the airbox using new cable ties. Re-attach the hoses to the canister ensuring they are fitted in the positions noted for removal.
36. Refit the battery, positive (red) lead first (see page *18-19*).
37. Turn the ignition to the ON position and check the operation of the headlights, dipped and main beam. Rectify if necessary.
38. Refit the side covers (see page *17-21*).
39. Refit the rider's seat (see page *17-18*).

ECM Connector Pin Numbering - Rocket III and Classic

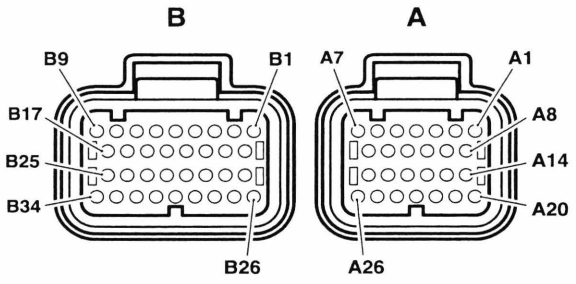

cbhs

The above illustration shows the pin numbering system used in the engine management and other electrical circuit diagrams.

The small connector pins are prefixed A and the large connector pins B. As viewed on the mating face with the ECM (as per the illustration), pins are numbered from right to left with number one in the top right corner.

ECM Connector Pin Numbering - Rocket III Touring

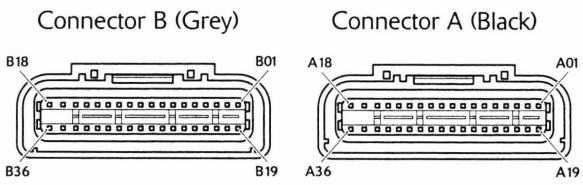

The above illustration shows the pin numbering system used in the engine management and other electrical circuit diagrams.

The black connector pins are prefixed A and the grey connector pins B. As viewed on the mating face with the ECM (as per the illustration), pins are numbered from right to left with number one in the top right corner.

Alternator Stator

The stator is an assembly of 18 coils, arranged in to three phases. It is possible to check for continuity and short circuits through the coils and to earth.

Note:

- **Only repair the stator harness between the rectifier and where the harness goes into the crankcase.**
- **Do not attempt to repair the stator coils.**
- **If the battery is not fully charged, the charging Voltage may be lower than specified when checking at 2,000 rpm.**
- **Ensure all additional accessories (auxiliary lights, heated grips, etc.) are switched off.**

Fault	Possible cause	Action
Battery not charging	Fuse 11	Check the condition of fuse 11:
	Battery	Check the condition of the battery. Test the battery using the BatteryMate 150-9. Refer to the instructions supplied with the BatteryMate 150-9. Ensure the battery is serviceable:
	Alternator	Proceed to pinpoint test 1:
	Rectifier/Regulator	Test the rectifier/regulator (see page *18-48*)

Pinpoint Tests

	Test	Result	Action
1	Check cable and terminal integrity: - Battery positive (+) - Battery negative (-) - rectifier/regulator black connector pin 1 - rectifier/regulator black connector pin 3 - rectifier/regulator grey connector pin 1 - rectifier/regulator grey connector pin 2 - rectifier/regulator grey connector pin 3	OK	Disconnect the battery leads, negative (black) lead first. Disconnect rectifier/regulator black connector and proceed to test 2
		Faulty	Rectify fault, proceed to test 4
2	Check cable continuity - rectifier/regulator black connector pin 1 to battery lead negative connector - rectifier/regulator black connector pin 3 to battery lead positive connector	OK	Reconnect the battery leads, positive (red) lead first. Reconnect the rectifier/regulator black connector. Disconnect the rectifier/regulator grey connector and proceed to test 3
		Open circuit	Locate and rectify wiring fault, proceed to test 4
3	Check resistance through the coils: - Alternator pin 1 to pin 2 - Alternator pin 2 to pin 3 - Alternator pin 3 to pin 1	0.4Ω to 0.6Ω	Proceed to test 2
		Open circuit or short circuit	If the fault is between the rectifier and the crankcase, repair the harness. Proceed to test 4 If the fault is after the crankcase, replace the unit. Proceed to test 5
4	Reconnect the harness and run the engine. Check the charging Voltage at 2,000 rpm:	13.5 V - 15 V	Action complete - quit test
		Fault still present	Disconnect the rectifier/regulator grey connector and proceed to test 5

	Test	Result	Action
5	Check the alternator AC output Voltage at 850 rpm by probing the 3-pin stator connector as follows: - Positive (+) probe to pin 1 negative (-) probe to pin 2 - Positive (+) probe to pin 2 negative (-) probe to pin 3 - Positive (+) probe to pin 3 negative (-) probe to pin 1	15 V AC to 25 V AC	Test rectifier/regulator (see page *18-48*)
		Less than 15 V AC	Replace unit. Proceed to test 6
6	Reconnect the harness and run the engine. Check the charging Voltage at 2,000 rpm:	13.5 V - 15 V	Action complete - quit test
		Fault still present	Contact Triumph service

Circuit Diagram

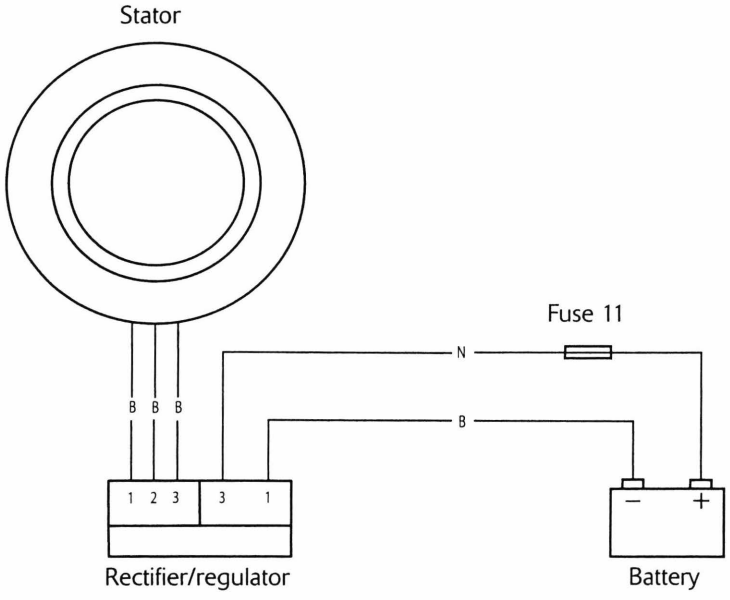

alternator

Rectifier/Regulator

Internally the rectifier/regulator consists of three diodes, one between each input and the positive terminal, and three field effect transistors (FETs), one between each input and the ground terminal.

As the Voltage of the AC signal from the generator rises, the Voltage controller switches the FETs to avoid over Voltage on the output.

The diodes and FETs can be checked using a multimeter on DIODE setting. Disconnect the two electrical connectors from the rectifier/regulator and check the readings as indicated below.

Note:

- **This test does not check for Voltage regulation.**

Fault	Possible cause	Action
Battery not charging	Fuse 11	Check the condition of fuse 11:
	Battery	Check the condition of the battery. Test the battery using the BatteryMate 150-9. Refer to the instructions supplied with the BatteryMate 150-9. Ensure the battery is serviceable:
	Rectifier/Regulator	Disconnect the black and the grey connectors from the rectifier/regulator and proceed to pinpoint test 1:
	Alternator	Test alternator stator (see page *18-46*)

Pinpoint Tests

	Test	Result	Action
1	Check FET forward bias: - Positive (+) probe to rectifier black socket pin 1 to: Negative (-) probe to rectifier grey socket pin 1 Negative (-) probe to rectifier grey socket pin 2 Negative (-) probe to rectifier grey socket pin 3	0.1 V to 0.3 V	Proceed to test 2
		Open circuit or short circuit	Replace the unit. Proceed to test 4
2	Check DIODES function forward bias: - Negative (-) probe to rectifier black socket pin 3 to: Positive (+) probe to rectifier grey socket pin 1 Positive (+) probe to rectifier grey socket pin 2 Positive (+) probe to rectifier grey socket pin 3	0.4 V to 0.7 V	Proceed to test 3
		Open circuit or short circuit	Replace the unit. Proceed to test 4
3	Check diodes reverse bias: - Negative (-) probe to rectifier black socket pin 1 to: Positive (+) probe to rectifier grey socket pin 1 Positive (+) probe to rectifier grey socket pin 2 Positive (+) probe to rectifier grey socket pin 3 - Positive (+) probe to rectifier black socket pin 3 to: Negative (-) probe to rectifier grey socket pin 1 Negative (-) probe to rectifier grey socket pin 2 Negative (-) probe to rectifier grey socket pin 3	More than 1.4 V or OL on meter	Proceed to test 4
		Less than 1.4 V or short circuit	Replace the unit. Proceed to test 4

	Test	Result	Action
4	Reconnect the harness and run the engine. Check the charging Voltage at 2,000 rpm:	13 V - 15 V	Action complete - quit test
		Fault still present	Test alternator stator (see page *18-46*)
			If alternator stator is serviceable, contact Triumph service

Circuit Diagram

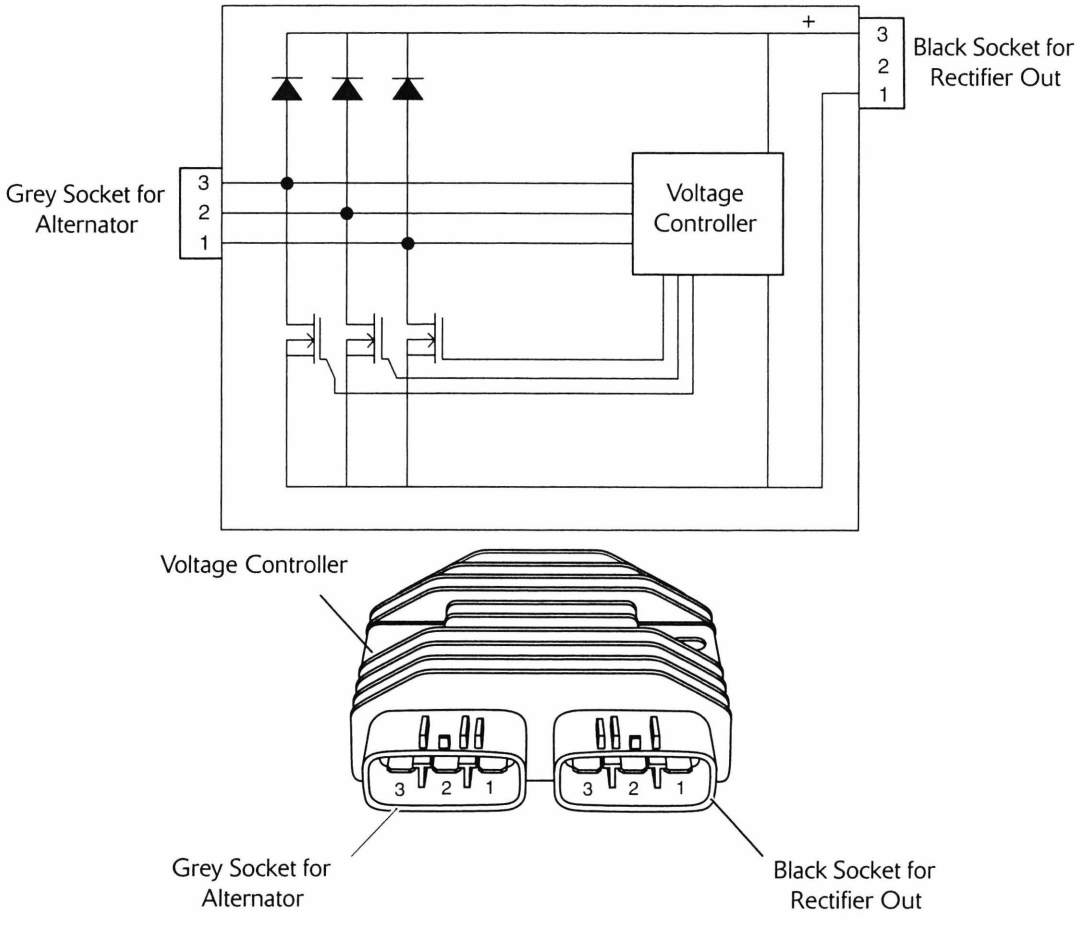

Lighting Circuit - Rocket III and Classic

Key to Circuit Diagram

Key	Item Description
1	Fuse Box (Fuses 2, 9 and 10)
2	Ignition Switch
3	Instrument Assembly
4	Instrument Illumination
5	Warning Lights
6	Engine Harness Connector
7	Oil Pressure Switch
8	Tail Light
9	Number Plate Light
10	Headlight 2
11	Headlight 1
12	Starter Relay
13	Headlight Dip Switch
14	Accessory Heated Handlebar Grips

Key To Wiring Colour Codes

Code	Wiring Colour
B	Black
U	Blue
N	Brown
G	Green
S	Slate/Grey
O	Orange
K	Pink
R	Red
P	Purple
W	White
Y	Yellow
LG	Light Green
LU	Light Blue

Circuit Diagram - Lighting - Rocket III and Classic

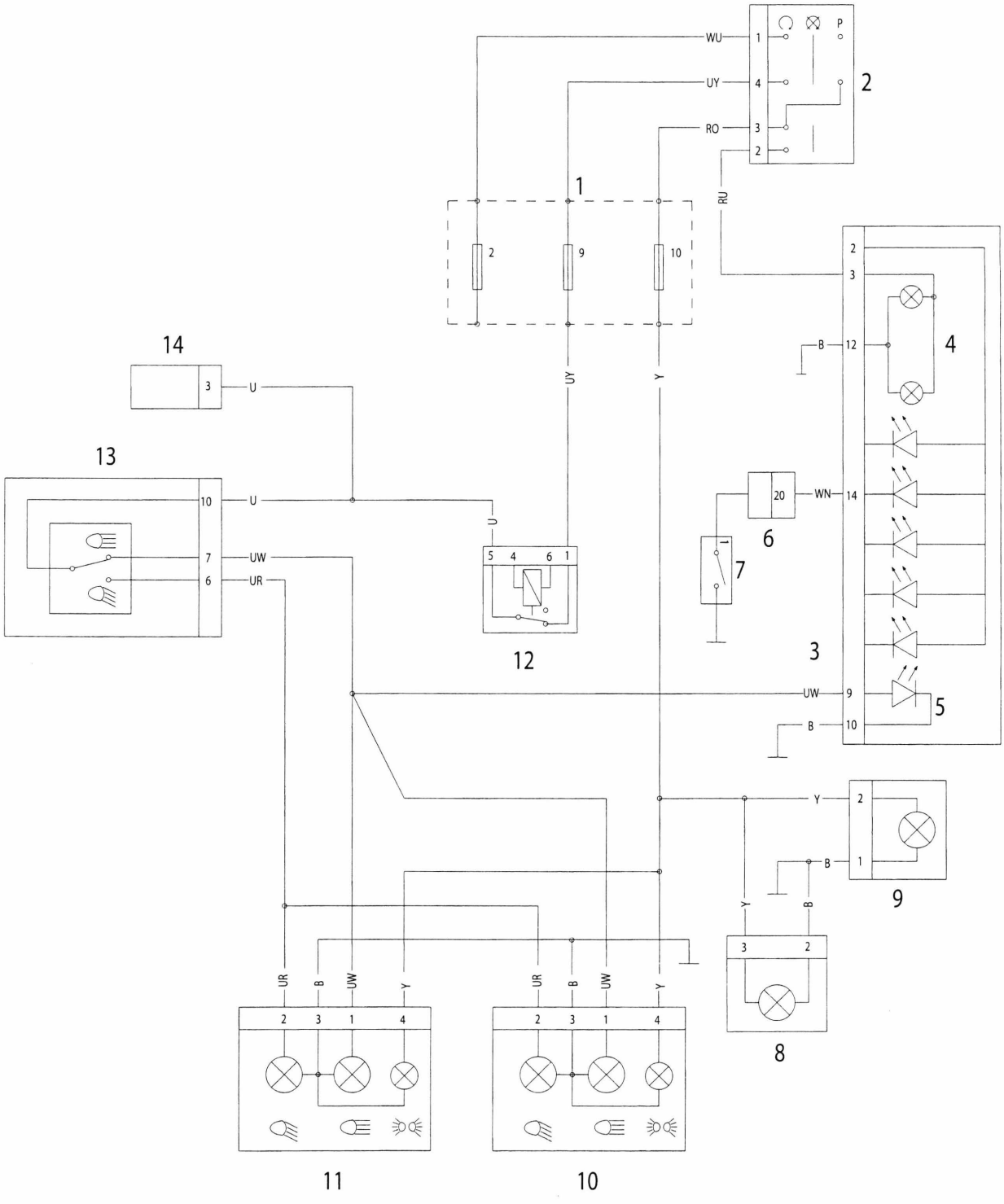

Lighting Circuit - Rocket III Touring

Key to Circuit Diagram

Key	Item Description
1	Fuse Box (Fuses 1 and 2)
2	Accessory Heated Handlebar Grips
3	Left Hand Switch Cube
4	Headlight Dip Switch
5	Fog / Auxiliary Switch
6	Accessory Lights Connector
7	Headlight
8	Headlight Bulb Dip Beam
9	Headlight Bulb Main Beam
10	Oil Pressure Switch
11	Throttle Body Connector
12	Instruments
13	Position Light Bulb
14	Starter Relay
15	Tail Light
16	Number Plate Light
17	Fuse Box (Fuses 9 and 10)
18	Ignition Switch
19	Accessory Light Relay
20	Left Hand Accessory Light
21	Right Hand Accessory Light

Key To Wiring Colour Codes

Code	Wiring Colour
B	Black
U	Blue
N	Brown
G	Green
S	Slate/Grey
O	Orange
K	Pink
R	Red
P	Purple
W	White
Y	Yellow
LG	Light Green
LU	Light Blue

Circuit Diagram - Lighting - Rocket III Touring

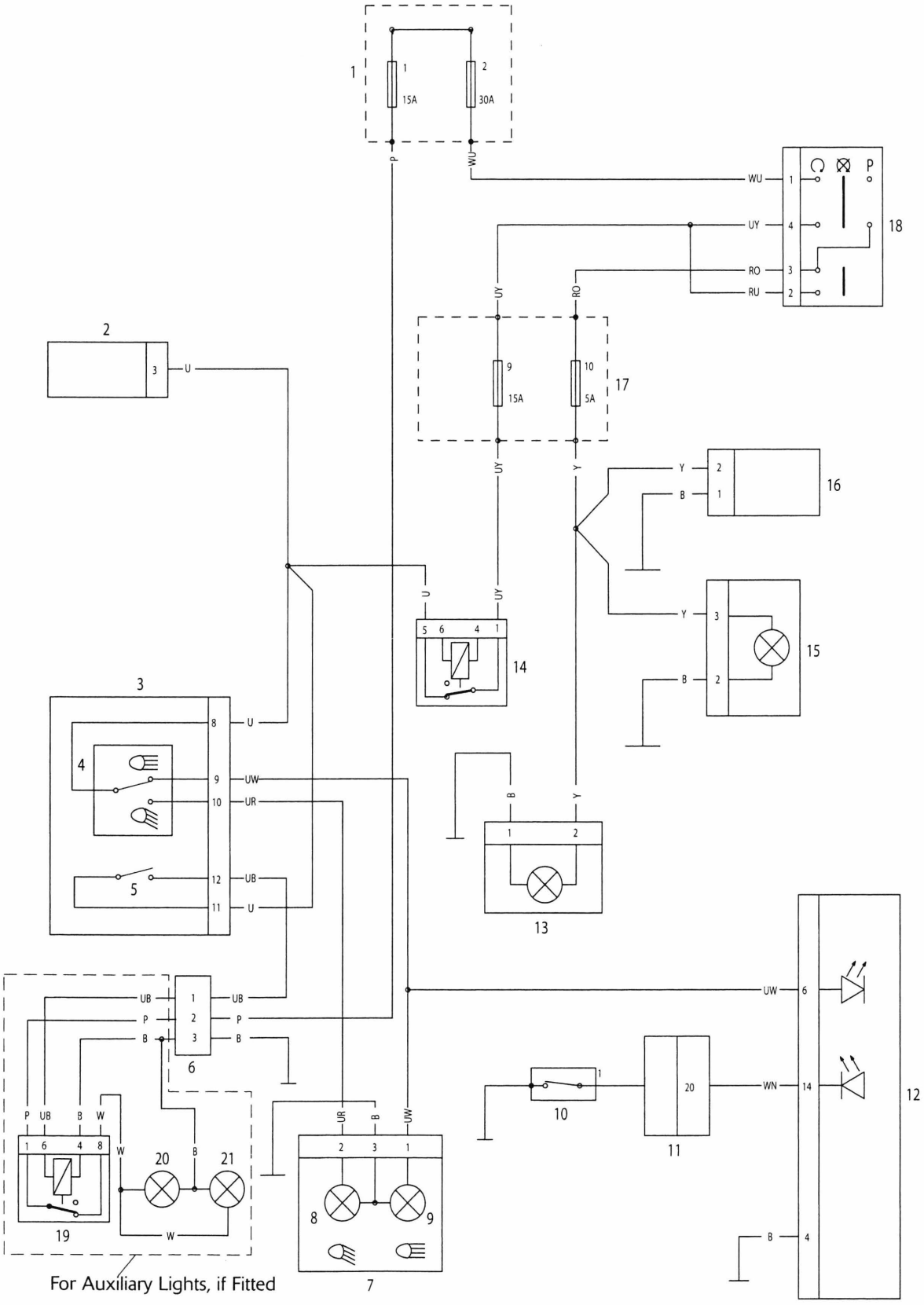

Lighting Circuit - Rocket III Roadster

Key to Circuit Diagram

Key	Item Description
1	Main Fuse Box (Fuses 1 and 2)
2	Ignition Switch
3	Licence Plate Lamp
4	Tail Lamp
5	Oil Pressure Switch
6	Engine Sub-Harness Connector
7	Tachometer, Oil Pressure Warning Light
8	Tachometer, Main Beam Indicator Light
9	Headlamp 1
10	Headlamp 2
11	Accessory Lights
12	Headlamp Dip Switch
13	Accessory Heated Handlebar Grips
14	Accessory Clock
15	Main Fuse Box (Fuses 5, 8 and 10)
16	Starter Relay

Key To Wiring Colour Codes

Code	Wiring Colour
B	Black
U	Blue
N	Brown
G	Green
S	Slate/Grey
O	Orange
K	Pink
R	Red
P	Purple
W	White
Y	Yellow
LG	Light Green
LU	Light Blue

Circuit Diagram - Lighting - Rocket III Roadster

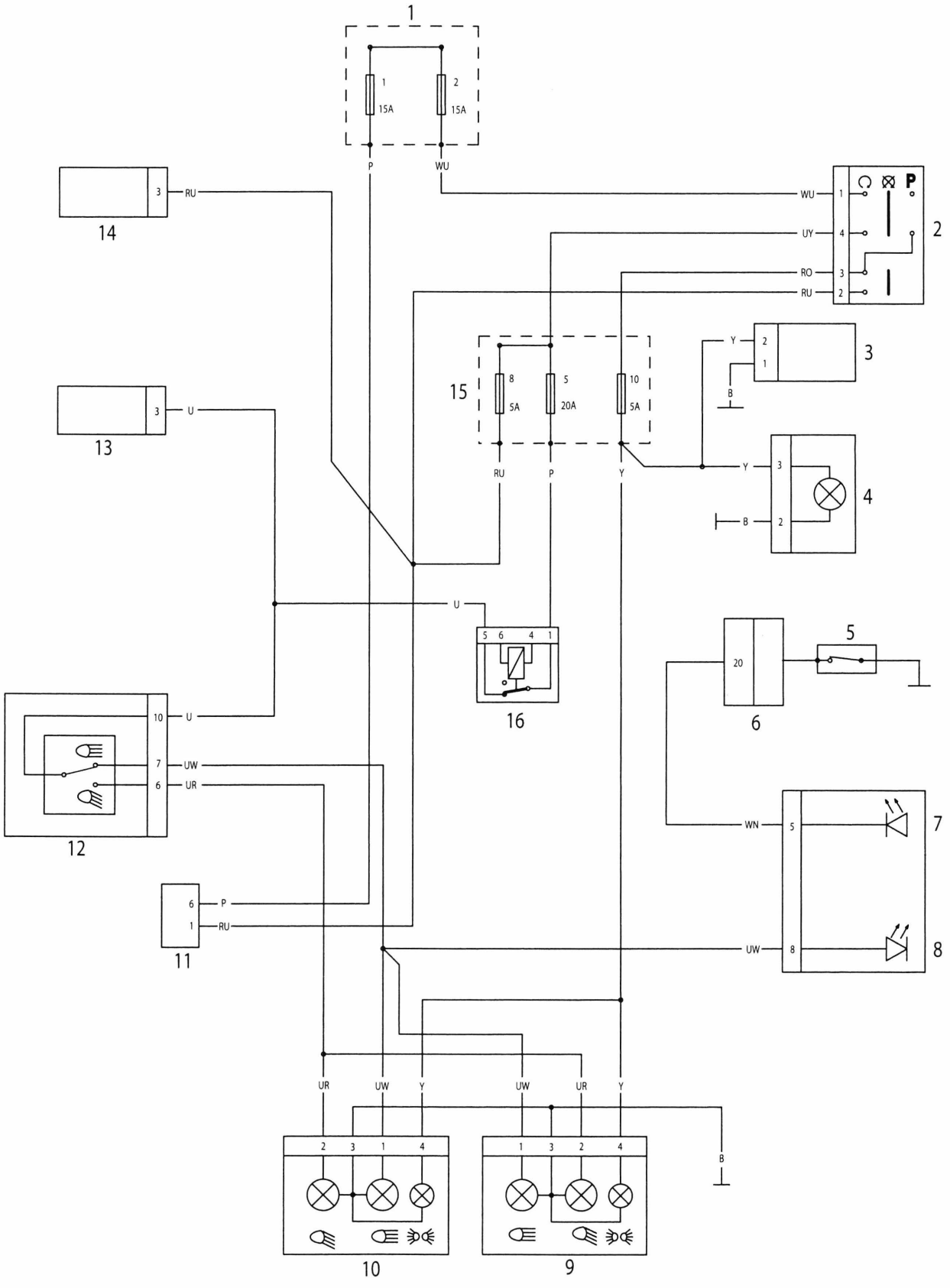

Lighting Circuit - Rocket III Roadster with headlight relay

Key to Circuit Diagram

Key	Item Description
1	Main Fuse Box (Fuses 1 and 2)
2	Ignition Switch
3	Licence Plate Lamp
4	Tail Lamp
5	Oil Pressure Switch
6	Engine Sub-Harness Connector
7	Tachometer, Oil Pressure Warning Light
8	Tachometer, Main Beam Indicator Light
9	Headlamp 1
10	Headlamp 2
11	Accessory Lights
12	Headlamp Dip Switch
13	Accessory Heated Handlebar Grips
14	Accessory Clock
15	Main Fuse Box (Fuses 5, 8 and 10)
16	Starter Relay
17	Headlight Relay

Key To Wiring Colour Codes

Code	Wiring Colour
B	Black
U	Blue
N	Brown
G	Green
S	Slate/Grey
O	Orange
K	Pink
R	Red
P	Purple
W	White
Y	Yellow
LG	Light Green
LU	Light Blue

Circuit Diagram - Lighting - Rocket III Roadster with headlight relay

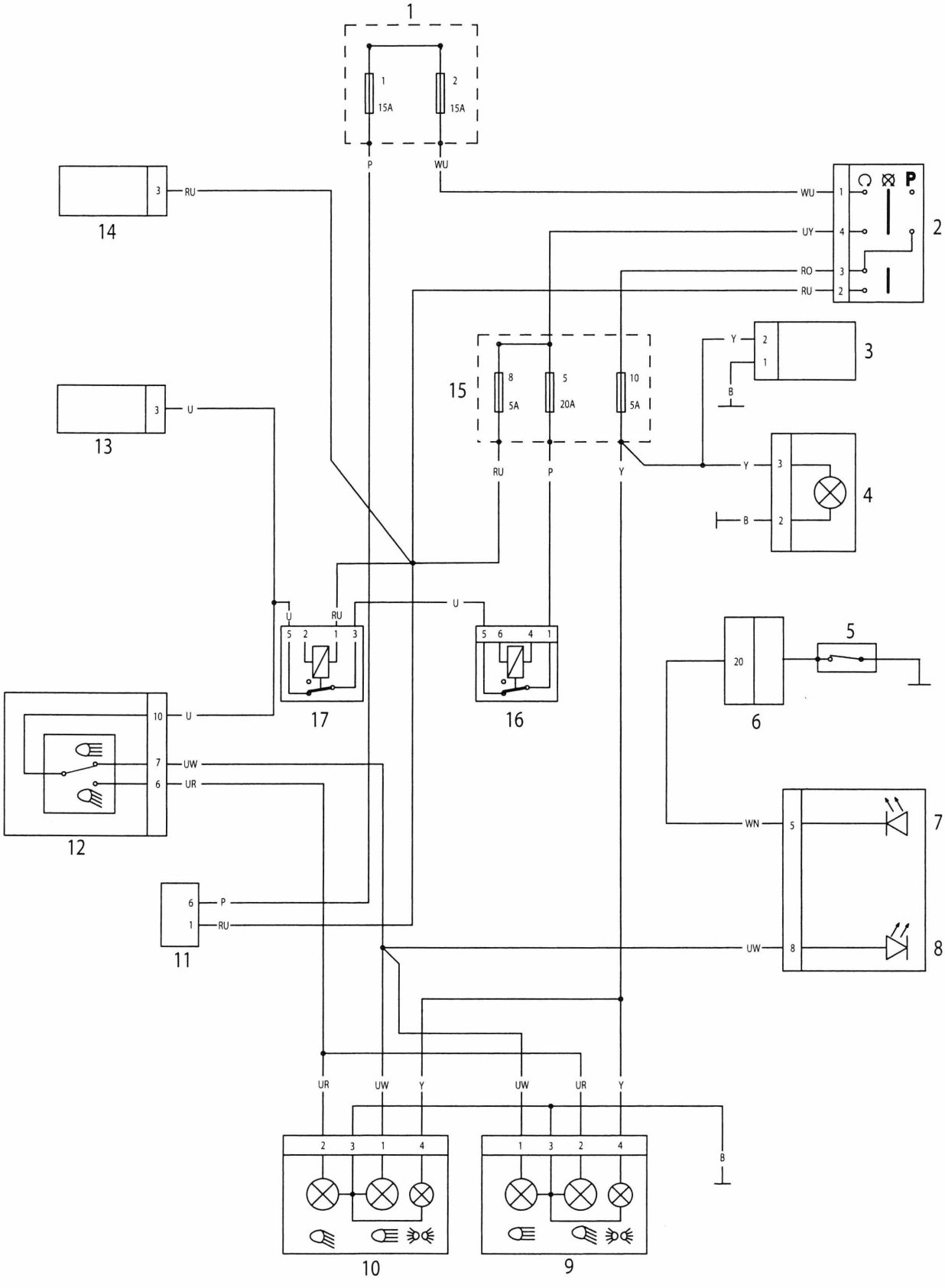

Starting and Charging Circuit - Rocket III and Classic

Key to Circuit Diagram

Key	Item Description
1	Battery
2	Starter Motor
3	Fuse 11
4	Starter Relay
5	Engine Control Module
6	Gear Position Sensor
7	Clutch Switch
8	Sidestand Switch
9	Engine Management System Relay
10	Fuel Pump Relay
11	Instrument Assembly
12	Accessory Fuel Gauge
13	Alarm Control Unit Or Harness Link Connector
14	Starter Switch
15	Engine Kill Switch
16	Ignition Switch
17	Fuse Box (Fuses 5 and 9)
18	Fuse Box (Fuses 2 and 6)
19	Regulator / Rectifier
20	Alternator

Key To Wiring Colour Codes

Code	Wiring Colour
B	Black
U	Blue
N	Brown
G	Green
S	Slate/Grey
O	Orange
K	Pink
R	Red
P	Purple
W	White
Y	Yellow
LG	Light Green
LU	Light Blue

Circuit Diagram - Starting and Charging - Rocket III and Classic

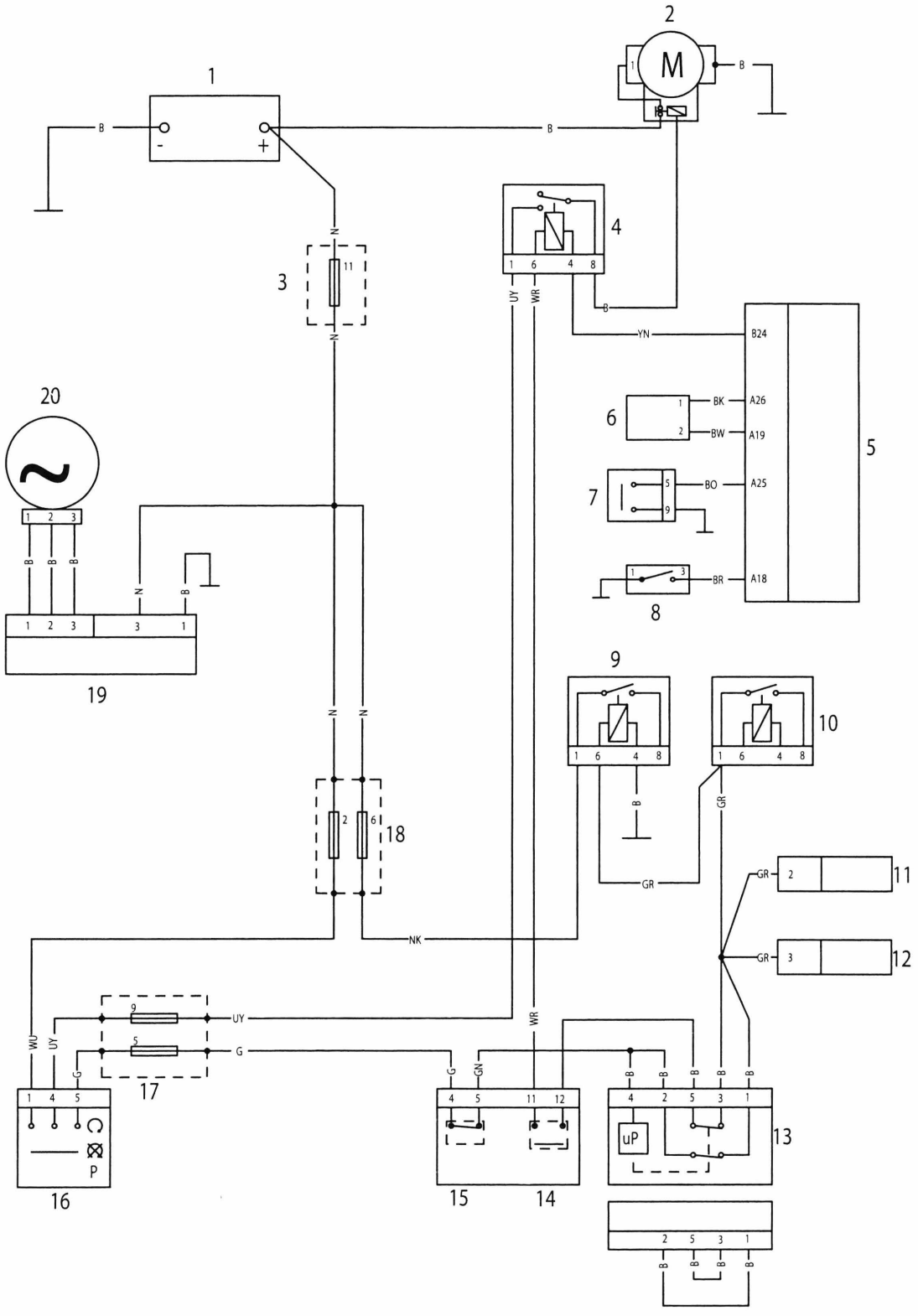

Starting and Charging Circuit - Rocket III Touring

Key to Circuit Diagram

Key	Item Description
1	Battery
2	Battery + VE Connector
3	Fuse Box (Fuse 11)
4	Alternator
5	Fuse Box (Fuses 1, 2, 3, 4, 6 and 7)
6	Fuse Box (Fuses 5 and 9)
7	Ignition Switch
8	Start switch
9	Alarm
10	Instrument Assembly
11	Fuel Pump Relay
12	Engine Control Module
13	Cooling Fan Relay
14	Engine Management System Relay
15	Starter Relay
16	Starter Motor
17	Regulator/Rectifier
18	Kill switch
19	Scroll button

Key To Wiring Colour Codes

Code	Wiring Colour
B	Black
U	Blue
N	Brown
G	Green
S	Slate/Grey
O	Orange
K	Pink
R	Red
P	Purple
W	White
Y	Yellow
LG	Light Green
LU	Light Blue

Circuit Diagram - Starting and Charging - Rocket III Touring

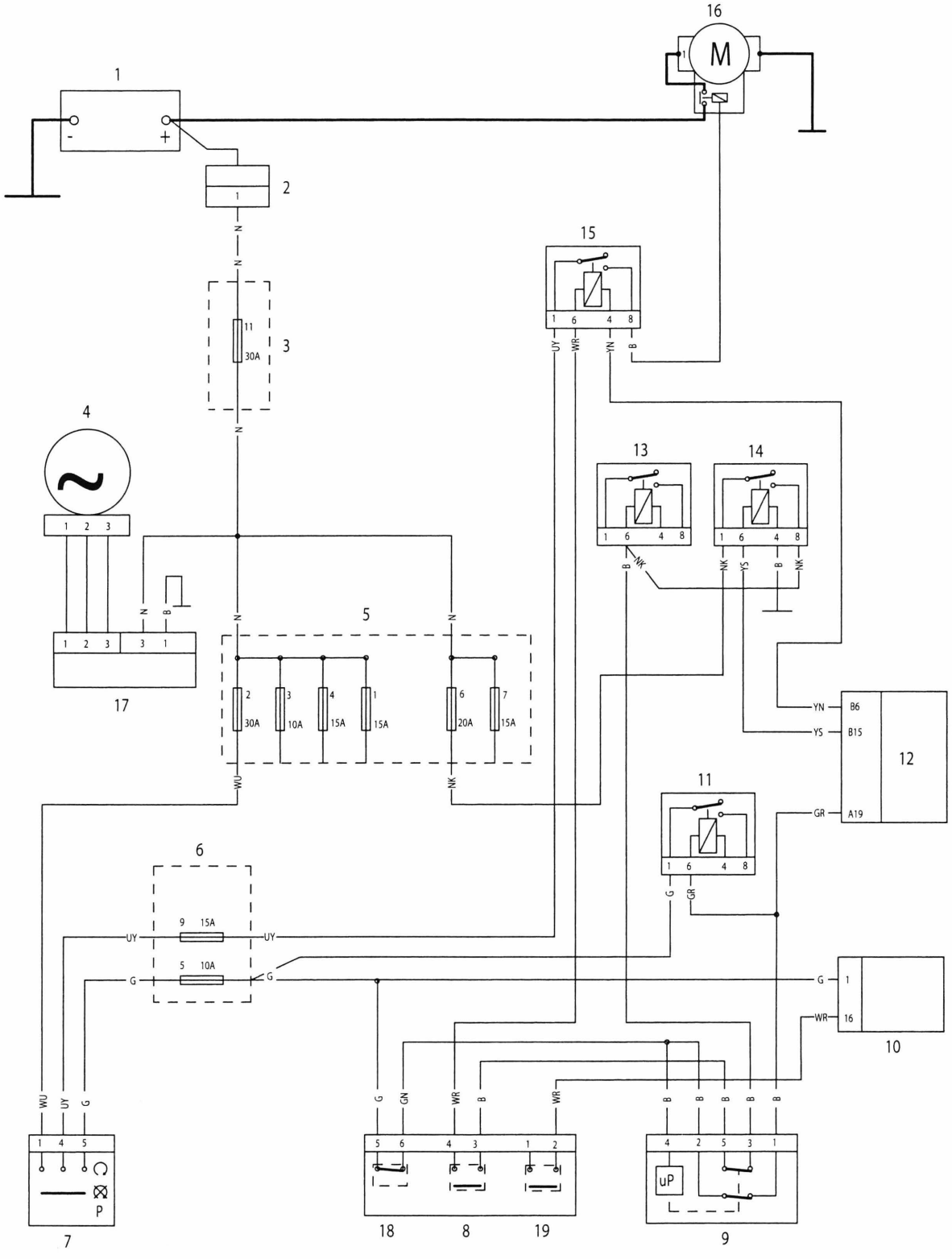

Starting and Charging Circuit without Headlight Relay - Rocket III Roadster

Key to Circuit Diagram

Key	Item Description
1	Battery
2	Battery Sub-Harness Connection
3	Main Fuse Box (Fuse 11)
4	ABS Fuse Box (Fuses 1 and 2)
5	Starter Relay
6	Starter Motor
7	Engine Control Module
8	Fuel Pump Relay
9	Engine Management System Relay
10	Speedometer
11	Tachometer
12	Alarm
13	Starter Button
14	Engine Kill Switch
15	Ignition Switch
16	Main Fuse Box (Fuses 5, 8 and 9)
17	Main Fuse Box (Fuses 1, 2, 3, 4, 6 and 7)
18	Rectifier/Regulator
19	Alternator

Key To Wiring Colour Codes

Code	Wiring Colour
B	Black
U	Blue
N	Brown
G	Green
S	Slate/Grey
O	Orange
K	Pink
R	Red
P	Purple
W	White
Y	Yellow
LG	Light Green
LU	Light Blue

Circuit Diagram - Starting and Charging without Headlight Relay - Rocket III Roadster

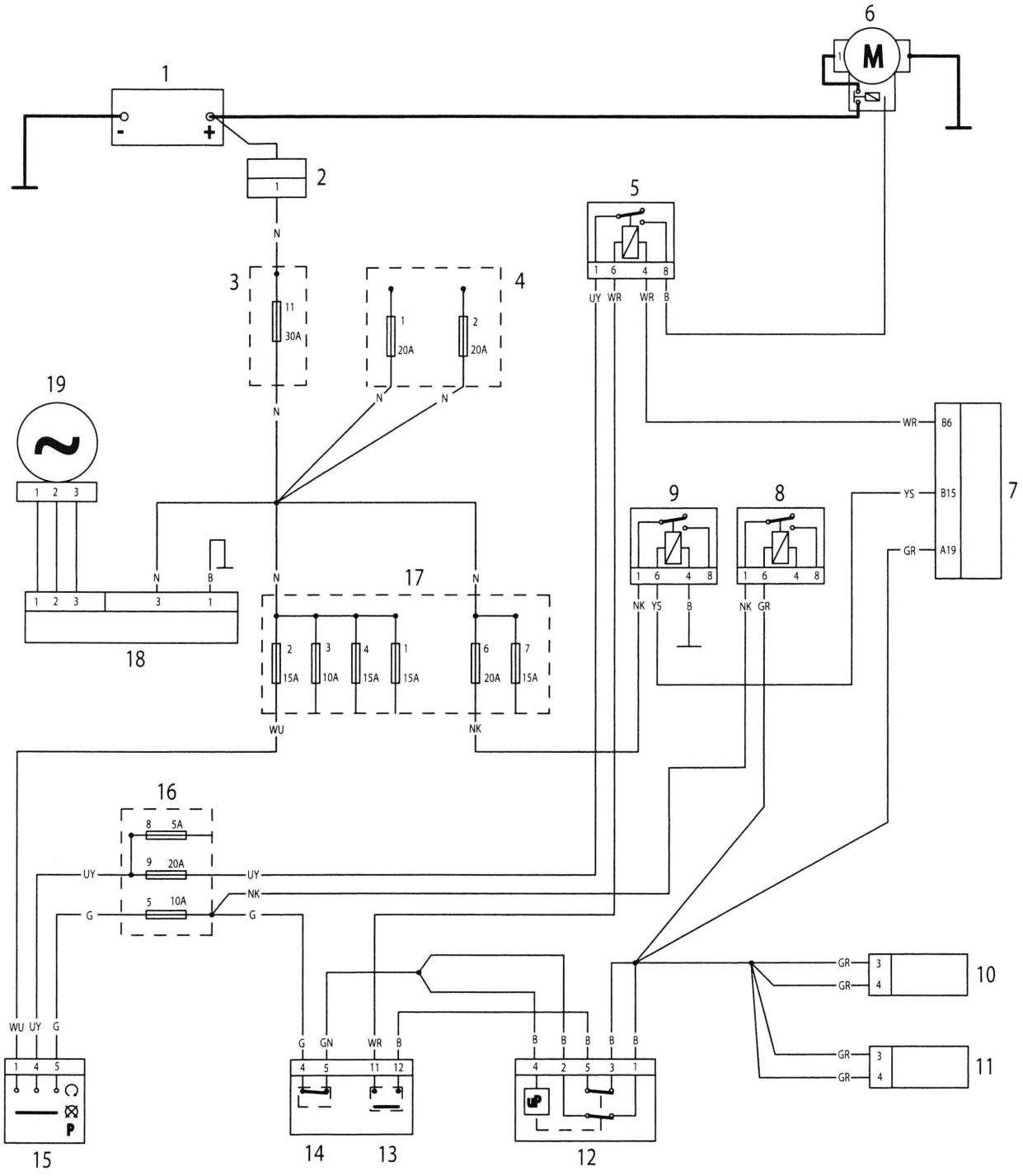

Starting and Charging Circuit with Headlight Relay - Rocket III Roadster

Key to Circuit Diagram

Key	Item Description
1	Battery
2	Battery Sub-Harness Connection
3	Main Fuse Box (Fuse 11)
4	ABS Fuse Box (Fuses 1 and 2)
5	Starter Relay
6	Starter Motor
7	Engine Control Module
8	Fuel Pump Relay
9	Engine Management System Relay
10	Speedometer
11	Tachometer
12	Alarm
13	Starter Button
14	Engine Kill Switch
15	Ignition Switch
16	Main Fuse Box (Fuses 1, 2, 3, 4, 5, 6 and 7)
17	Rectifier/Regulator
18	Alternator

Key To Wiring Colour Codes

Code	Wiring Colour
B	Black
U	Blue
N	Brown
G	Green
S	Slate/Grey
O	Orange
K	Pink
R	Red
P	Purple
W	White
Y	Yellow
LG	Light Green
LU	Light Blue

Starting and Charging Circuit with Headlight Relay - Rocket III Roadster

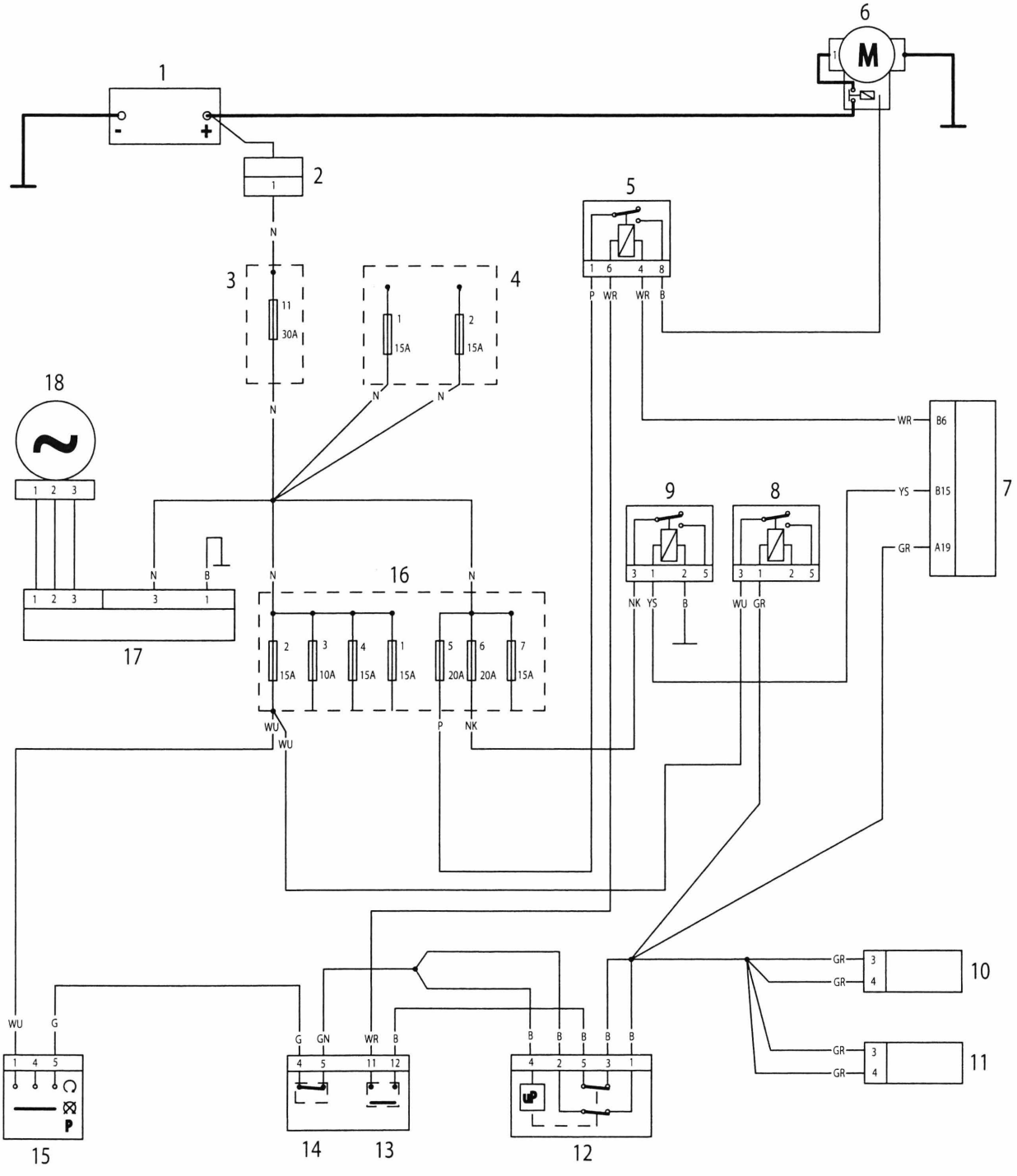

Auxiliary and Accessory Circuit - Rocket III and Classic

Key to Circuit Diagram

Key	Item Description
1	Fuse Box (1, 2, 3, 4 and 8)
2	Ignition Switch
3	Front Brake Light Switch
4	Rear Brake Light Switch
5	Brake / Tail Light Assembly
6	Accessory Fuel Gauge
7	Diagnostic Connector
8	Rear Left Direction Indicator
9	Rear Right Direction Indicator
10	Accessory Alarm Control Unit
11	Front Left Direction Indicator
12	Front Right Direction Indicator
13a	Instrument Assembly Connector A
13b	Instrument Assembly Connector B
14	Direction Indicator Switch
15	Horn Switch
16	Horn
17	Indicator Relay
18	Accessory Lights
19	Accessory Heated Handlebar Grips
20	Accessory Clock
21	Accessory Socket

Key To Wiring Colour Codes

Code	Wiring Colour
B	Black
U	Blue
N	Brown
G	Green
S	Slate/Grey
O	Orange
K	Pink
R	Red
P	Purple
W	White
Y	Yellow
LG	Light Green
LU	Light Blue

Note:

- **The Instrument Assembly Connector 13b pin 3, replaces pin 17 of the Instrument Assembly Connector 13a.**
- **For detailed information refer to the circuit diagram:**
  Complete System - Rocket III and Classic with / without Instrument modification and Technical News 99.

Circuit Diagram - Auxiliary and Accessory - Rocket III and Classic

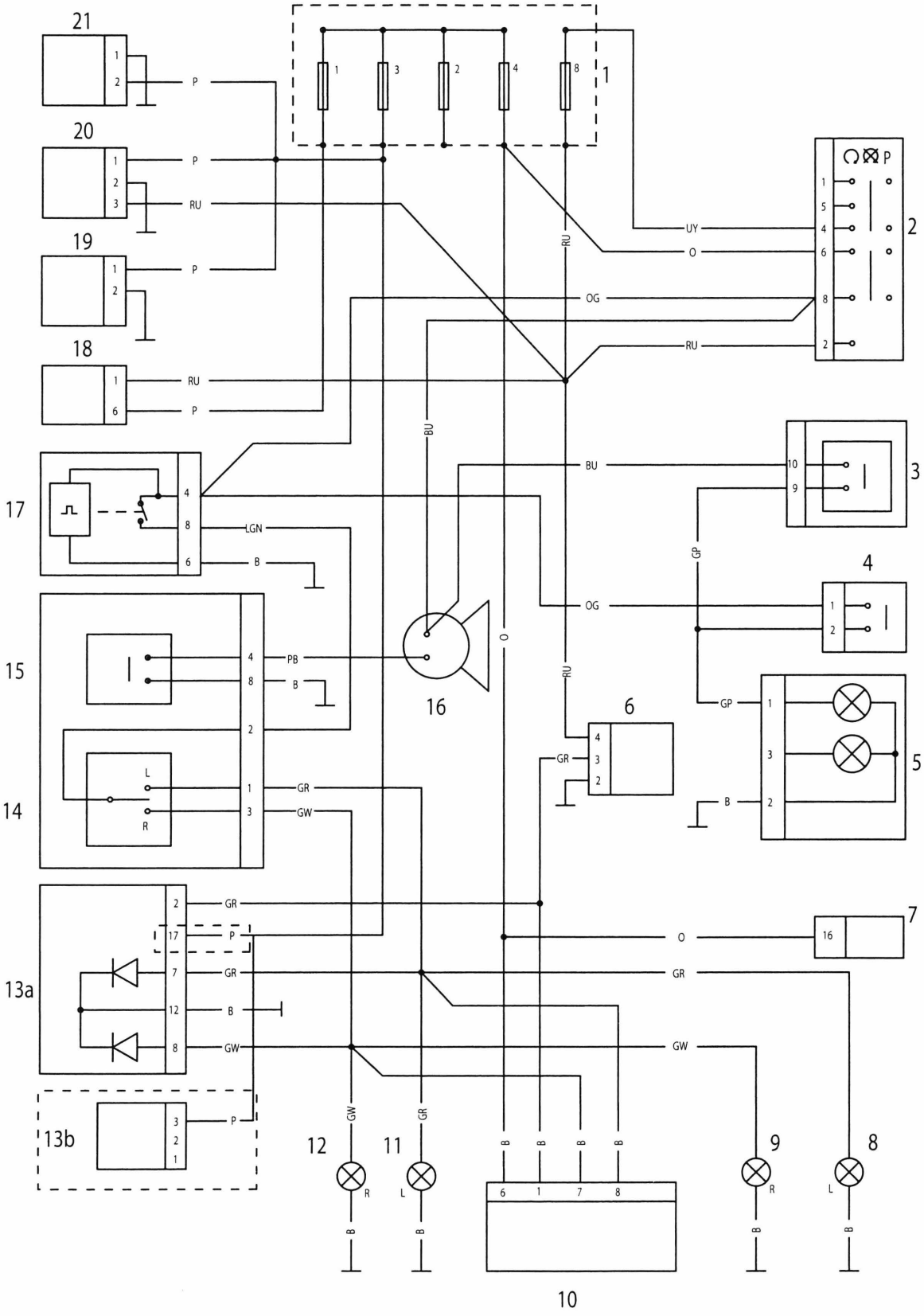

Auxiliary and Accessory Circuit - Rocket III Touring

Key to Circuit Diagram

Key	Item Description
1	Accessory Socket
2	Accessory Heated Handlebar Grips
3	GPS
4	Diode Pack
5	Left Hand Switch Cube
6	Horn Switch
7	Direction Indicator Switch
8	Instrument Assembly
9	Front Right Direction Indicator
10	Front Left Direction Indicator
11	Alarm
12	Rear Right Direction Indicator
13	Rear Left Direction Indicator
14	Diagnostic Connector
15	Rear Light Unit
16	Tail Light
17	Brake Light
18	Horn
19	Foot brake switch
20	Right Hand Switch Cube (Brake Switch)
21	Ignition Switch
22	Fuse Box (1, 2, 3 and 5)

Key To Wiring Colour Codes

Code	Wiring Colour
B	Black
U	Blue
N	Brown
G	Green
S	Slate/Grey
O	Orange
K	Pink
R	Red
P	Purple
W	White
Y	Yellow
LG	Light Green
LU	Light Blue

Circuit Diagram - Auxiliary and Accessory - Rocket III Touring

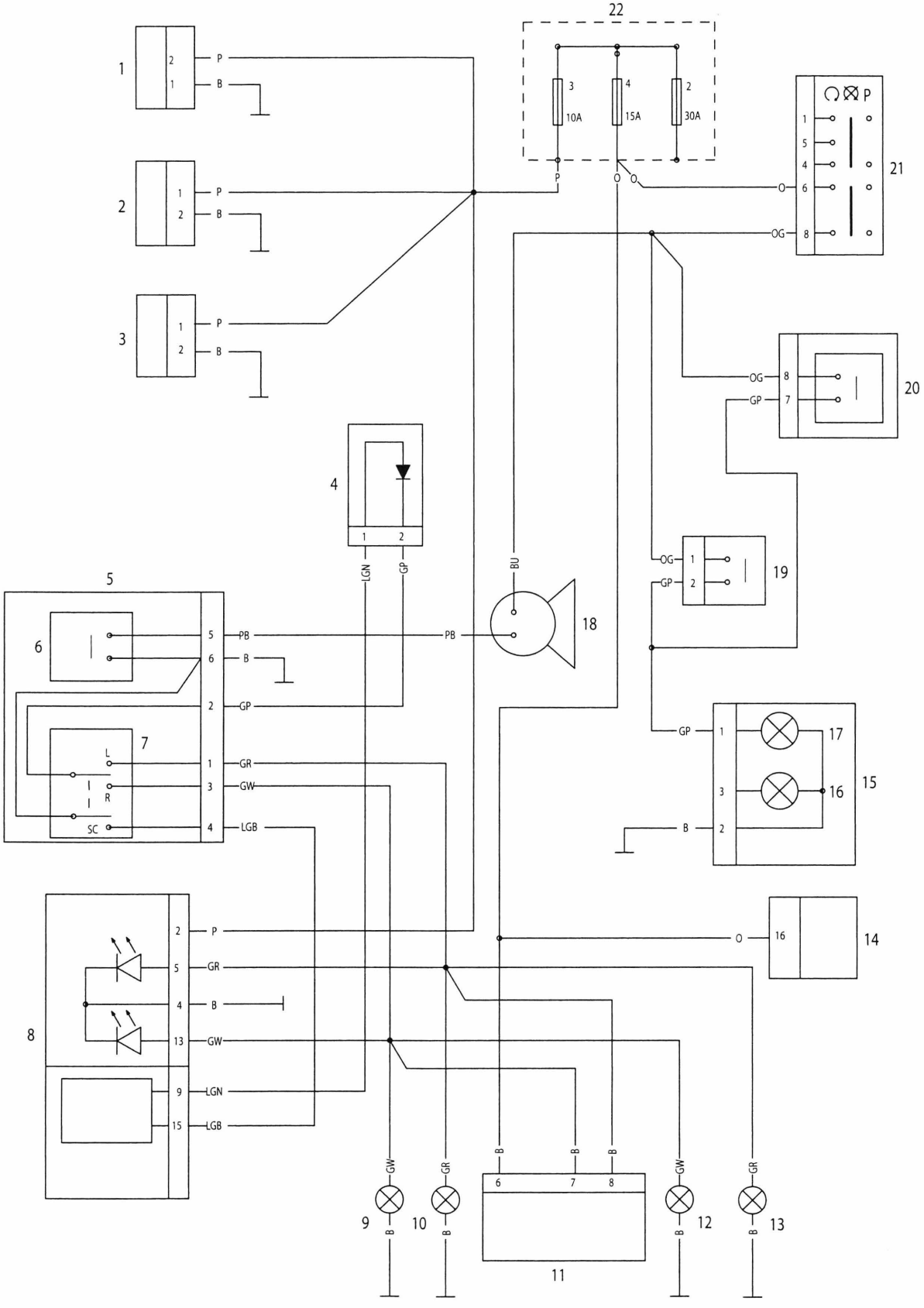

Auxiliary and Accessory Circuit - Rocket III Roadster

Key to Circuit Diagram

Key	Item Description
1	Main Fuse Box (2, 3, and 4)
2	Ignition Switch
3	Right Hand Switch Cube
4	Brake Lamp
5	Diagnostic Connector
6	Rear Left Direction Indicator
7	Rear Right Direction Indicator
8	Accessory Alarm Control Unit
9	Front Right Direction Indicator
10	Front Left Direction Indicator
11	Speedometer
12	Tachometer
13	Direction Indicator Switch
14	Horn Switch
15	Direction Indicator Unit
16	Clock
17	Accessory Heated Handlebar Grips
18	Accessory Socket
19	Horn
20	Rear Brake Switch

Key To Wiring Colour Codes

Code	Wiring Colour
B	Black
U	Blue
N	Brown
G	Green
S	Slate/Grey
O	Orange
K	Pink
R	Red
P	Purple
W	White
Y	Yellow
LG	Light Green
LU	Light Blue

Circuit Diagram - Auxiliary and Accessory - Rocket III Roadster

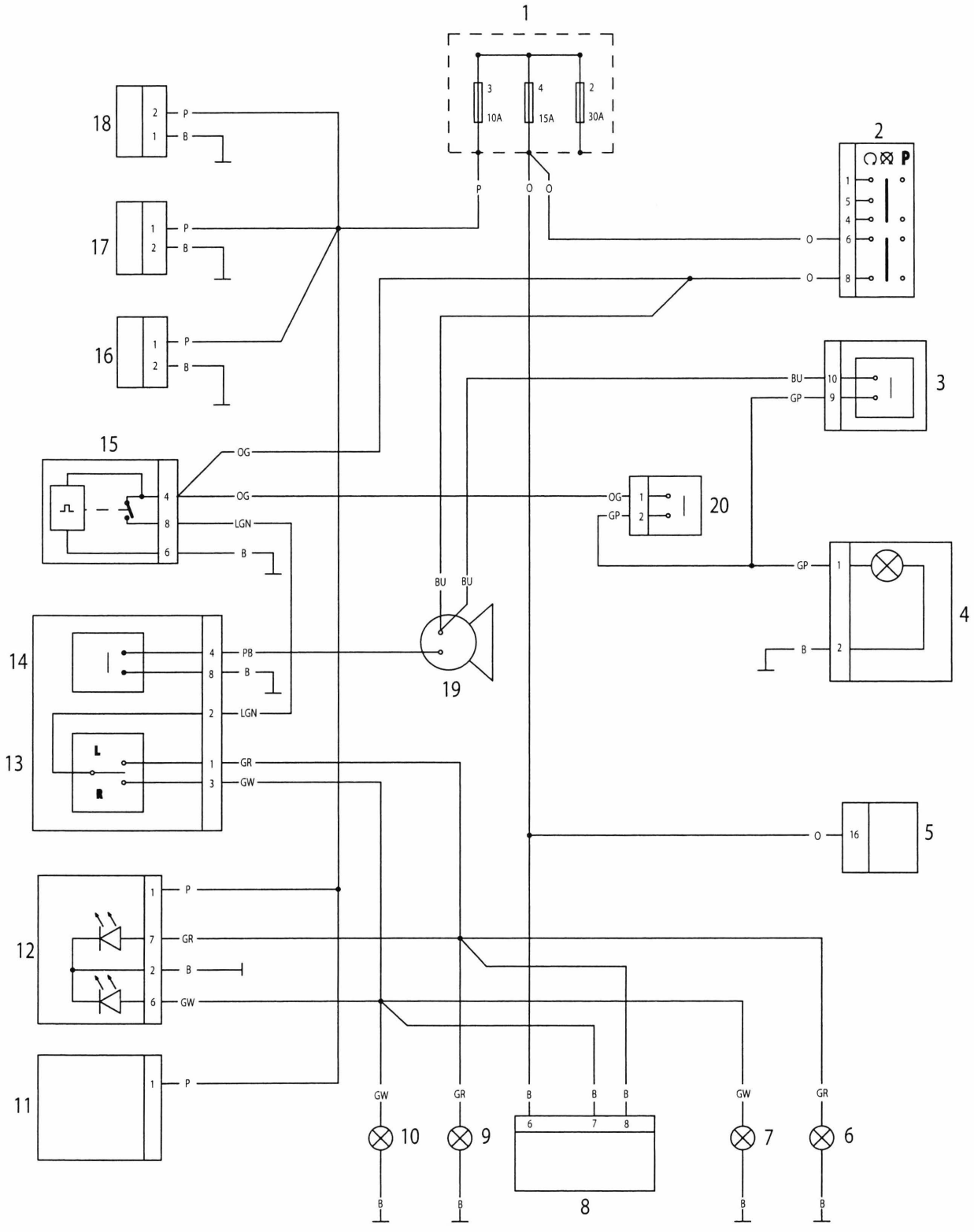

Complete System - Rocket III and Classic with / without Instrument modification

Key to Circuit Diagram

Key	Item Description
1a	Instrument Assembly
1b	Instrument Connector Modification
2	Vehicle Speed Sensor
3	Front Brake Lever Switch
4	Engine Kill Switch
5	Starter Button
6	Fuel Gauge (Accessory)
7	Engine Control Module
8	Gear Position Sensor
9	Lambda Sensor
10	Fuel Injector 1
11	Fuel Injector 2
12	Fuel Injector 3
13	2nd Throttle Actuator
14	Idle Speed Control Actuator
15	Fall Detection Switch
16	Inlet Air Temperature Sensor
17	2nd Throttle Potentiometer
18	Throttle Potentiometer
19	Coolant Temperature Sensor
20	Oil Pressure Switch
21	Engine Sub-Harness Connector
22	Ambient Pressure Sensor
23	MAP Sensor
24	Purge Valve
25	Ignition Coil 1
26	Ignition Coil 2
27	Ignition Coil 3
28	Engine Management Relay
29	Fuel Pump Relay
30	Fuel Pump and Level Sensor Assembly
31	Cooling Fan Relay
32	Cooling Fan
33	Diagnostic Connector
34	Sidestand Switch

Key	Item Description
35	Engine Earth
36	Crankshaft Sensor
37	Rear Brake Lever Switch
38	RH Rear Indicator
39	Rear Light
40	Number Plate Light
41	LH Rear Indicator
42	Alarm Connector (Accessory)
43	Starter Motor / Solenoid Assembly
44	Battery
45	Starter Relay
46	Rectifier / Regulator
47	Alternator
48	Fuse Box
49	Ignition Switch
50	Accessory Light Connector
51	Accessory Socket
52	Heated Handlebar Grips Connector (Accessory)
53	Clock Connector (Accessory)
54	Clutch Lever Switch
55	Horn Button
56	Direction Indicator Switch
57	Headlight Dip Switch
58	Direction Indicator Unit
59	LH Front Indicator
60	Position Light 1
61	Headlight 1
62	Position Light 2
63	Headlight 2
64	Horn
65	RH Front Indicator

Circuit Diagram - Complete System - Rocket III and Classic with / without Instrument modification

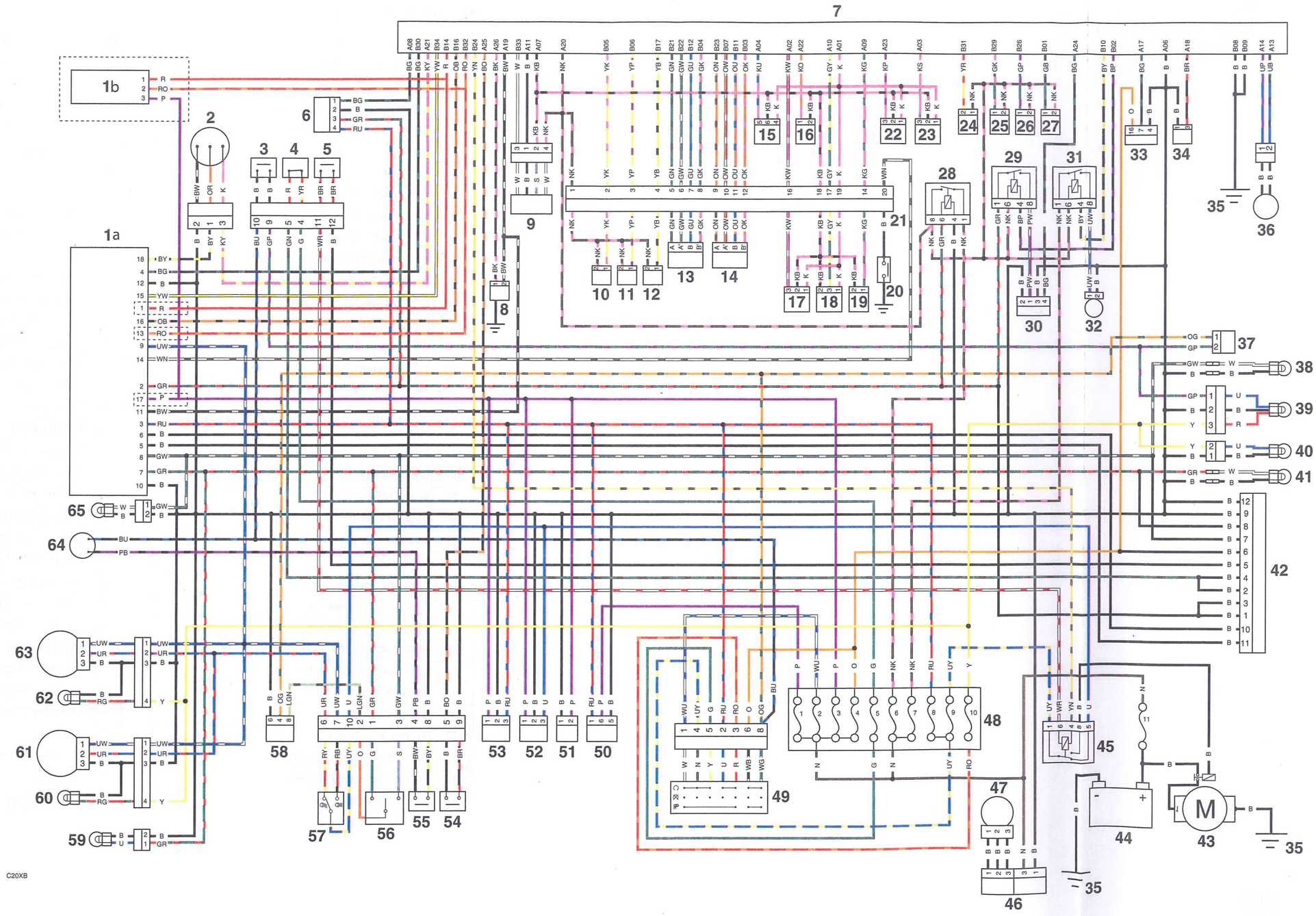

Complete System - Rocket III Touring - without ABS

Key to Circuit Diagram

Key	Item Description
1	Engine Control Module
2	Vehicle Speed Sensor
3	Engine Management Relay
4	Engine Sub-Harness Connector
5	Sidestand Switch
6	Fuel Injector 1
7	Fuel Injector 2
8	Fuel Injector 3
9	2nd Throttle Actuator
10	Idle Speed Control Actuator
11	Coolant Temperature Sensor
12	2nd Throttle Potentiometer
13	Throttle Potentiometer
14	Oil Pressure Switch
15	Fall Detection Switch
16	Ambient Pressure Sensor
17	Gear Position Sensor
18	Fuel Level Sensor
19	Inlet Air Temperature Sensor
20	MAP Sensor
21	Purge Valve
22	Ignition Coil 1
23	Ignition Coil 2
24	Ignition Coil 3
25	Lambda Sensor
26	Crankshaft Sensor
27	Diagnostic Connector
28	Instrument Assembly
29	Left Hand Switch Cube
30	Scroll Button
31	Starter Button
32	Engine Kill Switch
33	Front Brake Lever Switch
34	Alarm Connector (Accessory)
35	RH Front Indicator

Key	Item Description
36	LH Front Indicator
37	RH Rear Indicator
38	LH Rear Indicator
39	Cooling Fan Relay
40	Fuel Pump Relay
41	Fuel Pump
42	Cooling Fan
43	Number Plate Light
44	Rear Brake Lever Switch
45	Horn
46	Diode Pack (Indicators)
47	Accessories Socket
48	Heated Handlebar Grips Connector (Accessory)
49	GPS Connection (Accessory)
50	Rear Light Assembly
51	Brake Light
52	Rear Light
53	Starter Motor / Solenoid Assembly
54	Position Light
55	Headlight Assembly
56	Headlight Main Beam
57	Headlight Dip Beam
58	Accessory Light Connection
59	Right Hand Switch Cube
60	Accessories Light Switch
61	Headlight Dip Switch
62	Clutch Lever Switch
63	Horn Button
64	Direction Indicator Switch
65	Ignition Switch
66	Rectifier / Regulator
67	Fuse Box
68	Battery Connection Positive
69	Battery
70	Starter Relay

Circuit Diagram - Complete System - Rocket III Touring - without ABS

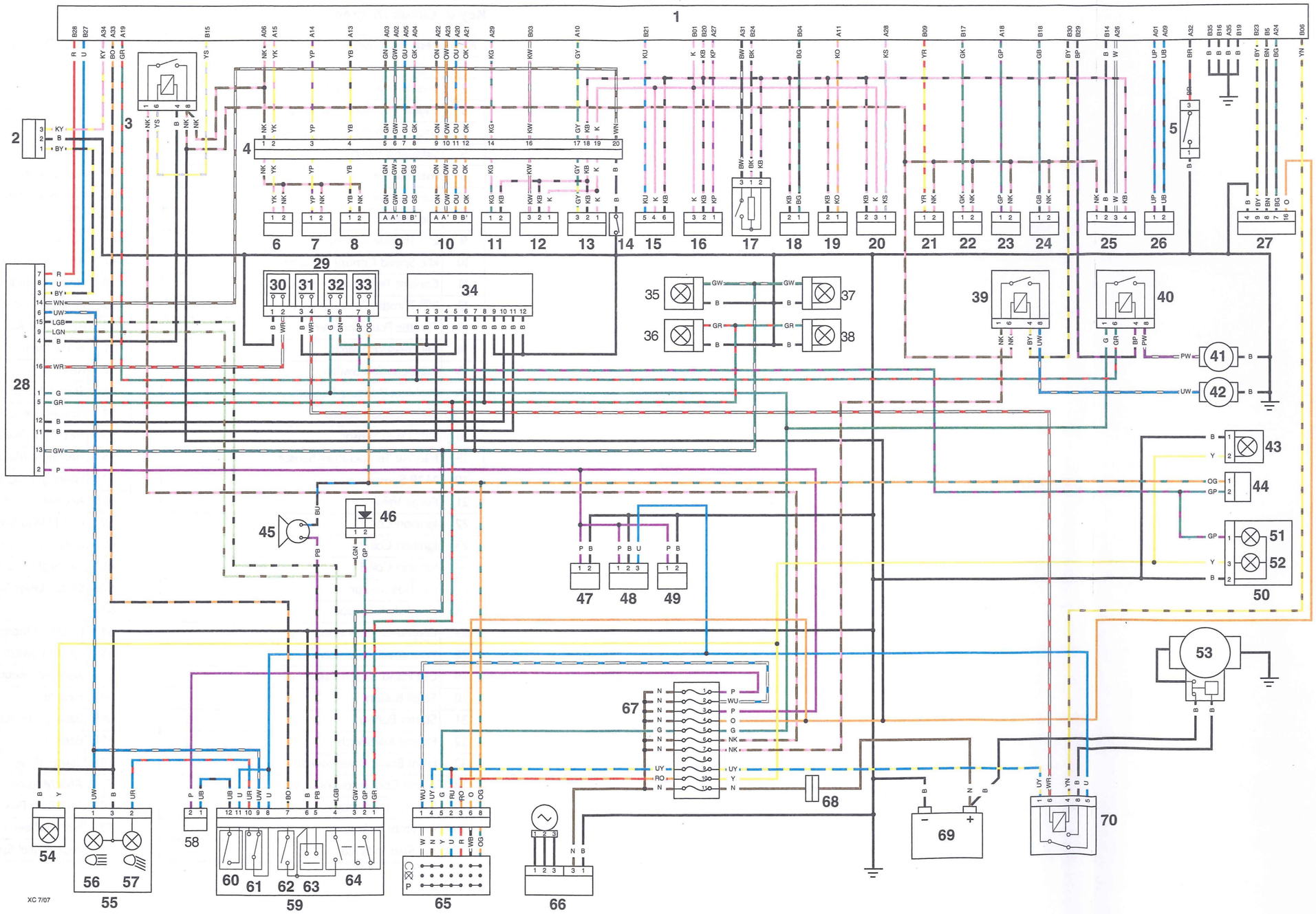

Complete System - Rocket III Touring - with ABS

Key to Circuit Diagram

Key	Item Description
1	Engine Control Module
2	Vehicle Speed Sensor
3	Engine Management Relay
4	Engine Sub-Harness Connector
5	Sidestand Switch
6	Fuel Injector 1
7	Fuel Injector 2
8	Fuel Injector 3
9	2nd Throttle Actuator
10	Idle Speed Control Actuator
11	Coolant Temperature Sensor
12	2nd Throttle Potentiometer
13	Throttle Potentiometer
14	Oil Pressure Switch
15	Fall Detection Switch
16	Ambient Pressure Sensor
17	Gear Position Sensor
18	Fuel Level Sensor
19	Inlet Air Temperature Sensor
20	MAP Sensor
21	Purge Valve
22	Ignition Coil 1
23	Ignition Coil 2
24	Ignition Coil 3
25	Lambda Sensor
26	Crankshaft Sensor
27	Diagnostic Connector
28	Instrument Assembly
29	Left Hand Switch Cube
30	Scroll Button
31	Starter Button
32	Engine Kill Switch
33	Front Brake Lever Switch
34	Alarm Connector (Accessory)
35	RH Front Indicator
36	LH Front Indicator
37	RH Rear Indicator

Key	Item Description
38	LH Rear Indicator
39	Cooling Fan Relay
40	Fuel Pump Relay
41	Fuel Pump
42	Cooling Fan
43	Number Plate Light
44	Rear Brake Lever Switch
45	Horn
46	Diode Pack (Indicators)
47	Accessories Socket
48	Heated Handlebar Grips Connector (Accessory)
49	GPS Connection (Accessory)
50	Rear Light Assembly
51	Brake Light
52	Rear Light
53	Starter Motor / Solenoid Assembly
54	Position Light
55	Headlight Assembly
56	Headlight Main Beam
57	Headlight Dip Beam
58	Accessory Light Connection
59	Right Hand Switch Cube
60	Accessories Light Switch
61	Headlight Dip Switch
62	Clutch Lever Switch
63	Horn Button
64	Direction Indicator Switch
65	Ignition Switch
66	Rectifier / Regulator
67	Fuse Box
68	Battery Connection Positive
69	Battery
70	Starter Relay
71	ABS Module
72	ABS Fuse Box
73	Front Wheel Speed Sensor
74	Rear Wheel Speed Sensor

Circuit Diagram - Complete System - Rocket III Touring - with ABS

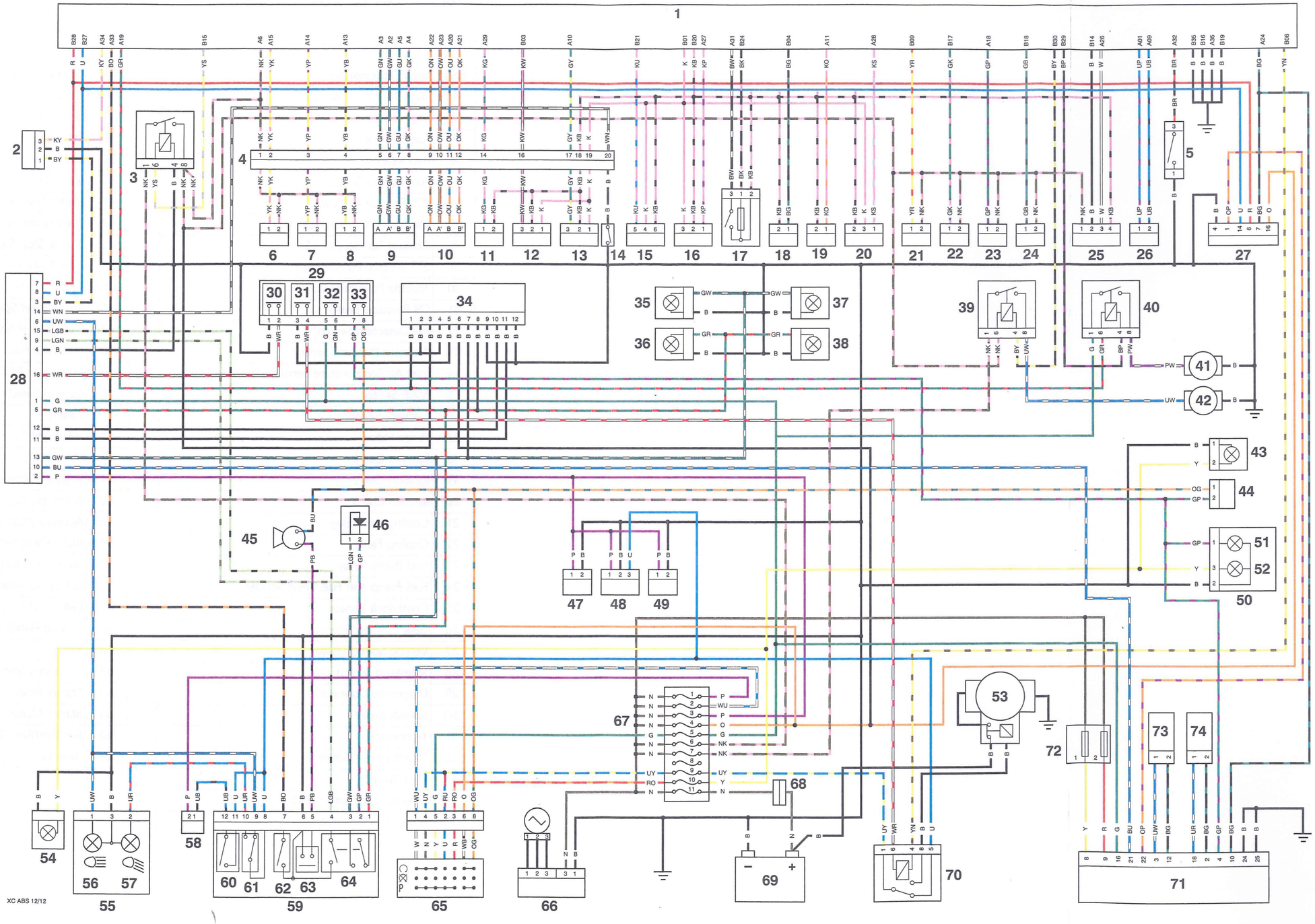

Complete System - Rocket III Roadster up to VIN 482857 and from VIN 500141 to VIN503166

Key to Circuit Diagram

Key	Item Description
1	Engine Control Module
2	Engine Sub-Harness Connector
3	Fuel Injector 1
4	Fuel Injector 2
5	Fuel Injector 3
6	2nd Throttle Actuator
7	Idle Speed Control Actuator
8	Coolant Temperature Sensor
9	2nd Throttle Potentiometer
10	Throttle Potentiometer
11	Oil Pressure Switch
12	Fall Detection Switch
13	Ambient Pressure Sensor
14	Inlet Air Temperature Sensor
15	MAP Sensor
16	Lambda Sensor
17	Purge Valve
18	Ignition Coil 1
19	Ignition Coil 2
20	Ignition Coil 3
21	Cooling Fan Relay
22	Cooling Fan
23	Fuel Pump Relay
24	Fuel Pump and Fuel Level Sender
25	Crankshaft Sensor
26	Gear Position Sensor
27	Vehicle Speed Sensor
28	Sidestand Switch
29	Diagnostic Connector
30	Speedometer
31	Tachometer
32	Clutch Lever Switch
33	Horn Switch
34	Direction Indicator Switch
35	Headlamp Dip Switch

Key	Item Description
36	Direction Indicator Unit
37	Licence Plate Lamp
38	Tail Lamp
39	Brake Lamp
40	Alarm Unit
41	Starter Switch
42	Front Brake Lever Switch
43	Engine Stop Switch
44	Rear Brake Lever Switch
45	ABS Module
46	Rear Wheel Speed Sensor
47	Front Wheel Speed Sensor
48	ABS Fuse Box
49	Main Fuse Box
50	Ignition Switch
51	Battery
52	Headlight 1
53	Headlight 2
54	Engine Management System Relay
55	Accessory Lights
56	Accessory Clock
57	Right Hand Indicator Front
58	Right hand Indicator Rear
59	Left Hand Indicator Front
60	Left Hand Indicator Rear
61	Heated Handlebar Grips (Accessory)
62	Horn
63	Accessory Socket
64	Starter Relay
65	Starter Motor
66	Rectifier/Regulator
67	Alternator

Circuit Diagram - Complete System - Rocket III Roadster - up to VIN 482857 and from VIN 500141 to VIN 503166

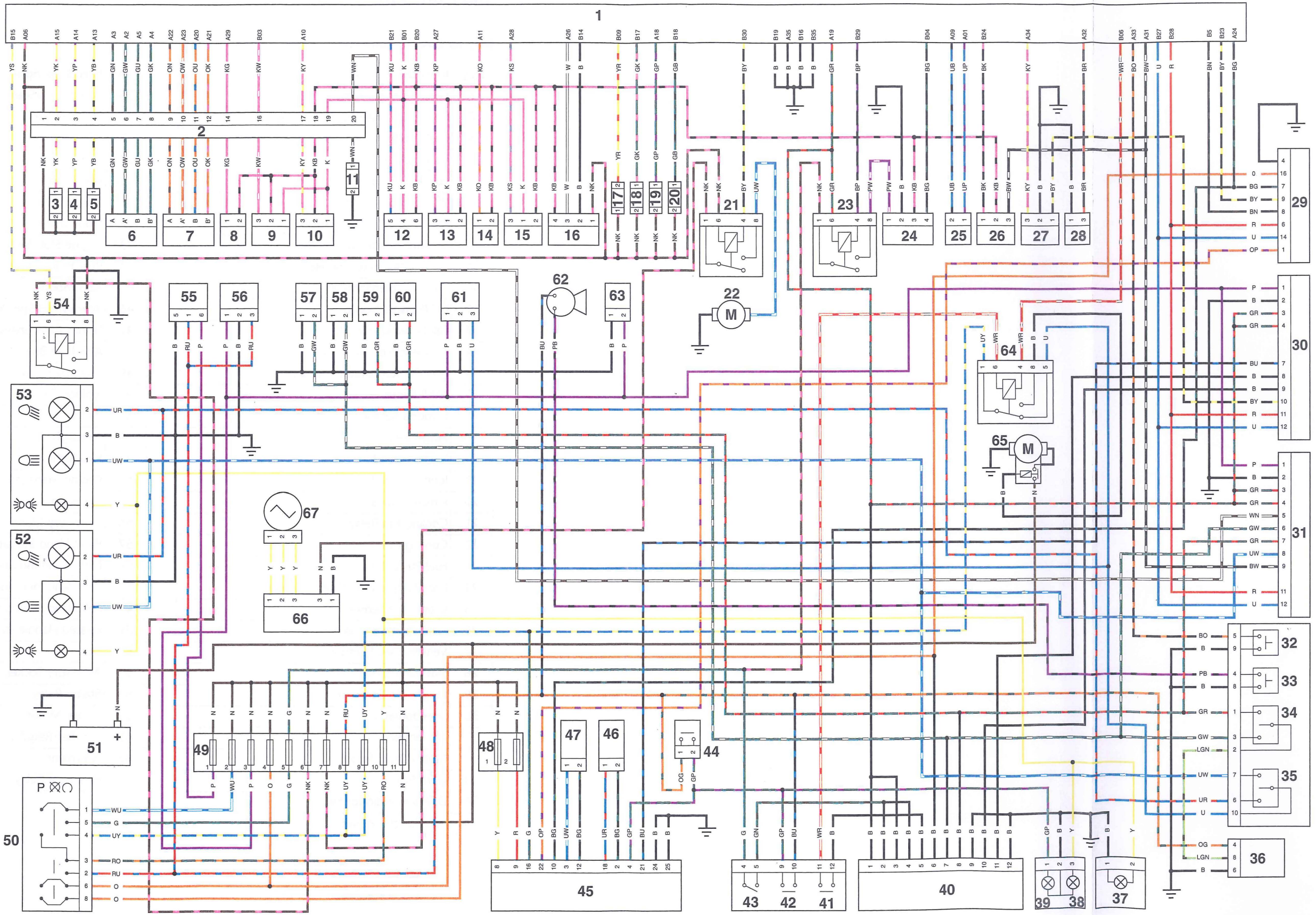

Complete System - Rocket III Roadster from VIN 482858 to VIN 500140 and from VIN 503167

Key to Circuit Diagram

Key	Item Description
1	Engine Control Module
2	Engine Sub-Harness Connector
3	Fuel Injector 1
4	Fuel Injector 2
5	Fuel Injector 3
6	2nd Throttle Actuator
7	Idle Speed Control Actuator
8	Coolant Temperature Sensor
9	2nd Throttle Potentiometer
10	Throttle Potentiometer
11	Oil Pressure Switch
12	Fall Detection Switch
13	Ambient Pressure Sensor
14	Inlet Air Temperature Sensor
15	MAP Sensor
16	Lambda Sensor
17	Purge Valve
18	Ignition Coil 1
19	Ignition Coil 2
20	Ignition Coil 3
21	Cooling Fan Relay
22	Cooling Fan
23	Fuel Pump Relay
24	Fuel Pump and Fuel Level Sender
25	Crankshaft Sensor
26	Gear Position Sensor
27	Vehicle Speed Sensor
28	Sidestand Switch
29	Diagnostic Connector
30	Speedometer
31	Tachometer
32	Clutch Lever Switch
33	Horn Switch
34	Direction Indicator Switch
35	Headlamp Dip Switch

Key	Item Description
36	Direction Indicator Unit
37	Licence Plate Lamp
38	Tail Lamp
39	Brake Lamp
40	Alarm Unit
41	Starter Switch
42	Front Brake Lever Switch
43	Engine Stop Switch
44	Rear Brake Lever Switch
45	ABS Module
46	Rear Wheel Speed Sensor
47	Front Wheel Speed Sensor
48	ABS Fuse Box
49	Main Fuse Box
50	Ignition Switch
51	Battery
52	Headlight 1
53	Headlight 2
54	Engine Management System Relay
55	Accessory Lights
56	Accessory Clock
57	Right Hand Indicator Front
58	Right hand Indicator Rear
59	Left Hand Indicator Front
60	Left Hand Indicator Rear
61	Heated Handlebar Grips (Accessory)
62	Horn
63	Accessory Socket
64	Starter Relay
65	Starter Motor
66	Rectifier/Regulator
67	Alternator
68	Headlight Relay

Circuit Diagram - Complete System - Rocket III Roadster - from VIN 482858 to VIN 500140 and from VIN 503167

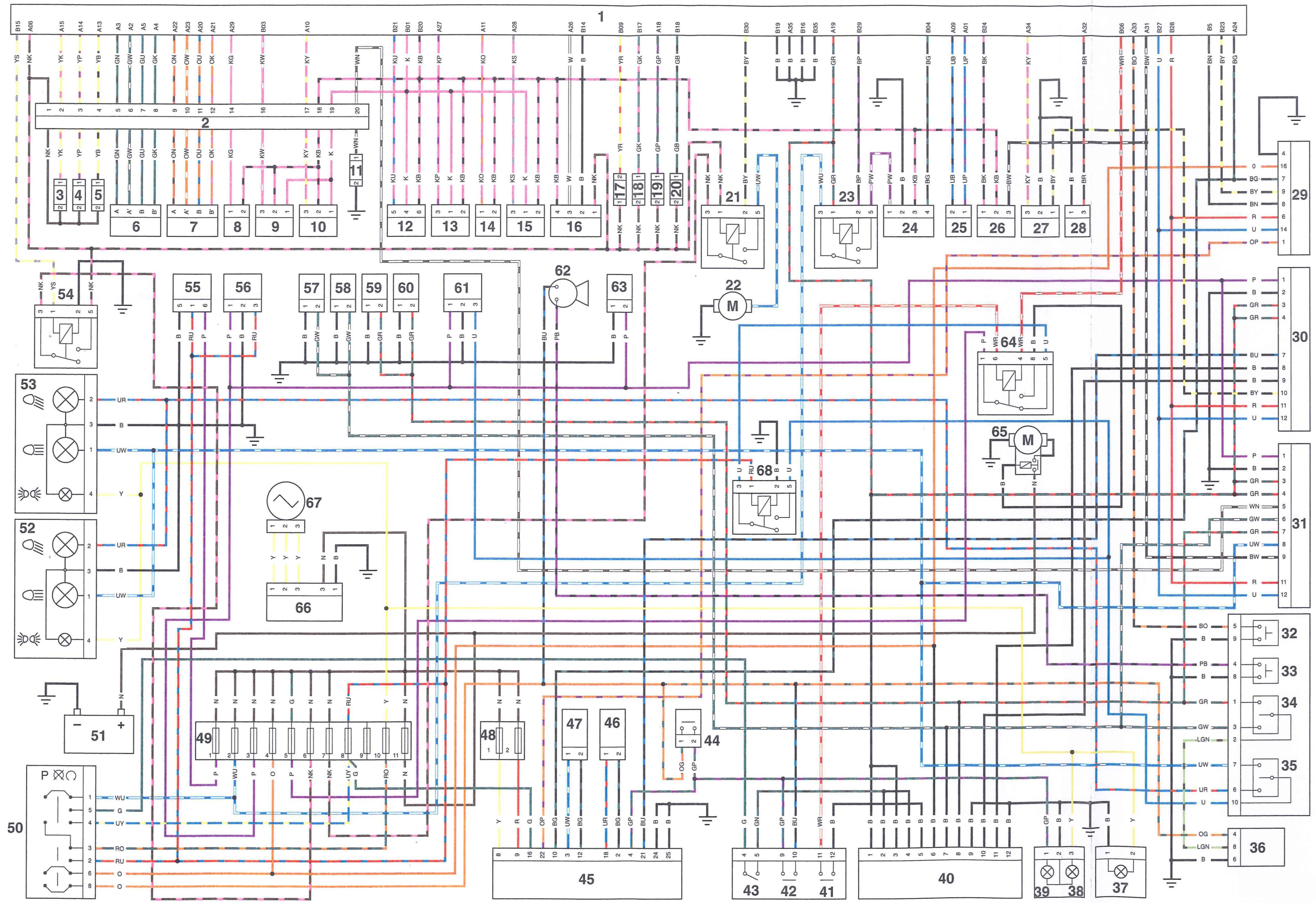

This page intentionally left blank